STUDY OF VARIOUS INFLUENCES ON THE EXTINCTION OF METHANE-OXYGEN DETONATIONS BY FINE POWDERS

BY

P. Laffitte, R. Delbourgo, J. Combourieu and J. C. Dumont
Laboratoire de Chimie Generale - Sorbonne - PARIS

Since our last contribution to this subject (1) a considerable impulse has been given, especially in the United States, to the Study of flame extinction, inhibition and related phenomena and an important effort has been made to coordinate investigations carried out in this field, to promote further research and to bring to the knowledge of workers throughout the world all possible information on the topic.

The existence of an extensive and exhaustive Survey Report on the Action of Flame Extinguishing Agents by R. FRIEDMAN and J.B. LEVY (2) together with the regular publication by the Fire Research Committee under the Sponsorship of the National /Research Abstracts and Reviews (3) will authorize us to cut short any historical development on this subject and refer the reader in search of such information to references 2 and 3.
/Research Council, of Fire ....

Experimental:

All our experiments were carried out on the mixture $CH_4 + 2\ O_2$ whose detonation velocity is well determined and of the order of 2300 m/s. Whereas previous investigations had been carried out with various mixture concentrations and in some cases with hydrocarbons other than methane we have this time extensively studied the behaviour of stoechiometric methane oxygen mixture at atmospheric pressure. The lay out of the apparatus allows for mixtures to be made out under constant volume in a mixing vessel where each constituent is introduced under its own partial pressure. Methane used is pure grade 99% and is dessicated before admission. Oxygen is delivered from commercial cylinders and is also treated by phosphorus pentoxide. The new and interesting part of the apparatus consists of the detonation tube and this will be described in some detail.

The detonation tube is made of perspex, sheathed by a plastic vinyl tubing. This device has proved effective in the sense that the tube is not shattered to pieces as was the case with glass tubes; reproducible and well defined donditions prevail at each experiment. The tube itself consists of two parts separated by a specially built slide valve which is mechanically triggered open synchronously with the ignition device. The tube is vertical with an inside diameter of 16 mm. The top part is 40 cm long and the bottom part 200 cm. The ignition is started at the bottom by a small detonator and the detonation travels upward.

The slide valve (figures 1 and 2) consists mainly of a thin glucinium bronze blade 3/10 th of a mm thick which either shuts the communication between the two tubes or instantaneously sets the complete aperture open. The shutter mechanism has a certain number of advantages mainly in the sense that being extremely thin the sudden opening of the slide introduces as little as possible perturbation to the mixture contained in the tube, also that the aperture of the

valve being exactly the tube diameter it therefore does not introduce any diameter variation at its passage, thirdly that it has been possible to use this device to introduce the pulverised material into the mixture by setting the weighed sample on the slide prior to any other step in the experiment then allowing the two parts of the tube to be first evacuated (the slide valve being vaccum tight through the use of O rings) then filled with the combustible mixture at the same pressure. In triggering the valve open and in setting the ignition started, the powder is set free to fall and disperse facing the detonation front travelling upward towards it.

The luminous phenomenon is recorded by the classical rotating drum camera on a Kodak Tri-x film and different recordings are given in figures 3 to 12. In particular it can be seen in figure 3 which relates to the detonation of $CH_4 + 2\,O_2$ mixture with no powder at all that important fundamental conditions are met with, namely that the detonation is well established and stable throughout the propagation and also that the slide valve which has been set open at the ignition instant has not introduced any perturbation.

The pulverised substance studied has been potassium bitartrate which had previously proved to be a good inhibitor and which has the advantage of being easily prepared in fine fractions and of not being too hygroscopic. Silica was also investigated in some cases in order to confirm previous results obtained with it and also to draw a parallel between the two samples.

The sample is first crushed mechanically and then sieved down to a fraction passing through 450 mesh. This fraction is further reduced by passing through a Roller Air Elutriator and Two fractions can be obtained in this way, one with an average diameter $< 10\,\mu$ and another with an average diameter $< 20\,\mu$. In each case the specific surface area has been measured by the Rigden air permeability method.

A relay, conveniently energised, is able to introduce a delay between the opening of the valve and the ignition of the mixture. This enables the operator either to obtain a simultaneous ignition and opening of the shutter setting the powder falling, or on the contrary to start the powder falling a few fractions of a second prior to ignition.

In acting in this way on the delay between the opening of the valve and the ignition one in facts acts upon the <u>dispersion</u> of the sample which if of course better dispersed if the delay is longer. In this way a powder (potassium bitartrate) of average particle size $< 10\,\mu$ is likely to disperse from 0 to 68 cm when the delay introduced varies from 0 to 0,6 sec.

Table I summarizes the results obtained with such a sample where r (average radius) is $< 10\,\mu \simeq 3{,}25\,\mu$ and where S is the specific surface area of the sample in cm^2/g ; in this case $S = 4680\ cm^2/g$.

TABLE I

t	0	0,15	0,2	0,3	0,4	0,48	0,5	0,6
m	1015	510	675	1050	1320	1590	1640	1970
n	10,2	2,59	3,43	5,33	6,70	8,07	8,32	10,0
Σ	9430	2390	3160	4910	6180	7440	7680	9220
h	-	10	14	24	37	51	54	68
σ	-	119	112	101	83	73	71	68
ν	-	1,29	1,22	1,10	0,901	0,787	0,767	0,732

m is the extinguishing mass, expressed in mg, i. e. the minimum weight of material to obtain the complete quenching of a detonation.

h is the height in cm attained by the falling powder.

σ is the total extinguishing surface area in cm^2, i. e. m. S.

cm^2/cm^3 is the average extinguishing density expressed in surface of the powder by volume unit of the cloud at the extinction point.

$= \frac{\Sigma}{V}$, (V = volume of the dust cloud = h x area of the croos-section of the tube).

This table shows a certain number of characteristic features:

1. The minimum quantity in weight necessary for extinction is that obtained with a delay of 0,15 sec, that is after the cloud has dispersed 10 cm downwards; if the delay is longer, the powder is more and more dispersed and the quantity necessary for extinction increases. A minimum dispersion is therefore necessary and is more effective than none. When dispersion increases over this critical value then the density of the cloud becomes smaller and a larger quantity becomes necessary to obtain the same effect.

2. Except in the case where $t = 0$, i. e. no dispersion, there seems to be a relation of the form:

$$m = k\ t$$

between the extinguishing mass and the delay.

The larger particles together with the smaller ones fall with respective velocities v and v' which are rapidly attained, the height of dispersion of the falling cloud being.

$$h = (v - v')\,t$$

$$\therefore\ m = k\,t \rightarrow \frac{m}{h} = \frac{k}{v - v'} = cte$$

Therefore the minimum extinguishing density would be constant.

This has led us to photograph the falling of the sample by recording the diffracted light along a slit parallel to the tube. Such a photograph is shown in figures 13 and 14.

Using the values of h we have calculated the average extinguishing densities per unit volume of combustible mixture expressed in number of millimoles ν per cc n being the total number of millimoles of powder contained in the tube.

3. The density σ decreases rapidly when t increases, reaching however a limit value.

Table II shows the experimental data obtained with a coarser sample, $< 20\,\mu$ the average diameter in this case is $8{,}4\,\mu$, the specific area S is 1820 cm^2/g.

TABLE II

t	0	0,15	0,2	0,3	0,4	0,48	0,5	0,6
m	2000	1000	1100	1570	2100	2725	2950	4000
n	10,2	5,08	5,58	7,97	10,7	13,8	15,0	20,3
Σ	3640	1820	2000	2860	3820	4960	5370	7280
h	-	12	14,5	28	38	50	53	72
σ	-	75,4	68,6	50,8	50,0	49,4	50,4	50,3
ν	-	2,11	1,91	1,42	1,40	1,38	1,41	1,40

These results show that the limit value of the density is attained with $t \simeq 0{,}3$ sec. Comparing Tables I and II one can see that m increases when h is increased, σ howewer decreases and tends towards a limit which is more rapidly

reached with a coarser particle than with a fine one.

Table III concerns a sample passing a 450 mesh without further reduction. The average radius is r ≃ 10μ and the specific surface area is 1570 cm^2/g

TABLE III

t	0	0,15	0,2	0,3	0,4	0,48	0,5	0,6
m	3045	1460	2875	3400	4240	4775	4825	5440
n	15,4	7,41	14,6	17,3	21,5	24,2	24,5	27,6
Σ	4780	2290	4510	5340	6660	7500	7580	8540
h	-	13,5	29	48,5	70	79	80	90
σ	-	84,4	77,4	53,7	47,3	47,2	47,1	47,2
ν	-	2,73	2,50	1,74	1,53	1,52	1,52	1,53

Compared with Table II this sample which is coarser than sample II shows an increase in m, minimum quantity necessary for extinction, h the dispersion height is also greater, σ and ν decrease when t increases, the limit values being reached as early as 0,3 sec.

Table IV summarizes the results obtained with silica, passing a 450 mesh, the specific area being S = 6,11 m^2/g

TABLE IV

t	0	0,15	0,2	0,6
m	2235	2155	2920	3250
Σm^2	13,7	13,2	17,8	19,9
h	-	-	-	100
σ m^2/cc	-	-	-	1990

In order to compare the experimental data obtained we have calculated the limit velocity of the dust particles, assuming each particle to be spherical and falling independantly. This has led us, for a delay of 0,6 sec, that is for the greater possible dispersion to a value of

$r \leq 83\mu$

in order to attain a point situated 1 m below the shutter in 0,6 sec. The powder therefore forms clusters of an average radius of 83 microns.

Discussion:

A certain number of useful comments can be made by the careful observation of the photographic recordings.

Figure 3: shows a detonation free of powder passing through the slide valve (black space at the upper part) without any disturbance. The interval between two black marks at the top represents 10 cm.

Figure 4: shows a detonation with 2000 mg of potassium bitartrate $<10\mu$ - no delay between the opening of the shutter and the ignition. Practically all the powder is still at the level of the slide valve when the detonation front reaches it, an attenuation of the velocity is apparent passed the valve before the detonation carries on its way.

Figure 5 : Same conditions with 2015 mg instead of 2000 mg. Extinction is practically obtained at the valve, a small flame is seen to propagate at a reduced velocity after the passage of the valve.

Figure 6 Delay 0,3 sec between opening the shutter and ignition, m = 1040 mg; the luminous part of the recording immediately before the slide valve coincides with the position of the dust front as measured by the diffracted light method (fig.14). This is immediately followed by a dark zone where the velocity is seen to be reduced. The quantity m being less than that necessary for extinction the wave passes through the shutter and is seen to propagate at the upper part of the tube with a reduced velocity before the detonation is reformed.

Figure 7 shows the same phenomena, 10 mg over the 1040 mg used in figure 6, extinction is obtained. The same luminosity and velocity reduction as in figure 6 are observed.

Figures 8, 9 and 10 are a series with a delay of 0,4 sec where the luminosity is seen to appear earlier in the recording (the delay being longer the powder has travelled further) the same velocity reduction is observed before extinction is obtained (fig. 10).

Figure 11 concerns a still longer delay (0,5 sec) the luminosity starts earlier.

Figure 12 concerns silica, 2150 mg, 0,2 sec. This recording is interesting in the sense that two re-ignitions are observed none of them leading to the reformation of a true detonation before the end of the tube is reached.

Figures 13 and 14 are relevant to powder samples falling along the tube (diffracted light photographs) each black interval is 10 cm distant from the next one. Figure 13 has been obtained with a delay of 0,6 with potassium bitartrate $< 450\mu$. The density of the cloud appears to be maximum towards the centre. Figure 14 is for a delay of 0,3 s , the powder has reached 50 cm, the distribution is better than in figure 13.

Conclusion:

The general conclusions that can be drawn from the observation of the data presented are the following.

1. Extinction always preceeds through the same reproducible film of events. A reduction of velocity is always observed after the wave has travelled for some length through the dust cloud. During this propagation a strong excitation of the luminosity is observed. This is immediately followed by an important reduction in luminosity (probably due to the cooling effect). According to whether the dust quantity is sufficient or not to produce extinction the wave will either proceed with a reduced velocity and reform a detonation further along the tube or proceed as an unstable deflagration or else become completely extinguished.

These events are perfectly reproducible and the inhibition mechanism is one of dissociation of the combustion and detonation waves, the effect being to reduce the flame velocity either operating as an important heat sink, reducing the temperature or by any other mechanism such as a chain breaking one (4), to the point where the flame cannot reaccelerate enough to reform the detonation.

2. The effect of dispersion shows that a minimum dispersion is necessary to obtain minimum quantities of material. In the case of our experiments a time lag of 0,15 sec has proved to be optimum. This corresponds to a height of dispersion of 10 cm below the slide valve.

Table I II and III show that the ratio $\frac{\Sigma}{V}$, the average extinguishing density σ cm^2/cm^3 tends towards a limit value, more or less rapidly attained according to the average particle size.

3. The fine particles remain nearest the slide valve while the coarser ones fall more rapidly. Extinction is only obtained if propagation through the cloud can reach the fine portion of the sample.

4. Potassium bitartrate is definitely a better inhibitor than silica with which too large quantities are necessary to be significant.

We have in this work endeavoured to obtain definite experimental conditions and reproducible results. In studying one sole mixture (Stoechiometric methane oxygen) and in extensively examining the behaviour of one sole inhibitor (namely potassium bitartrate) we have willingly limited this paper to the influence of dispersion on the extinguishing phenomenon. Other factors will be studied systematically in the near future.

The authors' thanks are due to R. FOULATIER, Collaborateur technique au CNRS, for his help and ingenuosity in building the slide valve and other parts of the equipment used.

References

1. P. LAFFITTE and R. BOUCHET
Seventh Symposium (International) on Combustion, Butterworths London, P.504, 1959.

2. R. FRIEDMAN and J.B. LEVY
Survey of fundamental Knowledge of mechanisms of action of Flame extinguishing Agents.

Wright Air Development Centre Technical Report 56-568 (1957)
Supplement I (1958) Supplement II (1959)

3. Fire Research Abstracts and Reviews - Quarterly Reviews National Academy of of Sciences-National Research Council.

4. A. Van TIGGELEN
Colloque sur la combustion et la cinétique des réactions en phase gazeuse CNRS 1948 p.159.

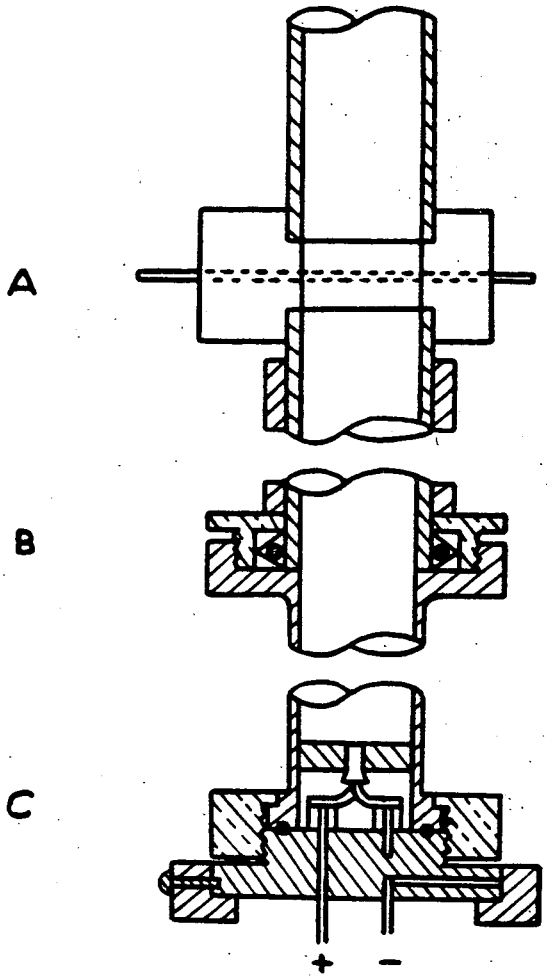

Figure 1

A. Slide Valve
B. Tube Connection
C. Ignition Plug

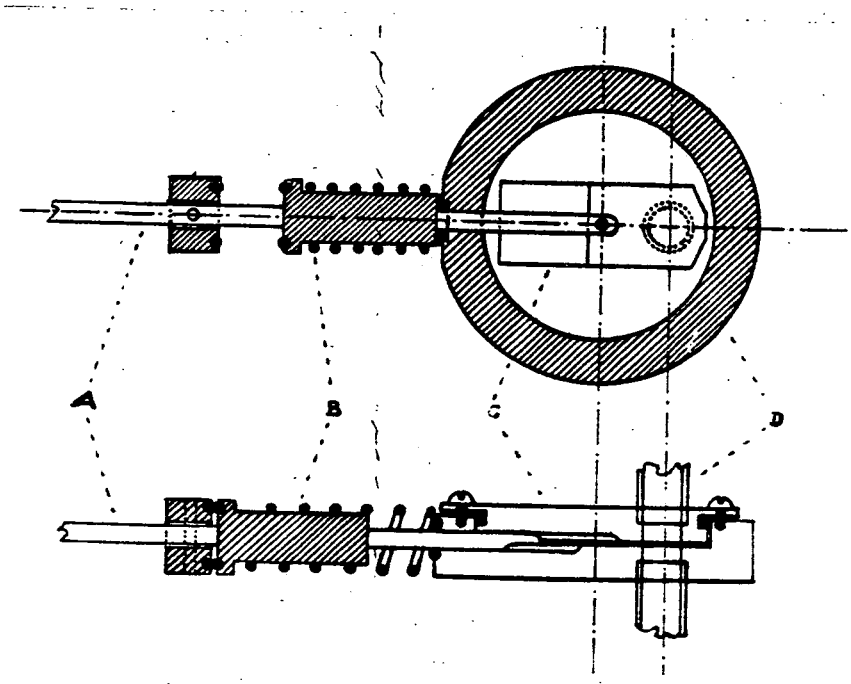

Figure 2

SLIDE VALVE

A. Connecting Rod
B. Spring
C. Slide Shutter
D. Detonation Tube

Top

Space ⟶

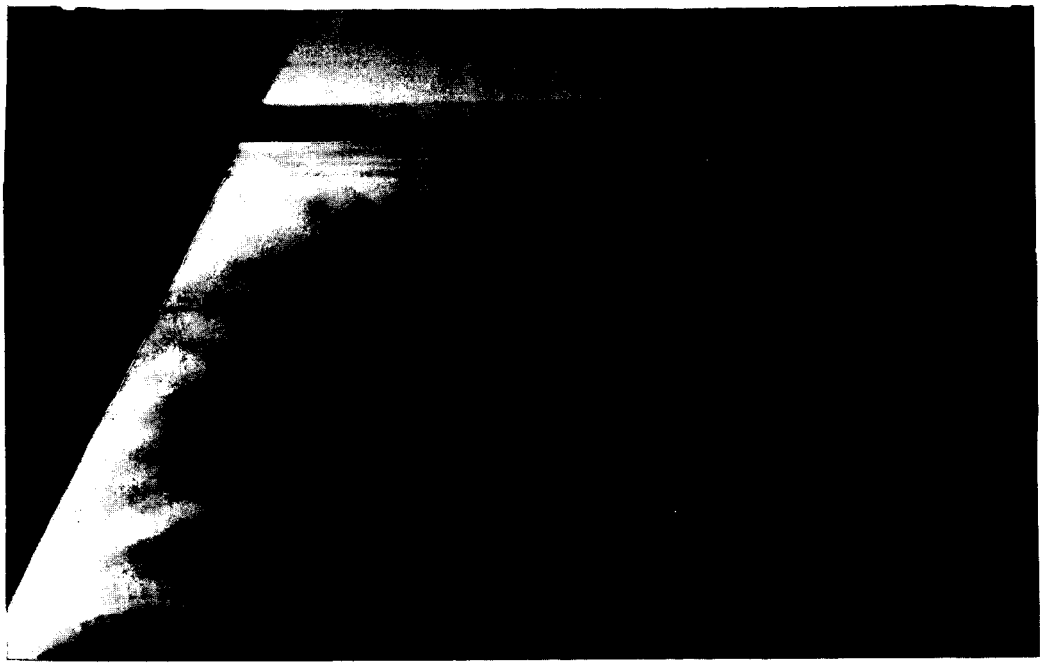

Bottom

Time ⟶

Figure 3

Top

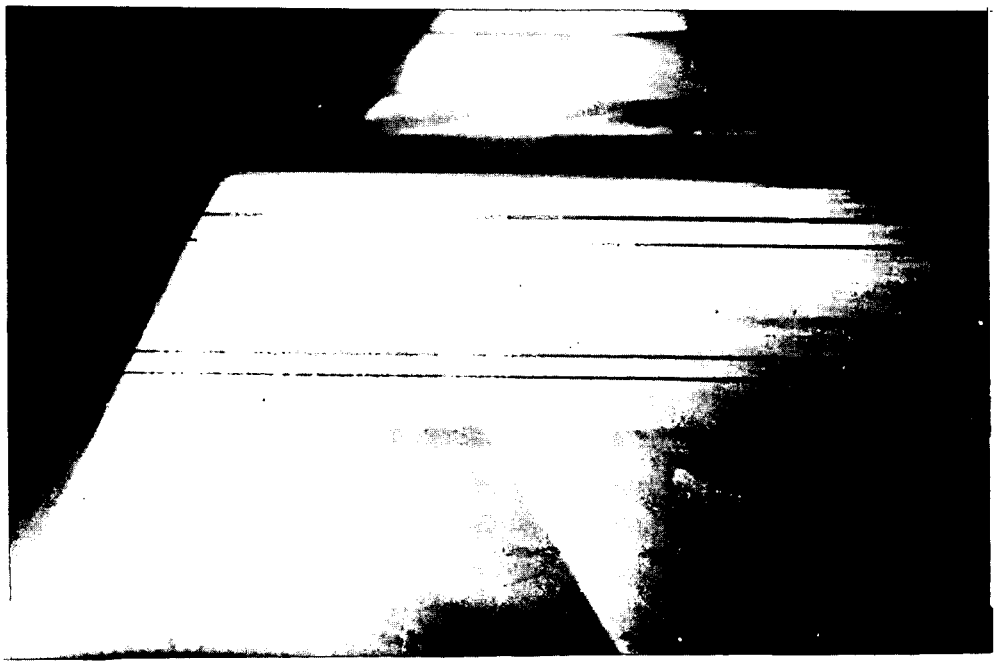

Bottom

Figure 4

Top

Space →

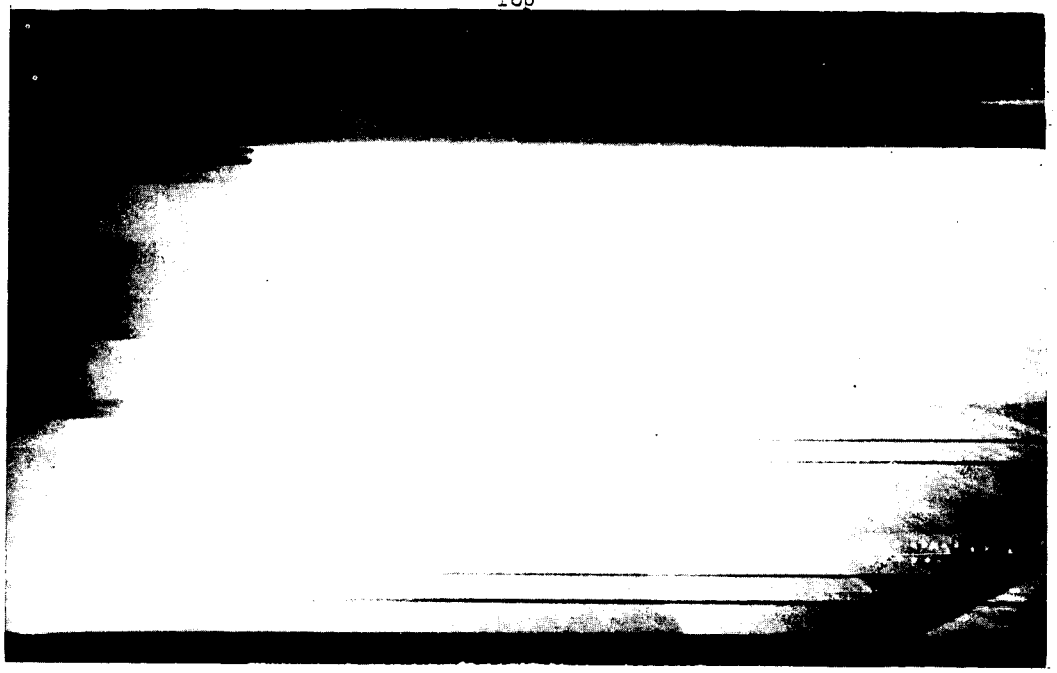

Bottom

Time →

Figure 5

Top

Bottom

Figure 6

Top

Space

Bottom

Time

Figure 7

Top

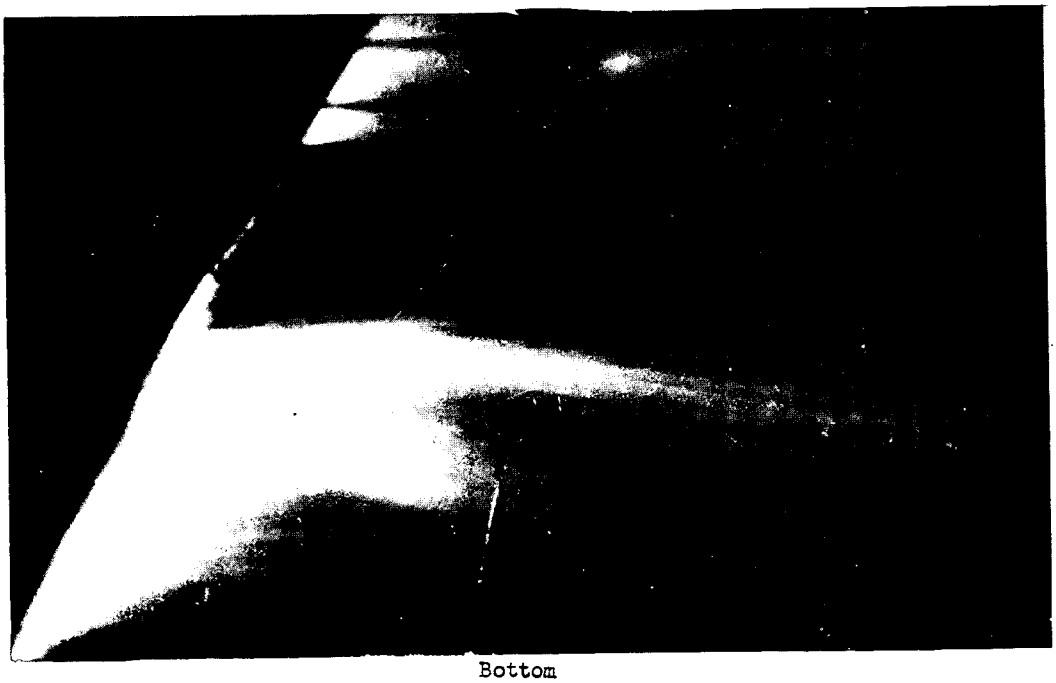

Bottom

Figure 8

Top

Space →

Bottom

Time →

Figure 9

Top

Bottom

Figure 10

Top

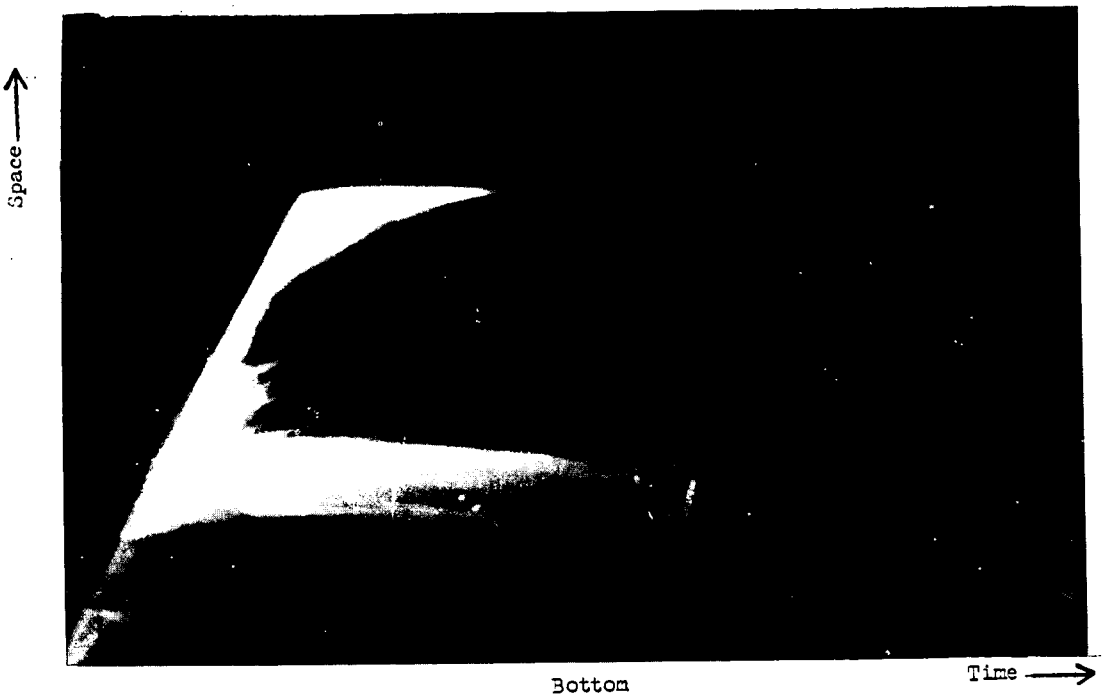

Bottom

Figure 11

Top

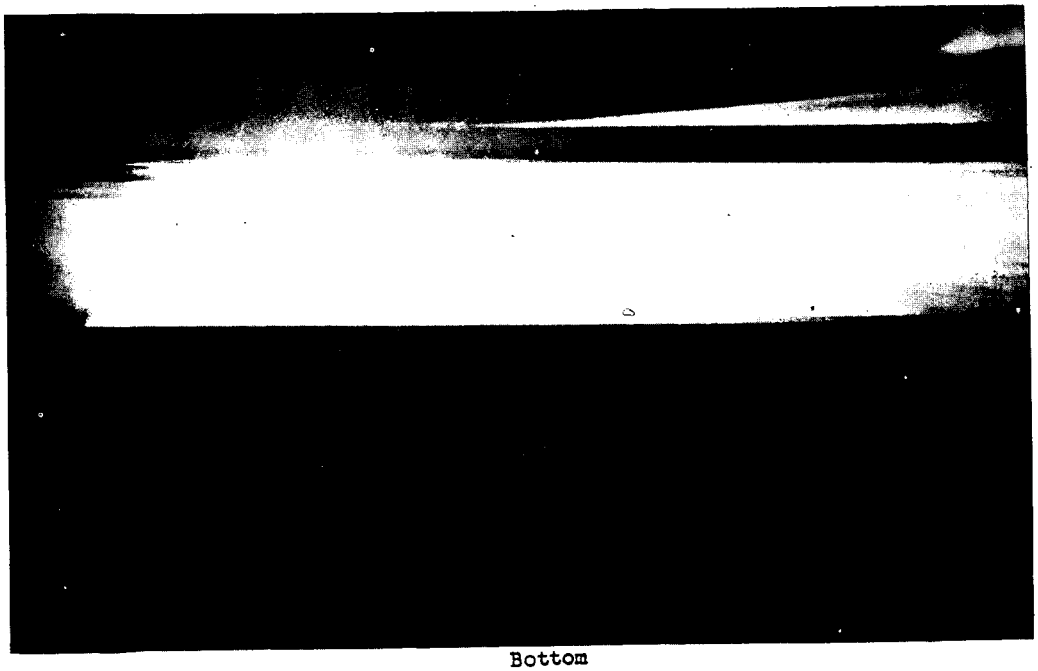

Bottom

Figure 12

Space →

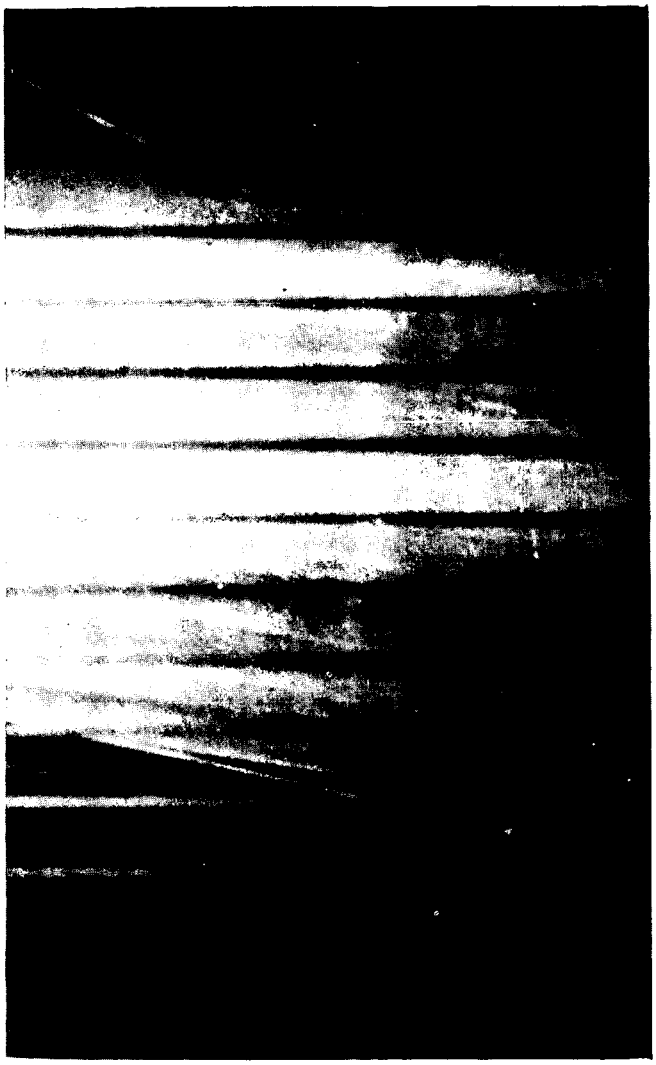

Bottom

Time →

Figure 13

Bitartrate K
450 Mesh

M = 5440 Mg
Σ = 8570
t = 0.6 ± 0.1 Sec.

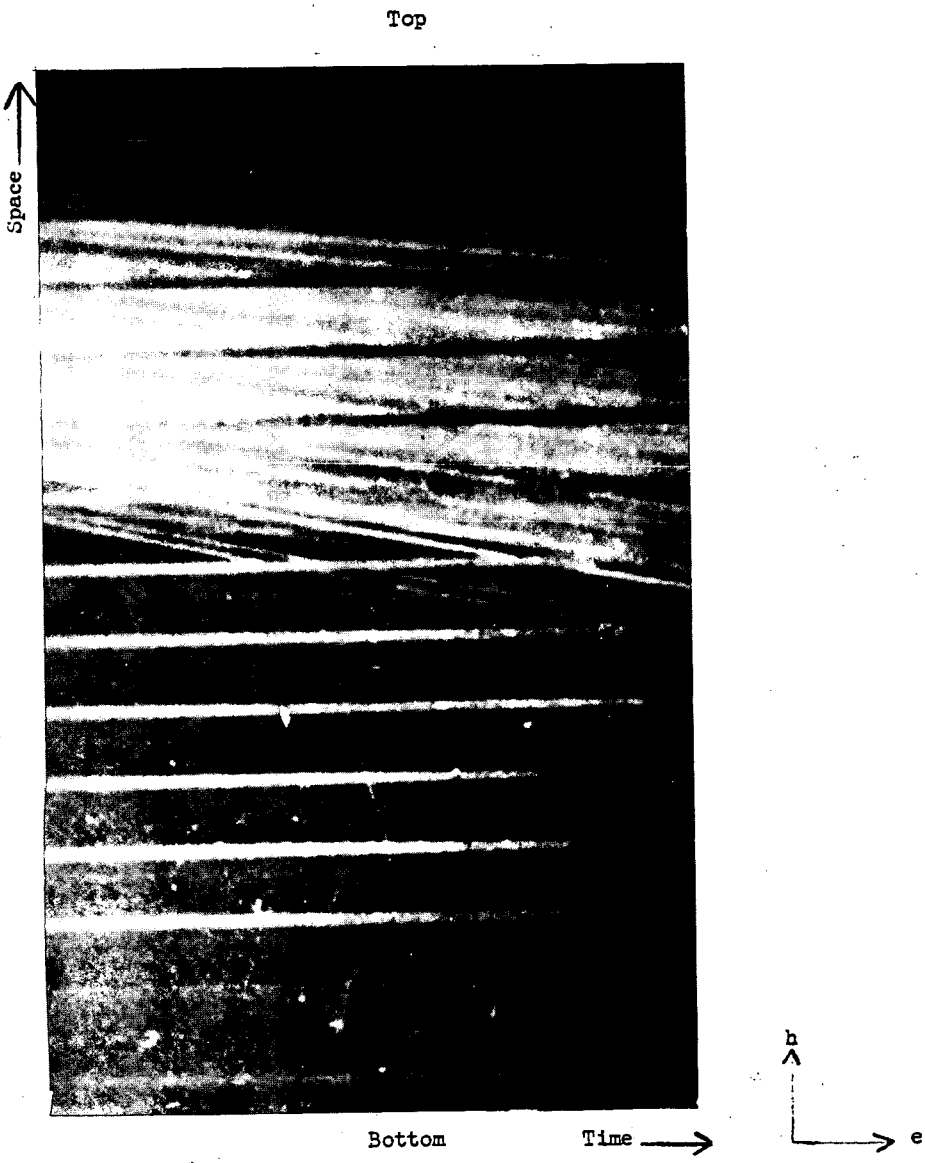

Figure 14

Bitartrate K
450 Mesh
t ≥ 0.3 Sec.