Evaluation of Processes and Costs of Separating Mixtures of Hydrogen and Methane

W. P. Haynes, J. W. Mulvihill, S. Katell, and J. H. Field
U. S. Bureau of Mines, 4800 Forbes Avenue,
Pittsburgh, Pennsylvania 15213

INTRODUCTION

In the hydrogenation of coal at pressures of 60 to 400 atmospheres to produce synthetic fuel gas, the product contains 5 to 80 percent methane, with the balance principally hydrogen (7, 20).[1/] Small quantities of carbon oxides, sulfur compounds, higher molecular weight hydrocarbons including aromatics, and water vapor constitute the remainder of the gas. By separating the hydrogen from the methane and increasing the methane content of the product to about 90 percent, the heating value can be increased to 900 Btu per cu ft. A further benefit of separation is that the hydrogen is made available for recycle to the hydrogenation reactor (36).

The objectives of this paper are to determine whether separation is economically feasible by existing techniques and to determine the effect of the methane concentration on the cost of separation. This latter information is valuable for guiding the direction of research on hydrogasification, because some operating techniques inherently produce gases of low methane content.

Five types of processes are applicable for separating mixtures of methane and hydrogen as follows:

1. Adsorption by solid agents (4, 6, 15, 17, 18, 25, 35):
   a. Activated carbon.
   b. Molecular sieves, silica gel, and activated alumina.
   c. Fuller's earth (hydrous Al-Mg-silicate).

2. Absorption by liquids (16, 31):
   a. High molecular weight oils--gas oil.
   b. Low molecular weight hydrocarbons--propane and butane (at low temperature).

3. Diffusion (2, 13, 21, 22, 26, 28, 32, 34):
   a. Metallic membranes and tubes:
      (1) Palladium and palladium-silver.
      (2) Nickel.
   b. Plastic membranes:
      (1) Polyvinyl acetate.
      (2) Polystyrene.
      (3) Ethyl cellulose.

1/ Underlined numbers in parentheses indicate items in the bibliography at the end of this paper.

c. Mechanical means:
   (1) Perforated plates and screens.
   (2) Centrifugal devices.
d. Thermal diffusion.

4. Refrigeration and liquefaction of methane (1, 12, 19, 23):
   a. Principally compression-expansion systems:
      (1) Joule-Thompson effect.
      (2) Expansion engines.
   b. Cascade type using auxiliary refrigerants:
      (1) Vapor recompression system.
      (2) Expansion engines.

5. Formation of methane hydrate (29).

For treating the large quantities of gas for a 90 million cu ft per day plant, adsorption, absorption, and liquefaction have been selected as being most practical. Diffusional systems were ruled out because low gas throughput is inherent, requiring a tremendous number of multiple units of high capital cost. The formation of methane hydrate was eliminated because published information indicated that the space and initial refrigeration requirements were several times greater than for liquefaction processes (29).

Adsorption with active carbon was selected over molecular sieves because the adsorptive capacity of carbon is considerably greater at high partial pressures of methane (15, 18, 25, 35). Moreover, the cost of the activated carbon is less than one-half that of sieves. A moving-bed adsorption operation was arbitrarily selected for this study instead of a fixed-bed system. However, fixed-bed adsorption accompanied by regeneration by pressure letdown offers a very promising method of separation according to costs reported for purifying hydrogen (8).

With regard to liquid absorption, although methane is highly soluble in liquid propane and butane, gas oil was chosen as solvent over liquid propane and butane because it can be used at ambient temperature (16). The lower molecular weight materials operate at low temperatures requiring some refrigeration. Finally a cascade system was chosen for separation by liquefaction because its thermodynamic efficiency is greater than compression-expansion systems (1). Higher capital costs were anticipated for a cascade system, however.

Plant capacity was set at 90 million std cu ft per day of high-Btu gas containing about 90 percent methane. Cases 1 through 3, respectively, designate the methane content of the feed gas at 5, 20, and 50 percent. The feed gas, obtained from raw hydrogasification product gas after the removal of most of the carbon dioxide and hydrogen sulfide, is assumed to have the following composition:

	Case 1	Case 2	Case 3
CH_4	5.0	20.0	50.0
H_2	94.25	77.78	44.84
C_2H_6	0.05	0.2	0.5
CO	.2	.8	2.0
CO_2	.2	.2	0.2
N_2	.2	.8	2.0
C_6H_6	.04	.16	0.4
H_2O	.06	.06	.06
H_2S (trace)	.0016	.0016	.0016

At these concentrations, the effects of the contaminants (gases exclusive of methane and hydrogen) are unknown with respect to the adsorptive capacity of charcoal, and are considered negligible in oil absorption. The design assumptions, therefore, neglect the presence of contaminants in the moving-bed adsorption plant and in the case of the oil absorption plant arbitrarily assign ethane, carbon dioxide, benzene, water, and hydrogen sulfide contaminants to the methane product stream, and carbon monoxide and nitrogen contaminants to the hydrogen byproduct stream. In the case of the liquefaction process, prepurification of the feed gas is mandatory and is considered in this evaluation. Inlet and outlet conditions for all separation schemes were held nearly constant at a pressure level of about 1,500 psia and at ambient temperatures.

The estimate of the working capital comprises a 30- to 60-day supply of makeup material, 3 months payroll overhead, 3 months operating supplies, and 4 months indirect cost, fixed charges, spare parts, and miscellaneous expenses. Basic rates for operating costs were:

Electricity	$0.008	per kwhr
Cooling water	.01	per 1,000 gal
Direct labor:		
Operating labor	$2.75	per man-hr
Supervision	15	percent of operating labor
Plant maintenance:		
Labor	$6,000	per man-yr
Supervision	20	percent of maintenance labor
Material	50	percent of maintenance labor
Payroll overhead	18.5	percent of payroll
Operating supplies	20	percent of plant maintenance
Indirect cost	50	percent of labor
Fixed costs:		
Taxes and insurance	2	percent of total plant cost
Depreciation	5	percent of total plant cost and interest during construction

Cost rates for items such as steam and raw material vary and are presented for each process.

MOVING-BED CHARCOAL ADSORPTION PROCESS

Commercial-scale moving-bed charcoal adsorbers have been used in the separation of light hydrocarbon gases from refinery gas and, in special tests (5),

have demonstrated the feasibility of separating methane-hydrogen mixtures. The distinctive feature of the process is its use of a moving bed of activated carbon for the selective adsorption of gases and vapors.

Data by Frolich and White (15) on the adsorption of mixtures of methane and hydrogen on activated charcoal at pressures ranging up to 140 atmospheres show that methane is selectively adsorbed with virtual exclusion of hydrogen. A flowsheet of the separation of methane-hydrogen mixtures by the moving-bed charcoal adsorption process at essentially 1,500 psi is shown in figure 1. Feed gas enters the downward-flowing bed of activated carbon, about 12 to 30 Tyler mesh size, at the adsorption zone where the methane is adsorbed and carried down into the rectification zone. The methane-free hydrogen flows upward and leaves the adsorber at the top of the adsorption zone. Part of the byproduct hydrogen continues upward through the cooling zone to dry and cool the incoming carbon. Much cooling of the carbon is done by desorption of residual water vapor. Cooling water tubes provide additional cooling. Hot hydrogen from the cooling zone is cooled and dehumidified in a cooler-condenser.

Activated carbon containing adsorbed methane flows downward by gravity from the adsorption zone into the rectification zone where a reflux stream of methane desorbs the small quantity of hydrogen left on the carbon. The activated carbon then flows to the stripping zone where methane is stripped from the carbon by steam at 650° F. A Dowtherm heating system provides additional heat to the stripping zone.

The activated carbon, saturated with water vapor but stripped of methane and hydrogen, is returned to the top of the adsorber column by a gas lift conveying system. A small stream of carbon is stripped with 800° F steam to remove heavy hydrocarbons and maintain a high methane capacity.

The methane and steam flow from the adsorber column to a cooler-condenser where the methane is cooled and the steam is condensed. The methane is then blended with untreated feed gas to give the final product containing 90 percent methane and 10 percent hydrogen.

The size of an adsorber column is 5 ft ID by 81 ft high, with 6-1/2-in wall thickness. The number of columns required is 57, 14, and 6 for cases 1 through 3, respectively.

In the design of the process, published isotherm data (18) for methane adsorbed on activated carbon was extrapolated to estimate the methane adsorbed at high partial pressures. From comments by Kehde et al (24), carbon attrition rate was assumed to be 0.005 percent of the rate of carbon recirculation. Additional unit costs were:

Fuel	$0.25 per million Btu
Steam--1,510 psig, 800° F	.35 per thousand lb
Steam--1,510 psig, 650° F	.29 per thousand lb
Steam--1,485 psig, 600° F	.27 per thousand lb
Activated carbon	.40 per lb

A breakdown of the capital investment costs and operating costs for the moving-bed adsorption process is shown, respectively, in tables 1 and 2. The

TABLE 1.- Total estimated capital requirements, moving-bed charcoal adsorption process

Item	Case 1, 5 percent methane		Case 2, 20 percent methane		Case 3, 50 percent methane	
	Dollars	Percent	Dollars	Percent	Dollars	Percent
Installed equipment	36,363,600	77.5	11,153,500	76.9	5,650,700	76.9
Plant facilities	3,636,400	7.7	1,115,400	7.7	565,100	7.7
Plant utilities	4,800,000	10.2	1,472,300	10.2	745,900	10.1
Total construction	44,800,000	95.4	13,741,200	94.8	6,961,700	94.7
Initial requirements	903,800	1.9	238,500	1.6	102,000	1.4
Total plant cost (insurance and tax bases)	45,703,800	97.3	13,979,700	96.4	7,063,700	96.1
Interest during construction	914,100	2.0	279,600	1.9	141,300	1.9
Subtotal for depreciation	46,617,900	99.3	14,259,300	98.3	7,205,000	98.0
Working capital	332,100	.7	240,700	1.7	145,000	2.0
Total investment	46,950,000	100.0	14,500,000	100.0	7,350,000	100.0

TABLE 2.- Estimated annual operating costs, moving-bed charcoal adsorption process

	Case 1, 5 percent methane		Case 2, 20 percent methane		Case 3, 50 percent methane	
	Dollars	Percent	Dollars	Percent	Dollars	Percent
Direct cost:						
Raw materials and utilities	2,696,900	38.0	1,176,000	41.3	809,000	44.9
Direct labor	332,500	4.7	193,900	6.8	138,600	7.7
Plant maintenance	306,000	4.3	183,600	6.4	132,600	7.4
Payroll overhead	101,500	1.4	59,800	2.1	43,000	2.4
Operating supplies	61,200	0.9	36,700	1.3	26,500	1.5
Total direct cost	3,498,100	49.3	1,650,000	57.9	1,149,700	63.9
Indirect cost	349,900	4.9	207,100	7.3	148,900	8.3
Fixed cost:						
Taxes and insurance	914,100	12.9	279,600	9.8	141,300	7.8
Depreciation	2,330,900	32.9	713,000	25.0	360,300	20.0
Total operating cost	7,093,000	100.0	2,849,700	100.0	1,800,200	100.0
Operating cost per thousand scf of product gas	0.239		0.096		0.061	

adsorber columns were the highest cost equipment items with their installed costs amounting to 71, 62, and 55 percent of total installed equipment costs for cases 1 through 3, respectively; the cost of steam, the highest direct cost item, respectively amounts to 23, 25, and 27 percent of total operating cost.

OIL ABSORPTION PROCESS

The oil absorption process uses an oil enrichment step patented by Davis (10) because existing solvents are not selective enough to get the desired separation by conventional absorption-stripping techniques. By the enrichment step, methane-rich oil can be further enriched with methane to insure getting a methane concentration of more than 90 percent in the flashed and stripped product gases. A flowsheet of the oil absorption process is shown in figure 2 for case 1.

Feed gas enters the bottom of the primary absorber, countercurrent to the lean oil passing downward through the tray column. Absorption occurs at 100° F with a total system pressure of 1,500 psia. Effluent gas from the primary absorber, which is mainly hydrogen, is combined with effluent hydrogen from a secondary absorber. Enriched oil from the primary absorber enters a secondary absorber at a suitable point for further enrichment with methane.

The secondary absorber selectively strips hydrogen from--and adds methane to--the incoming methane-enriched oil by forcing absorption of additional methane-rich gas entering at the bottom. Lean oil also enters the top of the secondary absorber to remove residual methane from the liberated hydrogen. The methane-rich oil leaves the bottom of the secondary absorber and passes through an oil turbine where approximately 46 percent of the theoretical expansion work is recovered by pressure letdown of the liquid and expansion of dissolved gases. Rich oil from the turbine enters a flash drum at 100° F and 15 psia. Flashed methane is removed and recompressed to 1,500 psia. Some of this gas is sent to the secondary absorber. The remainder combines with methane-rich gas from the stripping column to form the high-Btu product gas.

Rich oil leaving the flash drum is heated to 240° F prior to entering the top of the stripping column where the oil is stripped of absorbed gases by steam. Lean oil from the stripping column is recirculated through a heat exchanger and a cooler and is finally pumped to both absorbers. When the methane concentration in the feed gas is increased from 20 percent to 50 percent, as in going from case 2 to case 3, the flash drum pressure and the oil feed to the secondary absorber are appropriately modified to take advantage of the reduced need for oil enrichment.

A 200 molecular-weight oil was selected as the absorbent. Data of Dean and Tooke (11) and of Sage and Lacey (30) were used for estimating values of K for the solubility of hydrogen and methane, respectively.

The inside diameter and the wall thickness of both the primary and secondary absorbers were 7.5 ft and 6.5 in., respectively. In case 1 the

TABLE 3. Total estimated capital requirements, oil absorption process

Item	Case 1, 5 percent methane		Case 2, 20 percent methane		Case 3, 50 percent methane	
	Dollars	Percent	Dollars	Percent	Dollars	Percent
Installed equipment	318,434,700	78.4	113,647,600	78.1	29,167,500	78.4
Plant facilities	31,843,500	7.8	11,364,800	7.8	2,916,800	7.8
Plant utilities	42,033,400	10.4	15,001,500	10.3	3,850,100	10.4
Total construction	392,311,600	96.6	140,013,900	96.2	35,934,400	96.6
Initial chemical requirements	2,724,400	0.7	1,580,400	1.1	240,000	0.6
Total plant cost (insurance and tax bases)	395,036,000	97.3	141,594,300	97.3	36,174,400	97.2
Interest during construction	7,900,700	1.9	2,831,900	2.0	723,500	1.9
Subtotal for depreciation	402,936,700	99.2	144,426,200	99.3	36,897,900	99.1
Working capital	3,340,300	0.8	1,073,800	0.7	318,100	0.9
Total investment	406,277,000	100.0	145,500,000	100.0	37,216,000	100.0

TABLE 4.- Estimated annual operating costs, oil absorption process

	Case 1, 5 percent methane		Case 2, 20 percent methane		Case 3, 50 percent methane	
	Dollars	Percent	Dollars	Percent	Dollars	Percent
Direct cost:						
Raw materials and utilities	18,598,200	36.3	10,343,500	48.0	2,596,200	46.3
Direct labor	1,108,100	2.2	277,000	1.3	110,900	2.0
Plant maintenance	1,428,000	2.8	357,000	1.7	132,600	2.3
Payroll overhead	391,500	0.8	97,900	0.5	37,800	0.7
Operating supplies	285,600	0.5	71,400	0.3	26,500	0.5
Total direct cost	21,811,400	42.6	11,146,800	51.8	2,904,000	51.8
Indirect cost	1,410,900	2.7	352,700	1.6	135,000	2.4
Fixed cost:						
Taxes and insurance	7,900,700	15.4	2,831,900	13.1	723,500	12.9
Depreciation	20,146,800	39.3	7,221,300	33.5	1,844,900	32.8
Total operating cost	51,269,800	100.0	21,552,700	100.0	5,607,400	100.0
Operating cost per thousand scf of product gas	1.726		.726		.189	

reabsorption section of the secondary absorber had an inside diameter of 3.3 ft and a wall thickness of 3 in. With overall plate efficiencies taken at 20 to 40 percent, absorber heights ranged from 5 to 110 ft. The estimated number of absorbers was as follows:

Case	Percent methane in feed	Primary absorber	Secondary absorber
1	5	191	239
2	20	48	139
3	50	17	6

Capital and operating costs of the oil absorption process are shown in tables 3 and 4, respectively. Of the installed equipment cost, absorber costs were the highest and amounted to 65, 43, and 34 percent of the installed equipment cost for cases 1 through 3, respectively. Heat exchangers were usually the next highest cost equipment. Power costs constituted the largest single operating cost aside from the fixed cost. For cases 1 through 3, power costs were, respectively, 34, 45, and 44 percent of total operating costs.

CASCADE LIQUEFACTION PROCESS

The cascade liquefaction process uses a series of auxiliary refrigerants in its approach to the temperature of liquefaction of the product methane. To prevent the accumulation of frozen solids in the liquefaction step, the feed gas must undergo three prepurification steps prior to liquefaction. A simplified flowsheet of the overall liquefaction is shown in figure 3. Only cases 2 and 3, 20 and 50 percent methane in feed gas, are considered. Scrubbing the feed gas with monoethanolamine-diethylene glycol solution lowers carbon dioxide to 50 ppm, hydrogen sulfide by 80 percent, and water vapor to 0.03 mole-percent. Adsorption with activated charcoal removes benzene (9). Adsorption with molecular sieves lowers the water vapor content to a dewpoint of -100° F. Finally, in the liquefaction step, only methane and traces of other hydrocarbon are liquefied. Some hydrogen physically dissolves in the liquefied gas because liquefaction occurs at a pressure of about 1,400 psia.

The complex cascade liquefaction step is illustrated by the flowsheet for case 2 presented in figure 4. With slight modifications, the flow scheme is essentially the same as that proposed by Keesom (23). In this scheme, the three refrigerants--ammonia, ethylene, and methane--are arranged so that evaporation of the higher boiling refrigerant produces liquefaction of the next lower boiling refrigerant. Thus ammonia liquefies the ethylene in evaporator V_1, ethylene liquefies methane refrigerant in evaporator V_2, and methane refrigerant liquefies methane product in evaporator V_3. A gas phase product of approximately 90 percent methane at about 1,400 psia is obtained by reevaporating the liquefied product gas through heat exchange with incoming feed gas at exchangers E_6, E_5, E_7, and evaporator V_4.

Some of the published data used in the design include the enthalpy of methane (14), enthalpy of hydrogen (33), and the solubility of hydrogen in methane (3). The unit cost of steam was $0.32 and $0.153 per thousand pounds, at the respective pressures of 184 and 25 psia.

Capital costs and operating costs are presented in tables 5 and 6 for methane-hydrogen separation by the cascade liquefaction process. As shown in table 5, the cost of prepurification equipment is small compared to the cost of the equipment in the cascade liquefaction step. Evaporators and heat exchangers in the liquefaction section comprise well over half of the total installed equipment costs. The largest direct cost item, electric power, amounts to 32 and 33 percent of total operating costs for cases 2 and 3. Practically all of this power is used in the compression of refrigerants.

TABLE 5.- Total estimated capital requirements, cascade liquefaction process

Unit	Case 2, 20 pct methane		Case 3, 50 pct methane	
	Dollars	Percent	Dollars	Percent
Amine-glycol	793,300	1.8	431,400	1.6
Activated carbon	1,122,900	2.5	597,900	2.3
Molecular sieves	307,100	.7	195,800	.7
Liquefaction	32,603,100	73.4	19,390,900	73.8
Total installed equipment	34,826,400	78.4	20,616,000	78.4
Plant facilities	3,482,600	7.8	2,061,600	7.9
Plant utilities	4,597,100	10.4	2,721,300	10.4
Total construction	42,906,100	96.6	25,398,900	96.7
Initial adsorbent requirements	48,000	.1	24,600	.1
Total plant cost (insurance and tax bases)	42,954,100	96.7	25,423,500	96.8
Interest during construction	859,100	2.0	508,500	1.9
Subtotal for depreciation	43,813,200	98.7	25,932,000	98.7
Working capital	586,800	1.3	345,000	1.3
Total investment	44,400,000	100.0	26,277,000	100.0

TABLE 6.- Estimated annual operating costs, cascade liquefaction process

	Case 2, 20 pct methane		Case 3, 50 pct methane	
	Dollars	Percent	Dollars	Percent
Direct cost:				
Raw materials and utilities	2,168,100	34.0	1,298,400	34.2
Direct labor	277,000	4.3	166,200	4.4
Plant maintenance	357,000	5.6	214,200	5.6
Payroll overhead	97,900	1.5	58,700	1.5
Operating supplies	71,400	1.1	42,800	1.1
Total direct cost	2,971,400	46.5	1,780,300	46.8
Indirect cost	352,700	5.5	211,600	5.6
Fixed cost				
Taxes and insurance	859,100	13.5	508,500	13.4
Depreciation	2,190,700	34.5	1,296,600	34.2
Total operating cost	6,373,900	100.0	3,797,000	100.0
Benzene credit per thousand scf of product gas	.035		.009	
Operating cost per thousand scf of product gas	.215		.128	

DISCUSSION

The economic merit of the three processes considered decreases in the following order: Moving-bed charcoal adsorption, cascade liquefaction, and oil absorption. As shown in figures 5 and 6, respectively, the operating costs and capital costs are lowest for the moving-bed charcoal adsorption process at all levels of feed gas composition.

With total operating costs for the overall hydrogasification process estimated to range from $0.70 to $0.85 per M cu ft of high-Btu product gas, operating costs for the oil absorption process, as shown in figure 5, are impractically high at the 5- and 20-percent methane feed levels, while operating cost for the cascade liquefaction process shows some merit at $0.13 per M cu ft of product for 50 percent methane in the feed gas. However, charcoal adsorption in a moving bed is the most economic method of separation and is of practical interest at methane feed concentrations as low as 20 percent. As shown also in figure 5, unit operating costs of all three separating processes decline as the percent methane in the feed gas increases from 5 to 50 percent. These costs tend to level out as the percent methane in the feed gas approaches 50 percent.

The relationship of the capital investment costs of the three processes, as shown by figure 6, parallels that of the operating costs. Compared to a total investment cost of $70 to $100 million for a complete hydrogasification plant producing 90 million std cu ft per day of high-Btu pipeline gas, capital investments ranging from $26 to $40 million for the cascade liquefaction and the oil absorption processes are far too high for practical consideration. However, capital costs for the charcoal adsorber process are attractive, amounting to less than $15 million at feed gas concentrations of 20 percent

methane and higher. The ability of the moving-bed charcoal adsorption process to deliver both hydrogen and methane streams at pressure without additional recompression is of great value to any high pressure process requiring a separating step with recycle of either gas at high pressure.

Should the impurities in the feed gas significantly lower the efficiency of the moving-bed charcoal adsorption process, the maximum penalty inflictable upon the operating cost is between $0.04 and $0.03 per M cu ft of product gas for cases 2 and 3, respectively, based upon the prepurification costs in the liquefaction process. Even in this instance the relative standings of the processes are not changed. However, the assumptions made in this estimate regarding the adsorptivity of activated carbon in the presence of possible contaminants and the overall loss of carbon should be substantiated experimentally to verify the validity of this estimate.

In spite of the fact that the cascade liquefaction process is thermodynamically more efficient than other liquefaction processes, the recovery of methane from methane-hydrogen mixtures by the cascade liquefaction process was not found to be as economic as recovery by a liquefaction process proposed by Mann and Pryor (27) that utilizes Joule-Thompson cooling. Operating costs for the Mann and Pryor liquefaction process for 98 percent hydrogen in the recycle stream were $0.13 and $0.07 per M cu ft of product for the 20- and 50-percent methane cases, respectively; whereas, the corresponding operating costs for cascade liquefaction are $0.22 and $0.13 per M cu ft of product. These differences in operating costs are primarily due to the capital costs of the cascade liquefaction being over four times those estimated for the process of Mann and Pryor. Operating costs of the process of Mann and Pryor are nearly as low as those estimated for the moving-bed charcoal adsorption process. When the product gas is to be stored cryogenically before use, instead of being transmitted immediately by pipeline, separation and storage by a liquefaction process employing Joule-Thompson cooling may be superior to separation by moving-bed charcoal adsorption followed by cryogenic storage of product gas.

At present, the prospects of the oil scrubbing process being greatly improved are poor. Major obstacles to its improvement are; the lack of a solvent with high capacity and selectivity for methane and the need to recompress the flashed methane product from essentially atmospheric pressure to pipeline pressure.

BIBLIOGRAPHY

1. Barber, N. R., and G G. Haselden. The Liquefaction of Naturally Occurring Methane. Trans. Inst. Chem. Eng., v. 35, 1957, pp. 77-86.

2. Benedict, M., and A. Boas. Separation of Gas Mixtures by Mass Diffusion. Chem. Eng. Prog., v. 47, No. 3, 1951, pp. 111-122.

3. Benham, A. L., and D L. Katz. Vapor-Liquid Equilibria for Hydrogen-Light Hydrocarbon Systems at Low Temperatures. A I. Ch. E J., v. 3, No. 1, March 1957, pp. 33-36.

4. Berg, C. Hypersorption--A Process for Separation of Light Gases. Gas, v. 47, No. 52, January 1947, pp. 32-37.

5. Berg, C., R. G. Fairfield, D. H. Imhoff, and H. J. Multer. Hypersorption. Oil and Gas J., v. 47, No. 52, April 23, 1949, pp. 95, 97, 130, 132, and 135.

6. Campbell, M. Larry, and Lawrence N. Canjar. Adsorption of Methane from Hydrogen on Fixed Beds of Silica Gel. A. I. Ch. E. J., v. 8, No. 4, Sept. 1962, pp. 540-542.

7. Channabasappa, K. C., and H. R. Linden. Fluid-Bed Pretreatment of Bituminous Coals and Lignite, Direct Hydrogenation of Chars to Pipe-line Gas. Ind. Eng. Chem., v. 50, No. 4, April 1958, pp. 637-644.

8. Chemical Week. Sifting Gases the Heatless Way. v. 93, No. 2, July 13, 1963, pp. 65-66.

9. Coolidge, A. S. Adsorption of Vapors by Charcoal. J. Am. Chem. Soc., v. 46, No. 3, March 1924, pp. 596-627.

10. Davis, W. H. Absorptive Separation of Methane and Hydrogen. U. S. Patent 2,689,624, Sept. 21, 1954.

11. Dean, M. R., and J W. Tooke. Vapor-Liquid Equilibria in Three Hydrogen-Paraffin Systems. Ind. Eng. Chem., v. 38, No. 4, April 1946, pp. 389-393.

12. DeLury, J. Liquefaction: New Gas Market. Chem. Eng., v. 66, No. 25, Dec. 14, 1959, pp. 165-168.

13. DeRosset, A. J. Processing Industrial Gas Streams at High Pressures. Diffusion of Hydrogen Through Palladium Membranes. I. E. Chem., v. 52, No. 6, June 1960, pp. 525-528.

14. Elliott Company. Elliott Multistage Centrifugal Compressors. Bulletin P-11, 1962, Jeannette, Pa., 57 pp.

15. Frolich, Per K., and A. White. Adsorption of Methane and Hydrogen on Charcoal at High Pressure. Ind. and Eng. Chem., v. 22, No. 10, October 1930, pp. 1058-1060.

16. Frolich, Per K., E. J. Tauch, J. J. Hogan, and A. A. Peer. Solubilities of Gases in Liquids at High Pressure. Ind. and Eng. Chem., v. 23, No. 5, May 1931, pp. 548-550.

17. Granquist, W. T., F. A. Mitch, and C. H. Edwards. Adsorption of Normal Saturated Hydrocarbons on Fuller's Earth. Ind. and Eng. Chem., v. 46, No. 2, Feb. 1954, pp. 358-362.

18. Grant, R. J., M. Manes, and S. B. Smith. Adsorption of Normal Paraffins and Sulfur Compounds on Activated Carbon. A. I. Ch. E. J., v. 8, No. 3, July 1962, pp. 403-406.

19. Harper, E. A. Kerosine as Absorber Oil--How Good? Petrol. Refinery, v. 38, No. 5, May 1959, pp. 144-146.

20. Hiteshue, R. W., R. B. Anderson, and S. Friedman. Hydrogenation of Coal and Chars. Ind. and Eng. Chem., v. 52, No. 7, July 1960, pp. 577-579.

21. Hobbis, L. C. W., and E. R. Harrison. Use of Nickel Diffusion Tubes for the Purification of Hydrogen. Rev. Sci. Instr., v. 27, No. 4, April 1956, p. 238.

22. Hunter, J. B. Silver-Palladium Films for Separation and Purification of Hydrogen. U. S. Patent 2,773,561, Dec. 11, 1956.

23. Keesom, M. Sur L'Économie du Procédé à Cascade pour la Liquefaction des Gaz. (The Economy of the Cascade Process for the Liquefaction of Gases.) Leiden Comm. Suppl., No. 76A, 1933, pp. 1-20.

24. Kehde, Howard, R. G. Fairfield, J. C. Frank, and Leonard W. Zahnstecher. Ethylene Recovery Commercial Hypersorption Operation. Chem. Eng. Prog., v. 44, No. 8, 1948, pp. 575-582.

25. Lederman, Peter B., and Brymer Williams. (University of Michigan.) Adsorption of Nitrogen-Methane on Molecular Sieves. Presented at A. I. Ch. E. meeting, Los Angeles, Calif., Feb. 1962, 11 pp.

26. Maier, C. G. Mechanical Concentration of Gases. BuMines Bulletin 431, 1941, 148 pp.

27. Mann, L. R., and J. A. Pryor. Cryogenic Separation and Purification of Methane and Hydrogen. (Manuscript presented at 1963 A.I.Ch.E. meeting in New Orleans.) Air Products and Chemicals, Inc., Allentown, Pa., Jan. 31, 1963, 9 pp.

28. Meares, P. (Univ. Old Aberdeen, Scot.), Diffusion of Gases in Poly (Vinyl Acetate) in Relation to the 2nd-Order Transition. Trans. Faraday Soc., v. 53, 1957, pp. 101-106.

29. Parent, J. D. The Storage of Natural Gas as Hydrate. Inst. of Gas Tech. Research Bulletin, No. 1, Chicago, Ill., Jan. 1948, 40 pp.

30. Sage, B. H., and W. N. Lacey. Phase Equilibria in Hydrocarbon Systems. Ind. Eng. Chem., v. 30, No. 11, Nov. 1938, pp. 1296-1304.

31. Salvi, G., and A. Fiumara. The Solubility of Methane in Propane and Butane. Riv. Combust. (Italy), v. 14, Nov. 1960, pp. 822-836.

32. Schmahl, N. G., and J. Schewe. The Thermal Separation of Gas Mixtures. II. Thermal Diffusion. Z. Elektrochem., v. 46, 1940, pp. 203-212.

33. Scott, R. B. Cryogenic Engineering (1st ed.). D. Van Nostrand Co., Inc., Princeton, N. J., 1959, pp. 294-297.

34. Steiner, W., and S. W. Weller. Fractionator of Gaseous Mixtures by Means of Permeable Nonporous Membranes. U. S. Patent 2,597,907, May 27, 1952.

35. Szepesy, L., and V. Illes. Adsorption of Gases and Gas Mixtures. II. Acta. Chim. Hung., v. 35, No. 1, 1963, pp. 53-59.

36. von Fredersdorff, C. G. Process for Coal Hydrogasification. Ind. and Eng. Chem., v. 52, No. 7, July 1960, pp. 595-598.

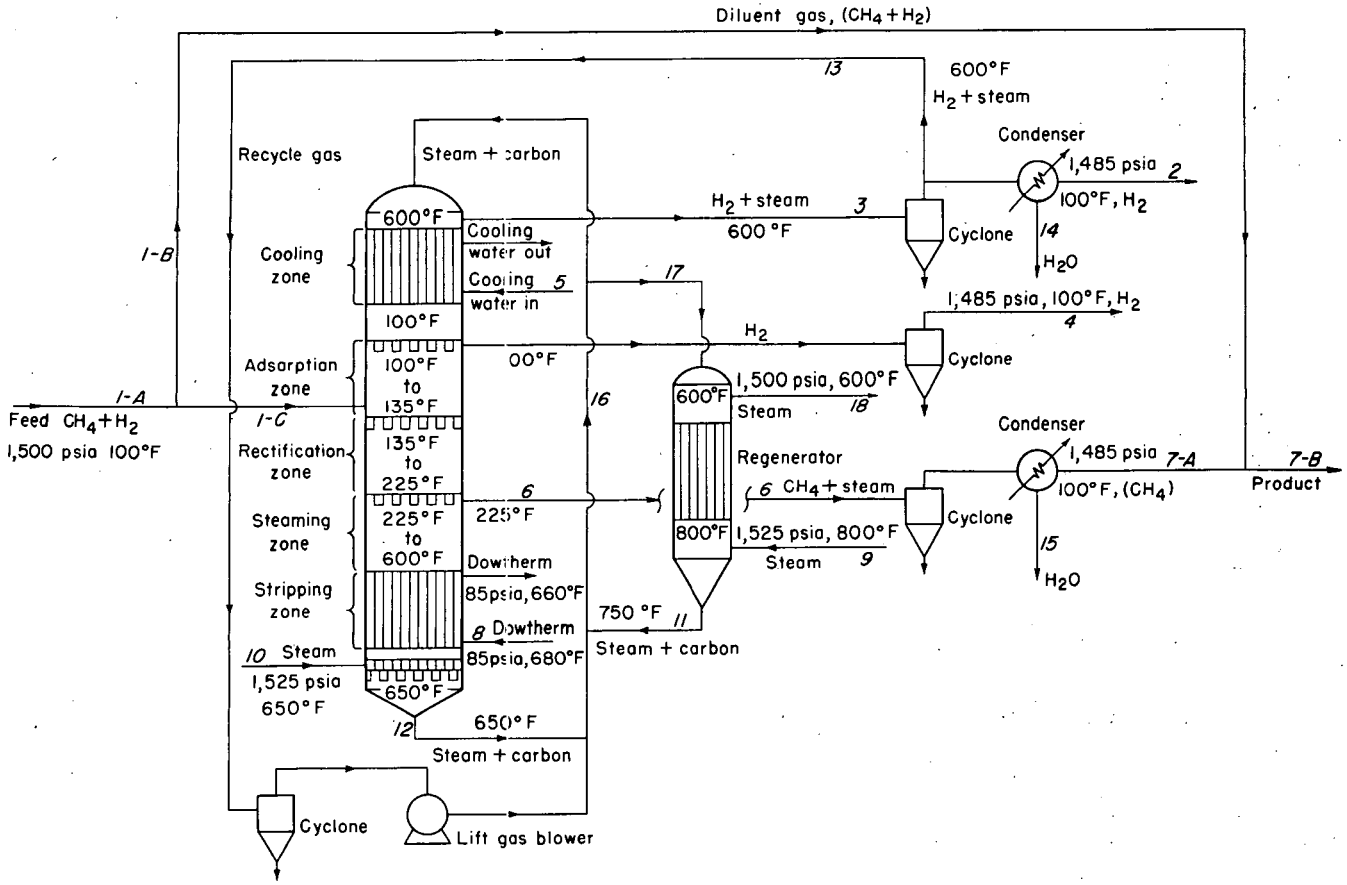

Figure 1.—Moving-bed charcoal adsorption process.

8-13-63 L-8258

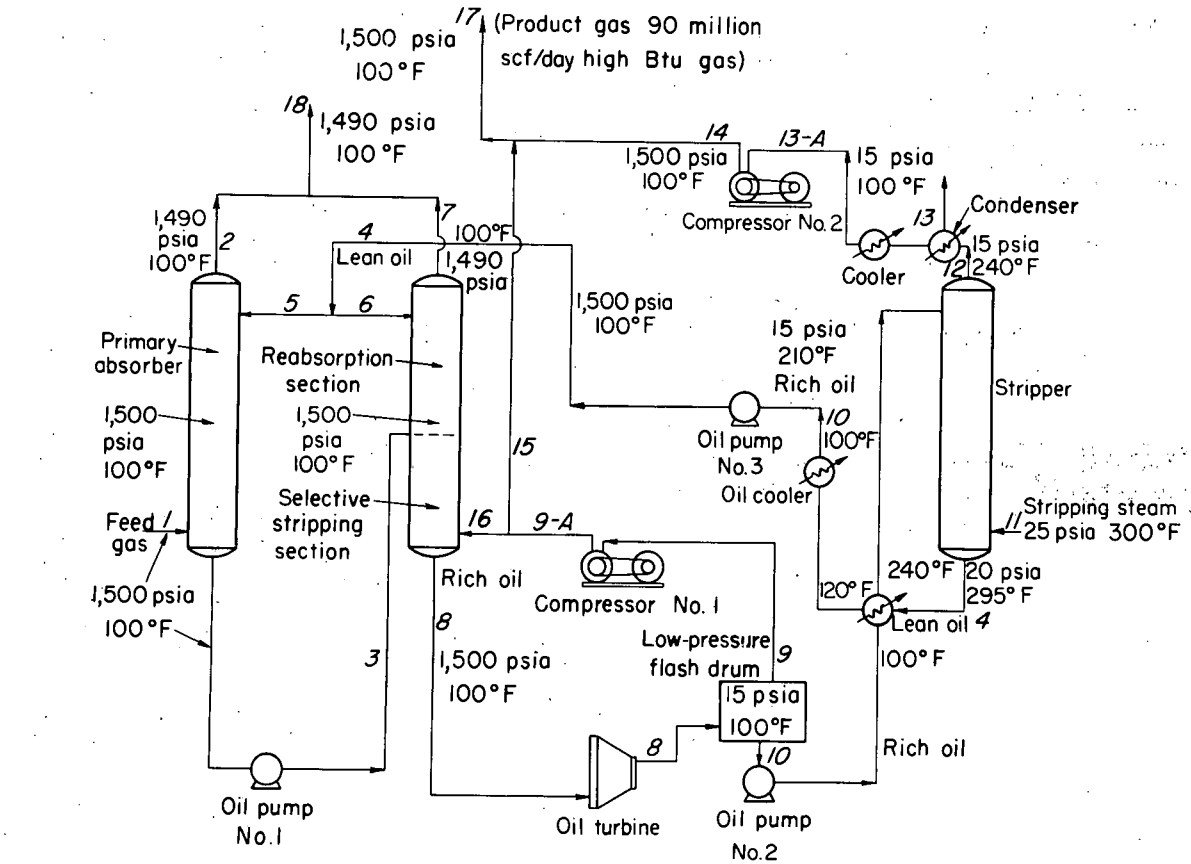

Figure 2.-Oil absorption process case I.

8-13-63 L-8259

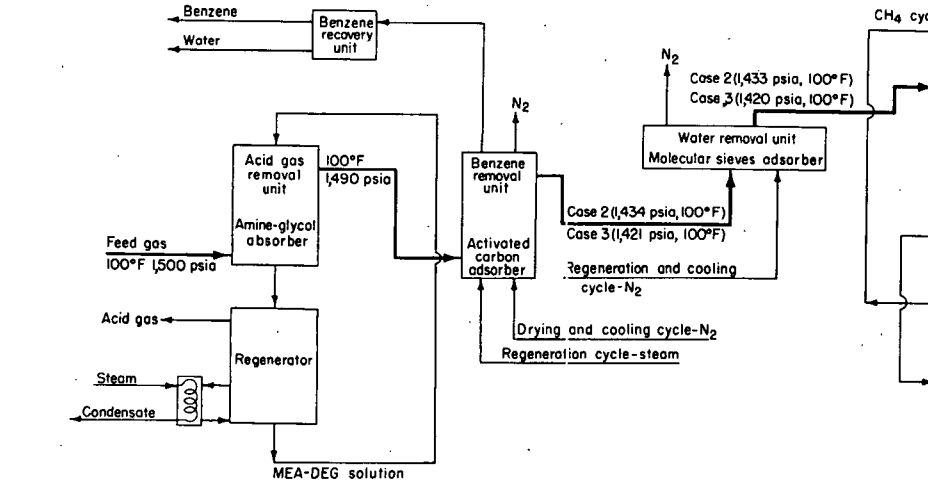

Figure 3.—Overall process flowsheet, cascade liquefaction.

7-27-63 L-8262

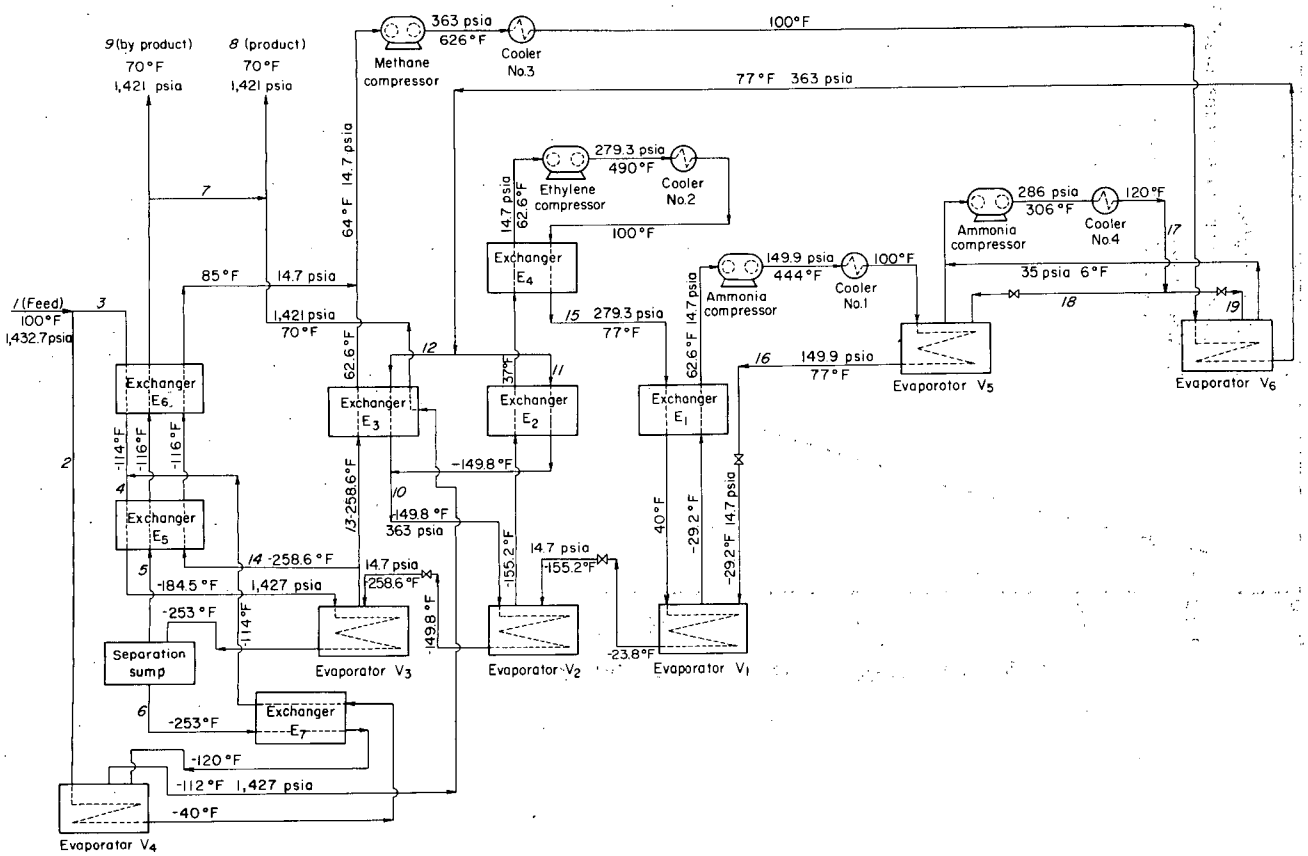

Figure 4.-Cascade liquefaction-case 2.

8-13-63 L-8266

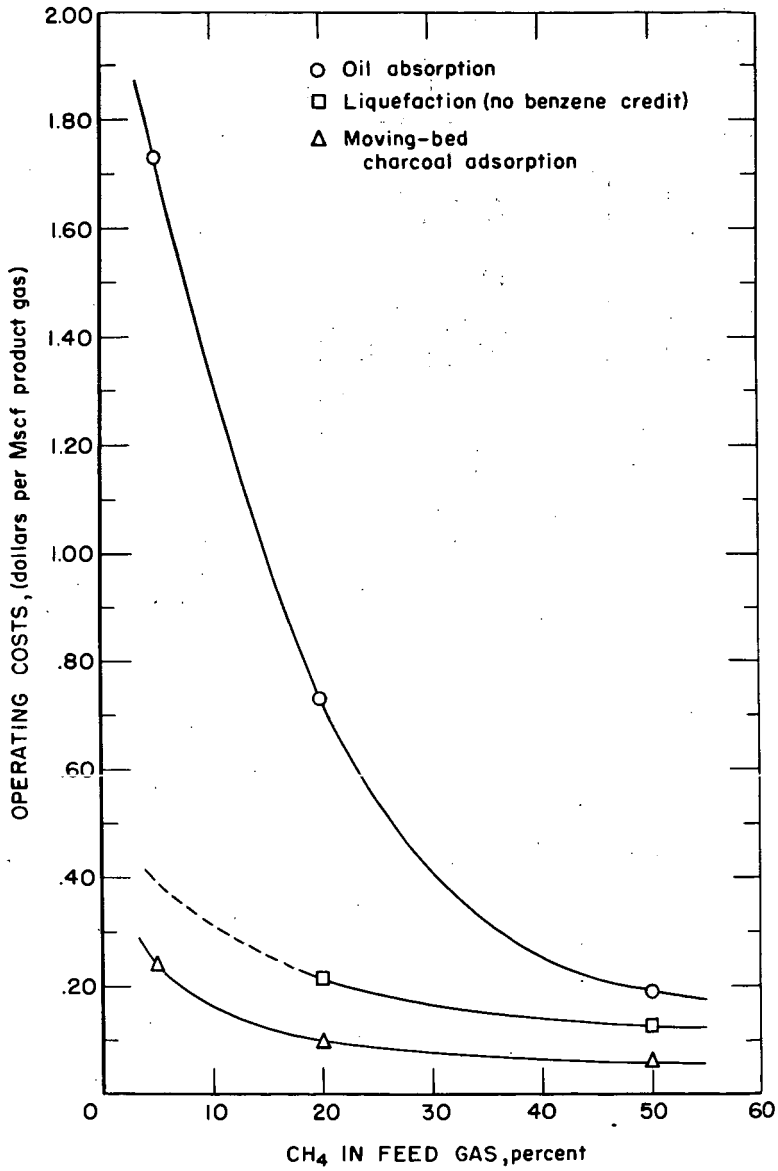

Figure 5.- Methane feed gas composition versus operating cost.

L-8268 8-2-63

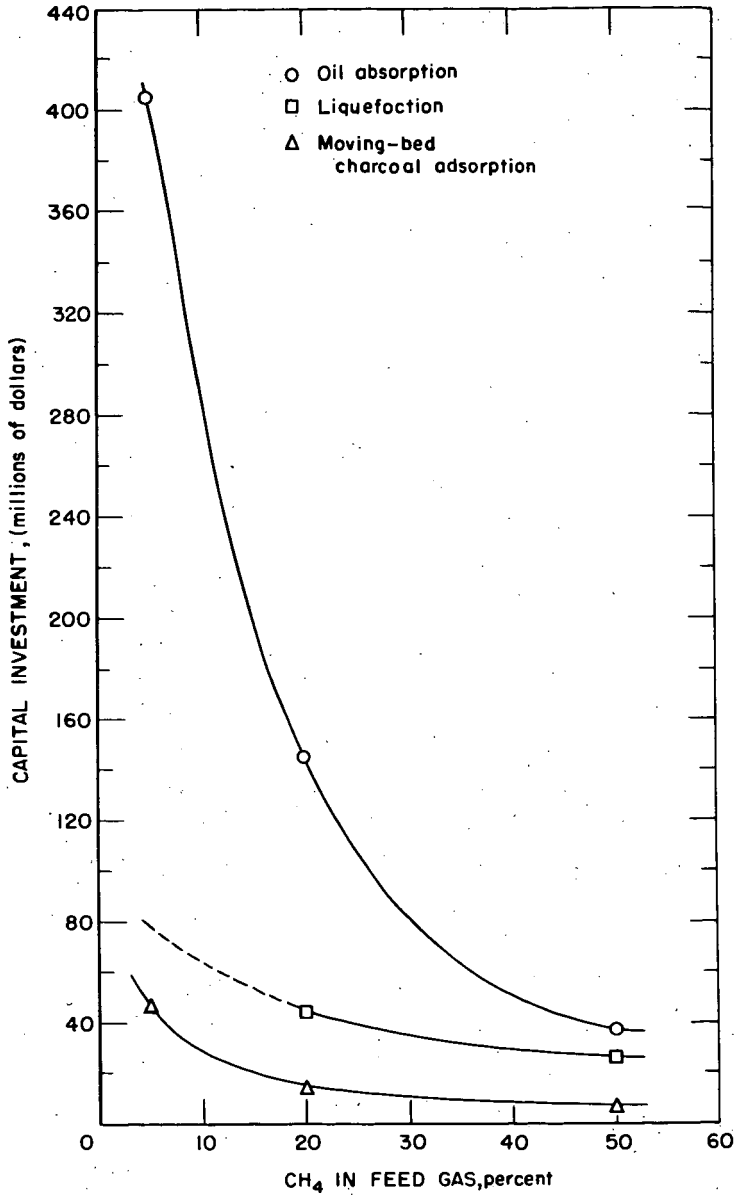

Figure 6.-Methane feed gas composition versus capital investment.

L-8269 8-2-63