FORMATION OF OXIDES OF NITROGEN IN PULVERIZED COAL COMBUSTION

By

Daniel Bienstock,[1] Robert L. Amsler,[2] and Edgar R. Bauer, Jr.[3]

ABSTRACT

Nitrogen oxides are a potential atmospheric pollutant. Their formation and decomposition were studied in an experimental pulverized furnace. The concentration of nitrogen oxides (NO_x) was a maximum in the combustion zone and decreased as the combustion gas cooled. At a coal burning rate of 2 lbs an hour and 22 percent excess air, reduction of nitrogen oxides was obtained by selective secondary-air distribution. With 105 percent of the stoichiometric air fed to the coal-combustion zone and 17-percent additional air fed just beyond the flame front, 62-percent reduction of NO_x occurred with good combustion efficiency. Lowering the quantity of excess air lowered the NO_x concentration, but at the expense of combustion efficiency. At 22-percent excess air fed to the primary combustion zone, NO_x concentration in the effluent was 550 ppm and

---

[1] Supervisory chemical engineer.

[2] Chemical research engineer.

[3] Chemical engineering technician.

All authors are with the Pittsburgh Coal Research Center, Bureau of Mines, U.S. Department of the Interior, Pittsburgh, Pa.

carbon in the fly ash 2.0 percent. At 5-percent excess air, the NO_x concentration fell to 210 ppm and carbon in the fly ash rose to 13.8 percent. At stoichiometric combustion the NO_x was 105 ppm a reduction of 81 percent, and the carbon 42.3 percent. Recirculation of combustion gas was not an effective means of lowering NO_x formation.

INTRODUCTION

Any combustion process that produces high temperatures in the presence of atmospheric nitrogen and oxygen will yield nitrogen oxides as a product. At the high temperatures obtained in internal combustion engines and in thermal power stations, boilers, and space heaters appreciable amounts of nitrogen oxides are formed. Although nitric oxide (NO) is the predominant oxide formed during combustion, once emitted to the atmosphere and hastened by sunlight conversion to the dioxide (NO_2) occurs. Nitrogen dioxide has not been considered a major air pollutant. Although average maximum concentrations as high as 0.45 ppm have been reported in the atmosphere of major U.S. cities (13)[4], it is well below the threshold level of 5 ppm suggested by the American Conference of Governmental

---

[4] Underlined numbers in parentheses refer to items in the list of references at the end of this report.

Industrial Hygienists (1). Nitrogen dioxide, however, has been indicted as a precursor of smog by reacting photochemically with hydrocarbons in the atmosphere (9,15). Recently it has been shown that individuals suffering from cardiovascular dysfunction are impaired by breathing smog-laden air (7). The California Department of Public Health is currently evaluating the data on oxides of nitrogen and their role in air pollution to determine whether air quality and motor vehicle emission standards should be adopted regarding them (11).

Changes in automotive-engine design and operation are only slightly effective in reducing emissions of oxides of nitrogen. On the other hand the most promising methods at present for reducing auto exhaust hydrocarbons have the effect of increasing nitrogen oxides slightly (8).

Barnhard and Diehl (5) showed that with a 2-stage combustion, reduction of nitrogen oxides occurred in gas- and oil-fired boilers. With 95 percent of theoretical air through the burners and 15 percent through the auxiliary air ports, nitrogen oxides concentration for both gas and oil firing was reduced from 525 to 385 ppm--a 27 percent reduction. On oil firing with 90 percent of theoretical air through the burners and the balance through the air ports, the NO_x content was reduced from 580 to 305 ppm--a reduction of 47 percent. Burners for new stations of the Southern California Edison Company were designed for two-stage combustion (3) and existing ones converted when outages could be arranged (4).

Sensenbaugh and Jonakin (14) showed that tangential firing gave consistently lower NO_x concentrations than horizontal firing for both oil- and gas-fired furnaces. Because two-stage combustion introduces additional control problems they recommended standard tangential firing rather than two-stage combustion with horizontal firing as a preferred technique in reducing nitrogen oxides formation.

There has been no work reported in lowering nitrogen oxide formation in coal-fired furnaces despite the large role that coal plays in the energy picture--accounting for 66 percent of the utility fuel market. Projection of coal used in power generation indicates a large gain from the 225 million tons in 1964 to 550 million tons in 1980 (12).

Because of the importance of coal combustion in the production of nitrogen oxides and the pollution potential of those oxides, an experimental program was undertaken in cooperation with the U.S. Public Health Service to evaluate the factors in their formation.

EXPERIMENTAL APPARATUS

Furnace

This study was conducted in a pulverized-coal-fired furnace capable of burning 1 to 4 lbs of coal per hour (10). The furnace is fired vertically downward into the primary combustion chamber. The combustion gases pass under an arch in the first chamber, over a baffle into a larger secondary chamber, and then under a second arch into the furnace breech and out the stack. Figure 1 shows a cross-section of the furnace. The combustion air is metered and divided into three streams. The primary-air stream transports the pulverized coal from the coal-feeder outlet. The secondary- and tertiary-air streams control the flame pattern and maintain ignition stability. The secondary air enters the furnace through the burner in a tube concentric with that carrying the primary air-coal mixture and mixes with that stream at the burner tip. The tertiary air enters through two tubes as shown in figure 1. The tertiary air emerges horizontally from a hole near the bottom of each tube tangentially to the flame.

12-17-63 L-8388

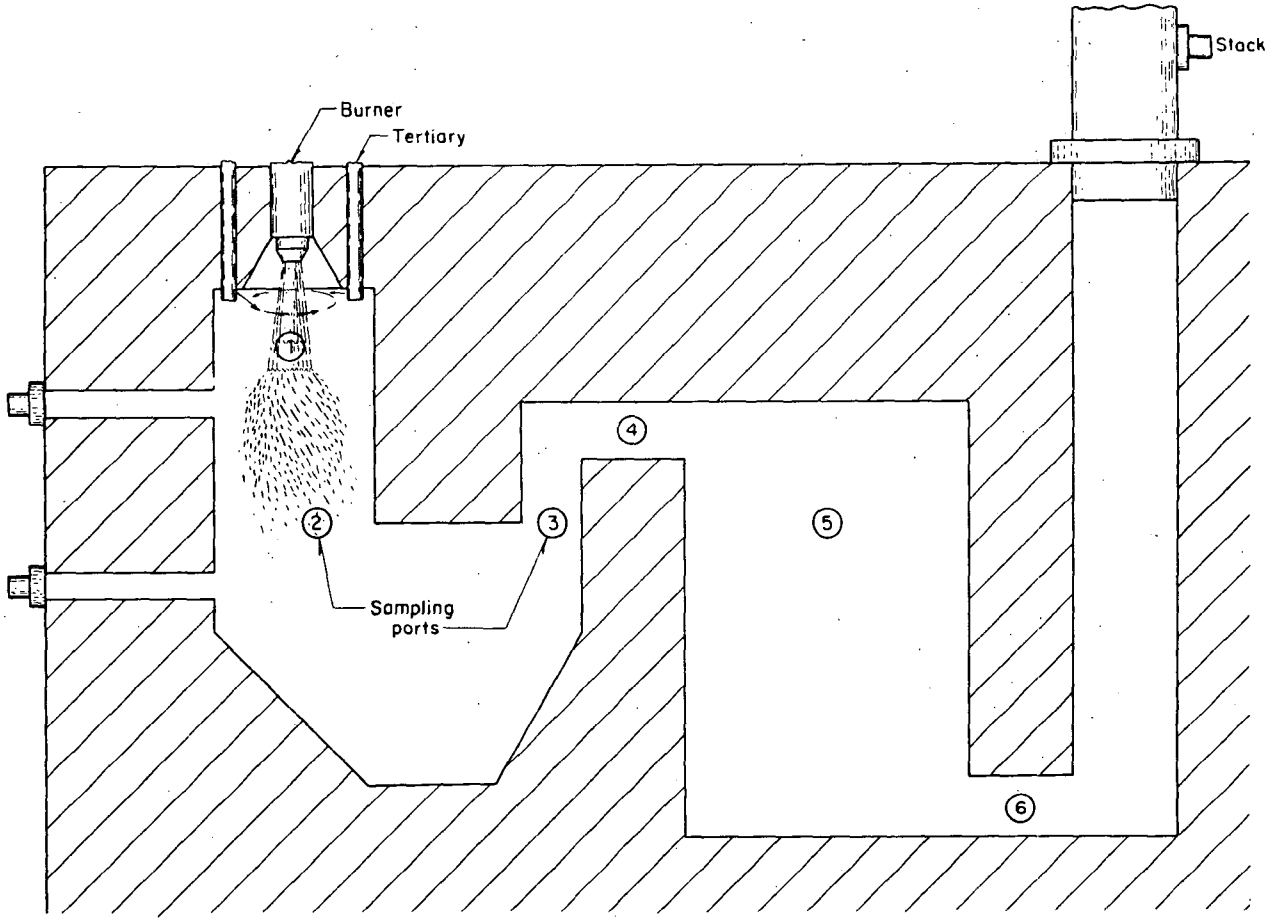

Figure 1.- Cross-section of experimental furnace with location of sample ports.

Nine access ports are available for observation and sampling. Any of these ports may be fitted with a sight glass or a flange to admit a sampling probe. The ports in figure 1, numbered 1 through 4 and stack, were used for sampling. Ports 2 and 3 were also adapted for air injection during two-stage combustion. In the air-injection system part of the combustion air was preheated to approximately 1,900° F and dispersed across the path of the combustion gases just beyond the flame front. Figure 2 is a sectional view of the air-injection system in position at port 3. When air injection was used at a port that location could not be sampled.

Probe

Gas samples were drawn from the furnace and temperatures measured with a shielded aspirating probe, shown in figure 3. These probes were built smaller in diameter than commercially available equipment because of the limited volume of gas available for aspiration in the experimental furnace. The probes carried Pt/Pt-10 percent Rh thermocouples to measure temperatures at the point from which the samples were taken. The thermocouple is protected from errors in temperature measurement by two concentric radiation shields. The base is tapered outward at each of its three gas ports to allow a gradual change of direction for the combustion gas minimizing fly ash deposition. The probe is water-cooled to the base of the

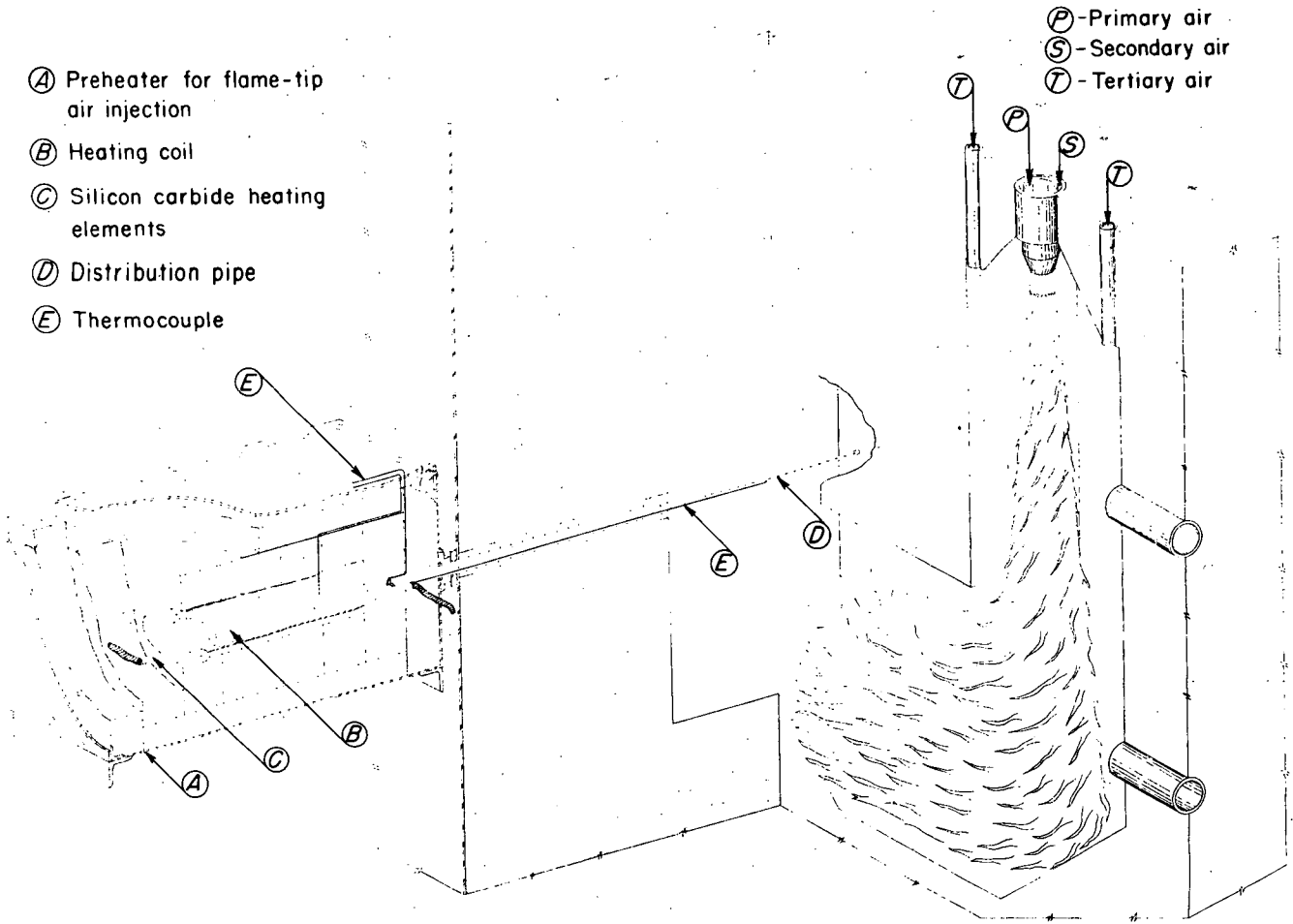
Ⓐ Preheater for flame-tip air injection
Ⓑ Heating coil
Ⓒ Silicon carbide heating elements
Ⓓ Distribution pipe
Ⓔ Thermocouple
Ⓟ-Primary air
Ⓢ-Secondary air
Ⓣ-Tertiary air
Ⓐ
Ⓑ
Ⓒ
Ⓓ
Ⓔ
Ⓔ
Ⓟ
Ⓢ
Ⓣ
Ⓣ

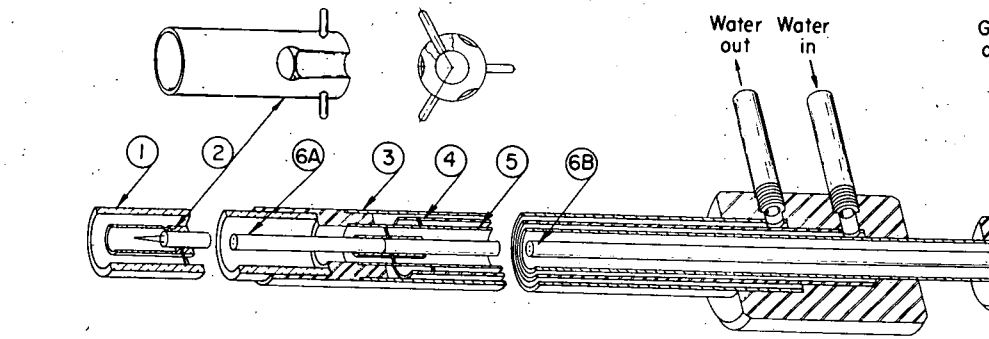

No	Name	Size	Material
1	Outer radiation shield	.500"OD X .437"ID	99% alumina
2	Inner radiation shield	.270"OD X .228"ID	Grade A lava stone
3	Outer water jacket	.625"OD X .569"ID	304 s steel
4	Inner water jacket	.500"OD X .460"ID	304 s steel
5	Gas aspiration tube	.375"OD X .305"ID	304 s steel
6	Thermocouple-Platinum vs. Platinum-10% Rhodium	.125"OD	Insulation 6A-99% alumina 6B-Nichrome sheath

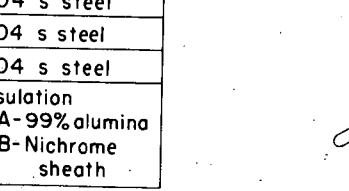

Figure 3.- Aspirating, water-cooled probe.

L-8317A 9-30-63
Rev. 12-19-63
Rev. 3-11-64
12-27-65

radiation shielding. Gas is aspirated through the radiation shielding to minimize the loss of heat by radiation from the thermocouple. The effect of aspirating gas upon temperature measurement is shown in figure 4. With no aspiration the temperature indicated was 2,125° F. The indicated temperature increased with increasing volume of aspirating gas until a maximum temperature of 2,600° F was reached at 55 SCFH. Additional aspiration did not cause further temperature increase. Moving at a velocity of 100 ft/sec the gas in the probe is quenched from >2,000° F to 120° F in 0.02 second. High chilling rates are necessary to prevent significant dissociation of the nitric oxide.

Sampling System

The sampling system including the probe is shown in figure 5. The system is mobile and is shown in position on the furnace in figure 6. One pump is high volume, low vacuum and serves as the aspirator. The second pump is low volume, high vacuum and is used to evacuate sample flask and tubing. Nitrogen oxides and combustion gas are sampled simultaneously. The nitrogen oxides were analyzed by the phenoldisulfonic acid method (2,6) and the remaining components in the combustion gas were determined by

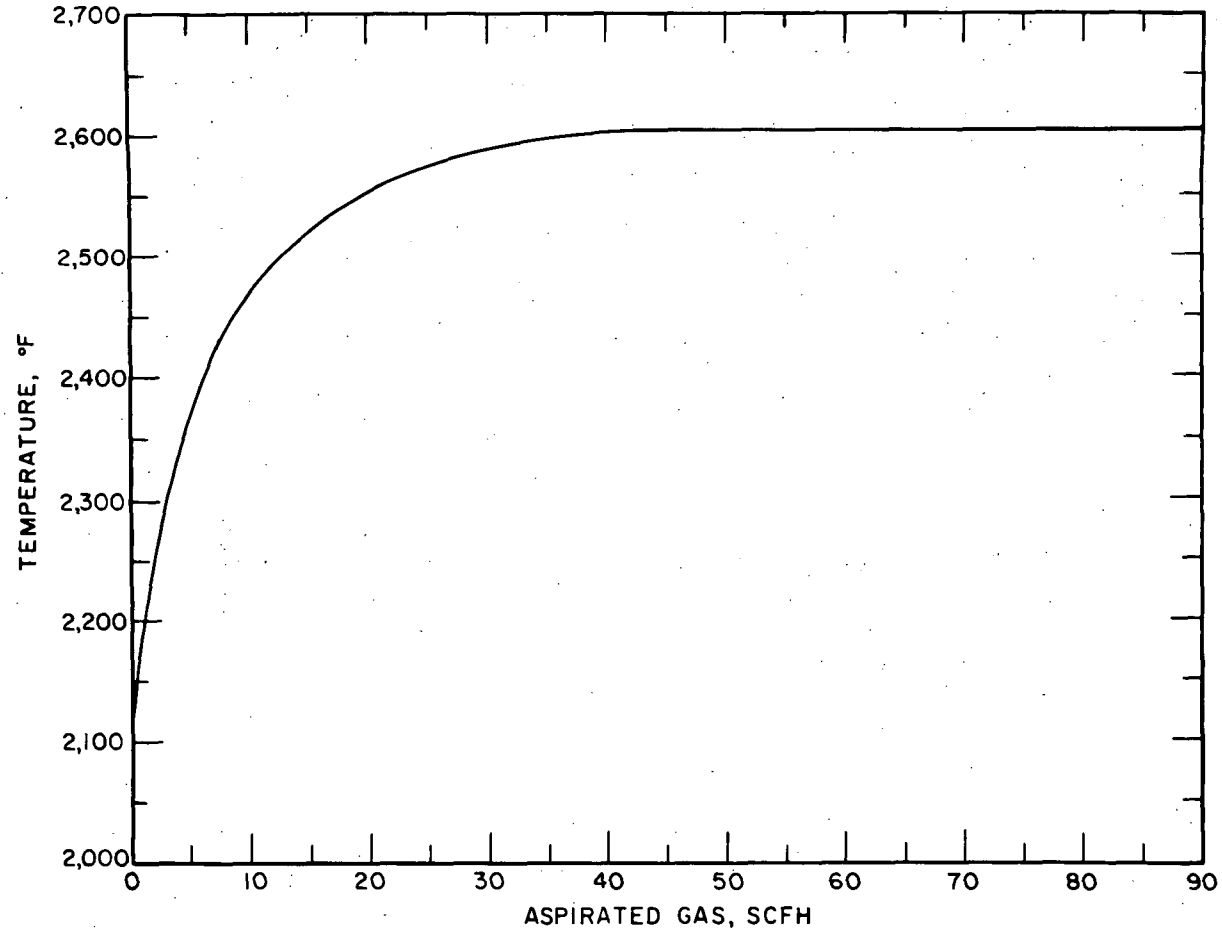

Figure 4.- Temperature indication with aspirating thermocouple as a function of volume of gas drawn.

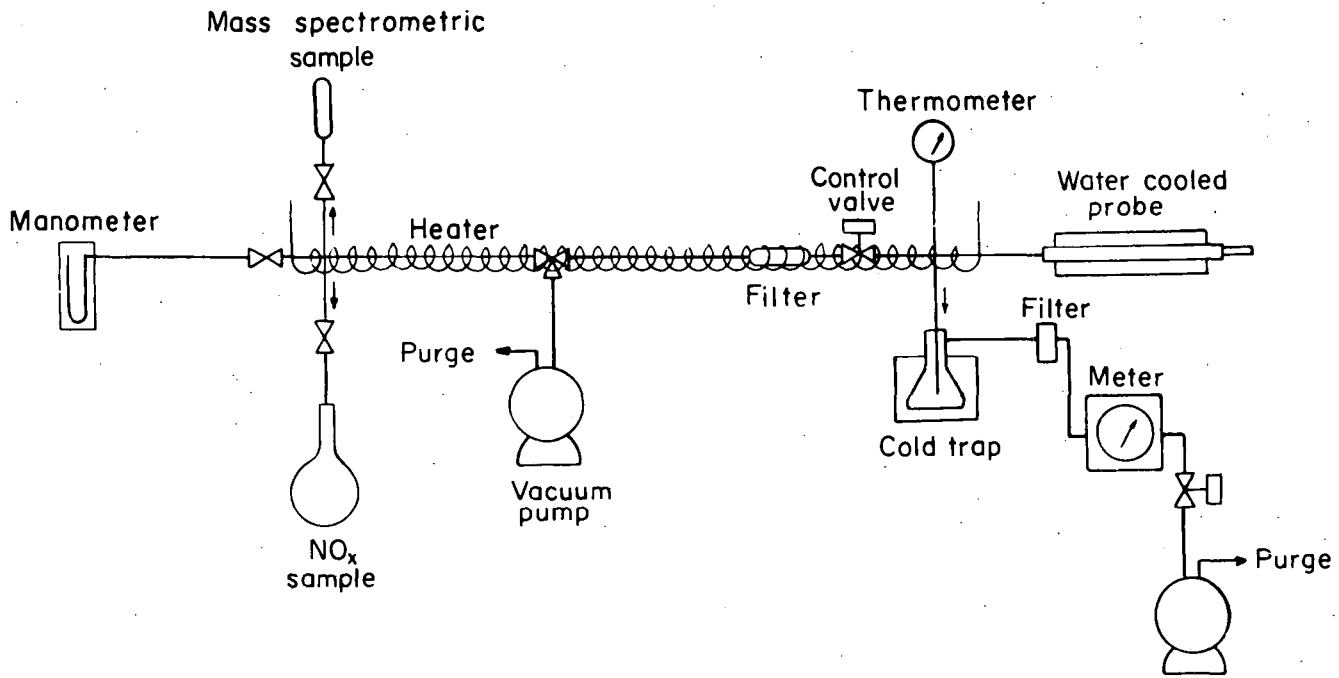

Figure 5.- Aspirating thermocouple for sampling gases in pulverized-coal combustion

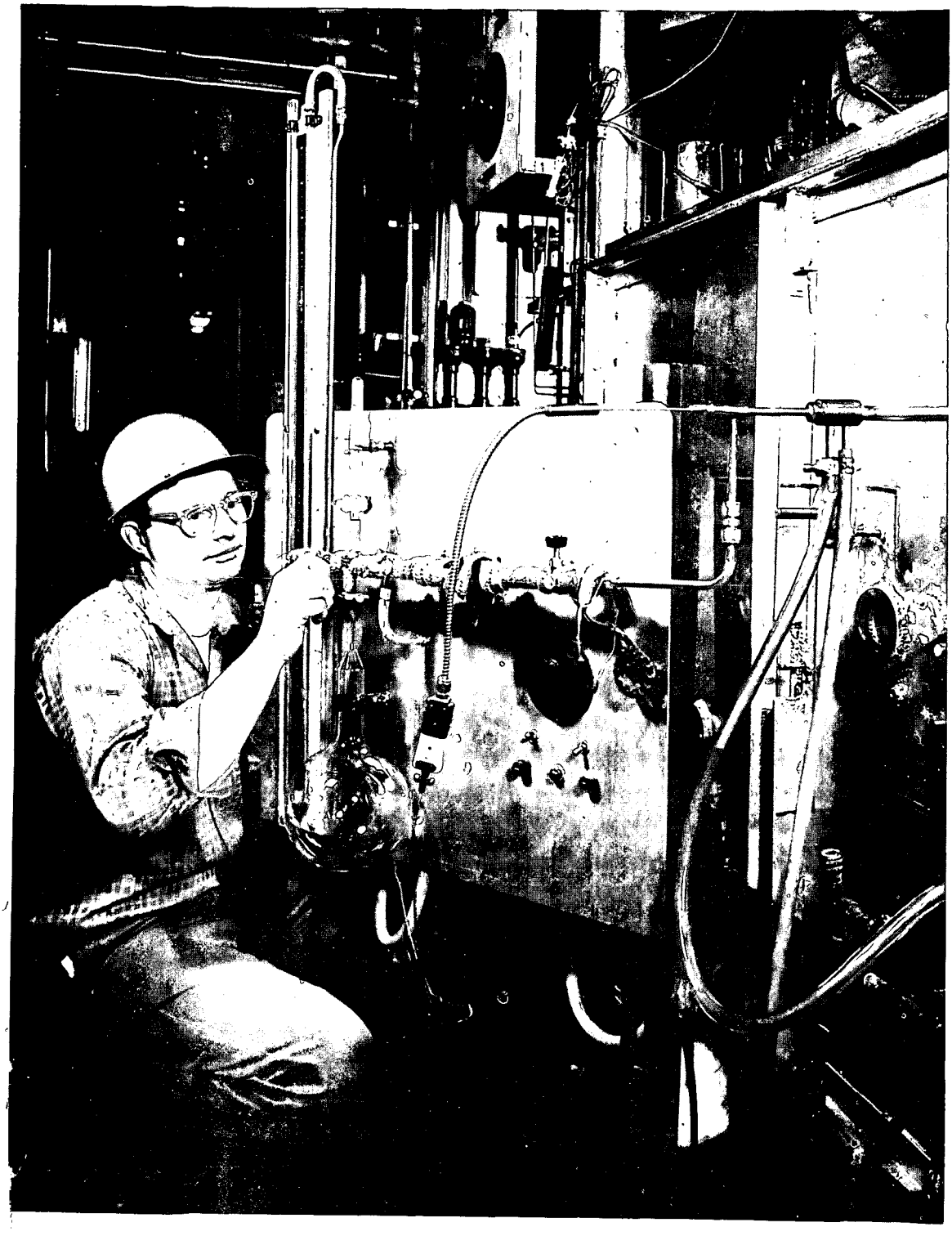

Figure 6.- Sampling combustion gases from experimental pulverized-coal-fired furnace.

mass spectrometry. The values of nitrogen oxides reported here include NO plus NO_2. No attempt was made to determine these oxides separately. For the nitrogen oxides determination a 1,600 cc sample was taken. Light transmission in the treated sample was measured on a Bausch and Lomb[5] "Spectronic 20" spectrophotometer at a wavelength of 410 mμ.

Fly ash was sampled isokinetically from the stack during these tests and analyzed for carbon content to determine the efficiency of combustion.

Coal

The coal used in these tests was a high-volatile B bituminous. The analysis is given in table 1. This particular coal was chosen for its high ash-fusion temperature to eliminate plugging of the probe caused by molten ash. The coal was ground so that 95 percent of it would pass through a 325-mesh screen before being placed in the feeder. The feeder is a vibrated screw of commercial design driven by a variable speed drive. The screw discharges on to an inclined plane so as to eliminate pulsations in the coal feed due to the double-lead screw. The coal is picked up by the primary combustion air as it drops from the inclined plane.

---

[5] Reference to specific makes or models of equipment is made to facilitate understanding and does not imply endorsement of such devices by the Bureau of Mines.

TABLE 1.- Analysis of coal

Proximate, weight percent	
Moisture	0.3
Volatile matter	36.3
Fixed carbon	54.9
Ash	8.5
Ultimate, weight percent	
Hydrogen	5.3
Carbon	77.1
Nitrogen	1.3
Oxygen	6.9
Sulfur	0.9
Ash	8.5
Heating value	13,670 Btu/lb
Ash fusibility - initial deformation temperature	> 2,910° F

EXPERIMENTAL RESULTS

Effect of Air-to-Coal Ratio

As a base case, coal was burned at 2 lbs an hour with combustion air supplied at 22 percent in excess of stoichiometric requirements. The total combustion air was distributed as follows: 22 percent primary, 5 percent secondary, and 73 percent tertiary. Oxides of nitrogen reached a maximum concentration of 780 ppm at the point of highest measured temperature of the flame, 2,440° F, and decreased to 550 ppm at the stack as the combustion gas cooled. As the gas cools nitric oxide dissociates into N_2 and O_2, however the rate of dissociation decreases rapidly with falling temperature. Although the temperature of the combustion gas leaving the stack in this experimental unit is 500°-600° F higher than the gas leaving the stack from a power plant, this additional cooling would have very little effect on the NO_x concentration. An NO_x concentration of 550 ppm at 4.0 percent oxygen is the equilibrium concentration at 2,230° F. Carbon content in the fly ash was 2.0 percent indicative of a carbon combustion efficiency of 99.8 percent.

On lowering the quantity of combustion air to 105 percent of stoichiometric the NO_x concentration at the stack was lowered to 210 ppm, a reduction of 62 percent relative to the base case. The carbon content in the fly ash rose to 13.8 percent--a carbon combustion efficiency of 98 percent. Further lowering of the combustion air to stoichiometric decreased the NO_x content to 105 ppm--a reduction of 81 percent. However the carbon content of the fly ash rose to 42.3 percent. These results are plotted as curves 1, 2, and 4 in figure 7 and tabulated in table 2.

Two-stage Combustion

As industry prefers to operate its pulverized-coal-fired furnaces at excess air levels of approximately 20 percent because of considerations of heat transfer and combustion efficiency, it was decided to maintain about 20 percent excess air and at the same time take advantage of the effect of reduced air flow in the flame on NO_x formation. This was accomplished by supplying 5 percent excess air in the primary combustion zone and injecting additional air for secondary combustion just beyond the flame front, as shown in figure 2, to bring the total excess air to 22 percent. The injected air was heated to 1,940° F, the combustion gas temperature at point of admittance in port 3, and dispersed in front of the

TABLE 2.- Furnace operating conditions with variations in percentage of excess air

Excess air, %	Port No 1			Port No 2			Port No 3			Port No 4			Stack			Carbon in ash, %
	NO_x, ppm	Temp, °F	O_2, %	NO_x, ppm	Temp, °F	O_2, %	NO_x, ppm	Temp, °F	O_2, %	NO_x, ppm	Temp, °F	O_2, %	NO_x, ppm	Temp, °F	O_2, %	
0	630	2480	1.2	320	2190	0.4	265	2120	0.4	255	1850		105	800	0.2	42.3
5	600	2375	0.7	440	2275	0.4	340	2070	2.2	300	1900	1.9	210	975	1.1	13.8
22	690	2335	3.5	780	2440	2.0	590	2090	4.3	590	1950	4.0	550	975	4.0	2.0

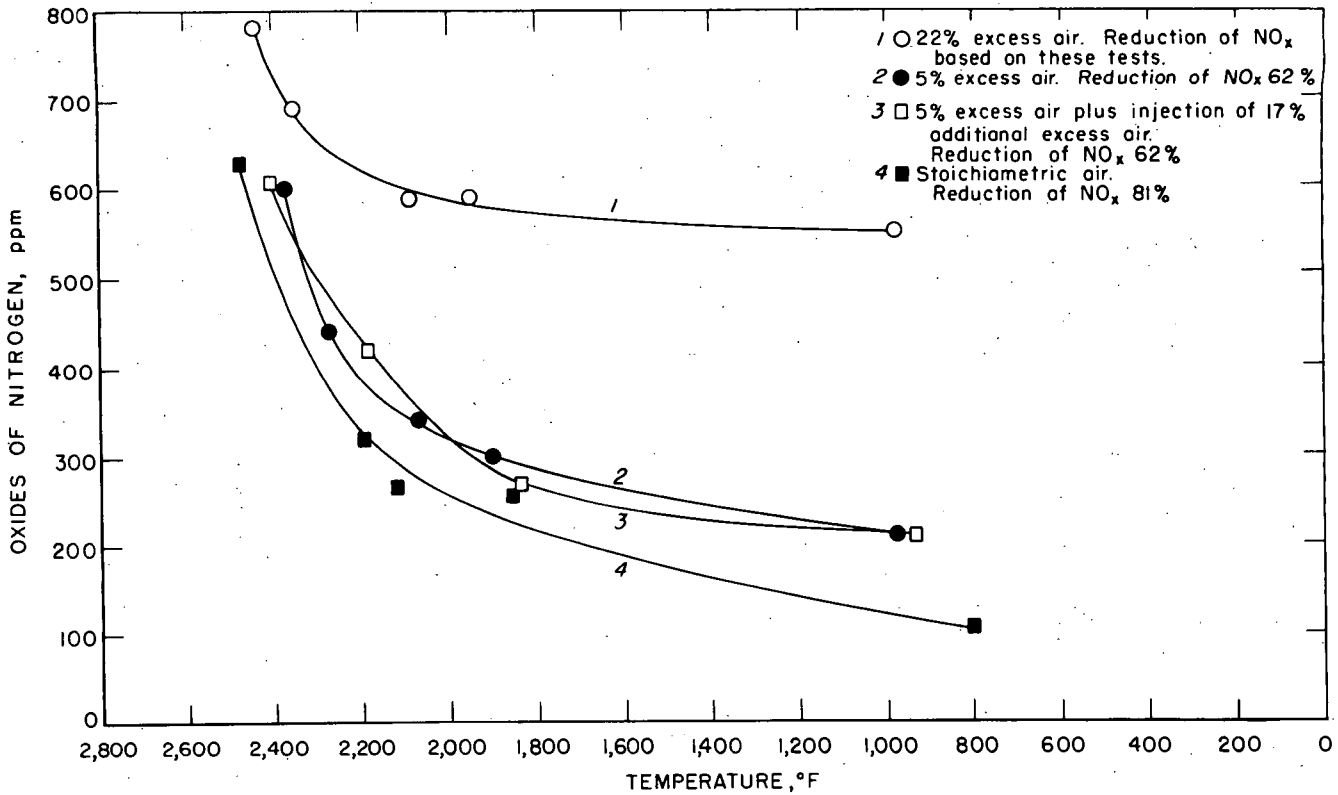

Figure 7. — NO_x concentration as a function of excess combustion air.

1-5-66 L-9146

flame zone through a series 1/32-inch apertures. This high preheat was necessary to prevent quenching in this small unit and would not be necessary in a commercial installation. The concentration of NO_x at the stack was 210 ppm, a reduction of 62 percent compared to the base case, and equal to that obtained in the earlier test using a total of 105 percent of the stoichiometric air requirement. With the above 2-stage operation the carbon in the fly ash was 6.6 percent--a carbon combustion efficiency of 99.2 percent. Comparison of the 2-stage operation with single stage operation of 5 and 22 percent excess air is shown in figure 7. By injecting the 17 percent additional air into port 2 rather than port 3, the air entered in the tip of the flame rather than downstream of the flame. As shown in table 3 the NO_x concentration at the stack was 320 ppm, a reduction of 42 percent, and the carbon in the fly ash was approximately the same, 7.3 percent. For another comparison a stoichiometric amount of air was admitted in the primary combustion zone with 22 percent additional in port 3. The NO_x concentration at the stack was 265 ppm and the carbon in the fly ash 14.6 percent.

TABLE 3.- Furnace operating conditions with 2-stage injection of combustion air

Excess air to primary zone, %	Port No 1			Port No 2			Port No 3			Port No 4			Stack			Carbon in ash, %
	NO_x, ppm	Temp, °F	O_2, %	NO_x, ppm	Temp, °F	O_2, %	NO_x, ppm	Temp, °F	O_2, %	NO_x, ppm	Temp, °F	O_2, %	NO_x, ppm	Temp, °F	O_2, %	
0	610	2510	0.9	405	2270	1.4	22% air injection			285	1800	3.8	265	870	4.0	14.6
5	670	2510	1.8	420	2185	1.4	17% air injection			270	1840	5.0	210	930	3.9	6.6
5	610	2400	1.4	17% air injection			395	2040	5.3	385	1870	4.7	320	840	3.9	7.3

Gas Recirculation

Recirculation of flue gas is used in boiler operation to maintain thermal efficiency under reduced load. As recirculation lowers the flame temperature it could result in lowering the nitrogen oxide concentration. To test this hypothesis, flue gas was taken from the stack at 900° F mixed with the tertiary combustion air, and returned to the furnace through the tertiary-air inlet tubes. A sketch of the recycle system is shown in figure 8. The volume of recirculated gas ranged from 0 to 22 percent of the total combustion air. Flue gas addition in the larger volumes decreased the stability of the flame. The oxygen content in the combustion zone increased and the flame temperature decreased with gas recirculation. These two effects counteracted each other in the formation of nitrogen oxides. Without gas recirculation the NO_x concentration in the stack was 490 ppm. With 10 and 15 percent recirculation there was no decrease in the NO_x content although the flame temperature decreased from 2,580° to 2,490° F. At 20 percent recirculation the NO_x content dropped to 420 ppm a decrease of 14 percent. The flame temperature at this higher rate of gas recirculation was still lower, 2,380° F. This small decrease in NO_x is not considered sufficient to warrant use of gas recirculation as a means of reducing nitrogen oxide pollution. These results are given in table 4.

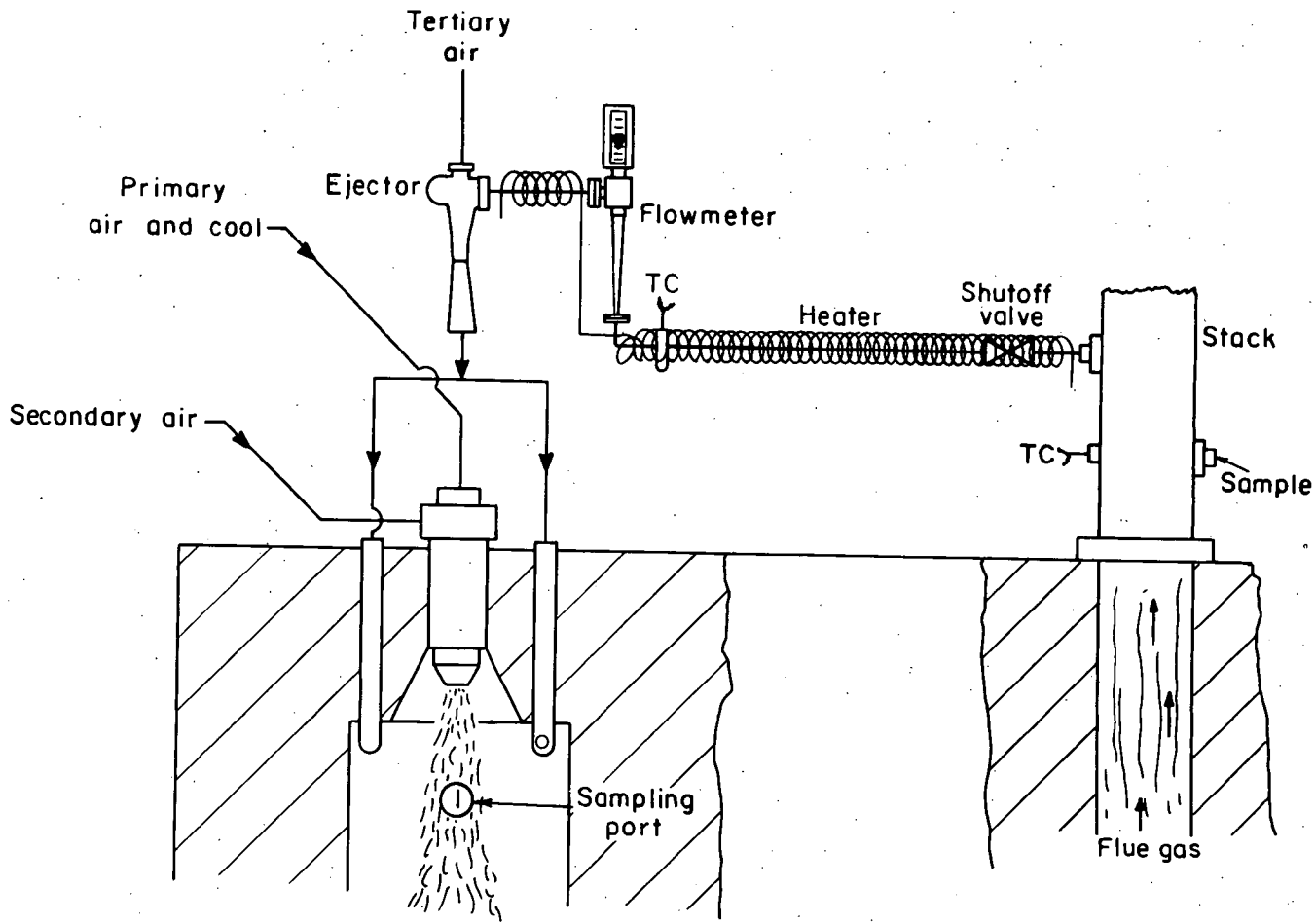

Figure 8.- Recirculation of flue gases in nitric oxide study.

TABLE 4.- Furnace operating conditions using gas recirculation

Ratio of recirculated gas to combustion air	Port No 1			Port No 2			Port No 3			Port No 4			Stack		
	NO_x, ppm	Temp, °F	O_2, %	NO_x, ppm	Temp, °F	O_2, %	NO_x, ppm	Temp, °F	O_2, %	NO_x, ppm	Temp, °F	O_2, %	NO_x, ppm	Temp, °F	O_2 %
0	700	2580	1.4	560	2210	2.2	540	2020	3.7	510	1820	4.3	490	920	4.1
0.10	720	2520	2.2	740	2280	3.9	610	1980	3.1	600	1860	4.0	500	940	4.0
.15	760	2490	2.3	500	2100	3.1	530	2040	4.1	510	1820	4.7	500	950	4.0
.22	720	2380	2.4	450	2140	3.1	460	2010	3.8	460	1850	4.2	420	910	4.1

Combustion Temperature

The effect of flame temperature in the primary combustion zone upon nitrogen oxide formation was investigated. The flame temperature was varied by adjusting the coal feed rate from 1 to 4 lbs of pulverized coal an hour. At these coal rates the heat flux ranged from 18,000 to 72,000 Btu/hr ft^3. The heat flux in a commercial pulverized-coal-fired furnace may range from 50,000 to 100,000 Btu/hr ft^3. The combustion air was maintained at 122 percent of stoichiometric requirements. Flame temperatures measured in the center of the primary combustion zone were 2,280, 2,440, and 2,800° F burning coal at 1, 2 and 4 lb an hour. NO_x concentrations varied with the coal burning rate and the temperatures in the furnace--a maximum concentration of 830 ppm was obtained at the maximum coal rate. NO_x concentrations dropped as the combustion gas was cooled flowing through the furnace. Stack concentrations of NO_x were 320, 550, and 745 ppm, respectively. At 1 lb of coal an hour combustion gas temperatures dropped rather rapidly in the system resulting in the higher carbon content in the ash of 13.3 percent. These results are given in table 5 and plotted in figure 9. Although increasing the coal burning rate increases the temperature of combustion, other secondary effects such as gas residence time and intensity of radiation may also play a role in nitrogen oxides formation.

TABLE 5.- Furnace operating conditions with variations in coal-feed rate

Combustion rate, lb/hr	Port No 1			Port No 2			Port No 3			Port No 4			Stack			Carbon in ash, %
	NO_x, ppm	Temp, °F	O_2, %	NO_x, ppm	Temp, °F	O_2 %	NO_x, ppm	Temp, °F	O_2, %	NO_x, ppm	Temp, °F	O_2, %	NO_x, ppm	Temp, °F	O_2, %	
1	660	2280	3.2	415	1860	4.0	360	1725	3.9	355	1580	5.0	320	635	4.2	13.3
2	690	2335	3.5	780	2440	2.0	590	2090	4.3	590	1950	4.0	550	975	4.0	2.0
4	815	2800	0.5	830	2670	2.5	750	2385	4.0	685	2215	3.8	745	1255	4.3	1.1

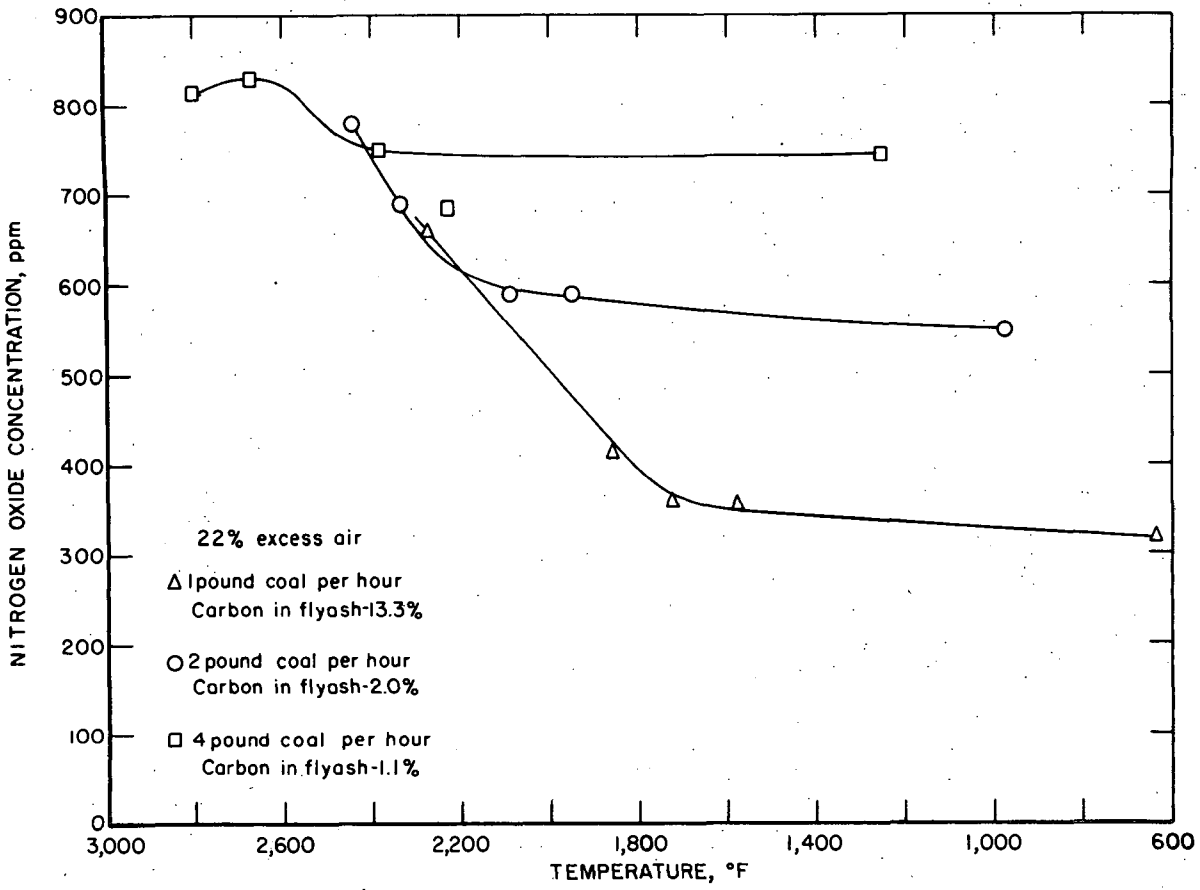

Figure 9.- NO_x concentration as a function of combustion temperature obtained in varying coal burning rate.

CONCLUSIONS

1. In pulverized-coal combustion the concentration of nitrogen oxides in the stack varies directly with excess air and the flame temperature. Although the NO_x concentration in the furnace effluent fell as the amount of excess air was lowered, the combustion efficiency was adversely affected and very likely in a commercial installation the rate of heat transfer across heat-absorbing surfaces would be similarly affected. At 5-percent excess air fed to the primary combustion zone compared with 22 percent, a 62-percent reduction of NO_x was obtained at carbon combustion efficiencies of 98 percent.

2. By supplying 5-percent excess air to the primary combustion zone and an additional 17 percent injected just beyond the flame front the same reduction in NO_x was obtained as by operating at a total of only 105 percent of stoichiometric air. In addition the carbon combustion efficiency was improved--achieving 99.2 percent. With this injection technique not only is a substantial reduction in nitrogen oxides obtained but as the same amount of air is used as in conventional coal-burning plants no significant change in equipment is required and the same rate of heat transfer is expected.

3. Gas recirculation was not effective as a means of lowering nitrogen oxides formation. No sizeable reduction was obtained with gas recirculation rates as high as 22 percent of the combustion air rates.

LITERATURE CITED

(1) American Conference of Governmental Industrial Hygienists, 1014 Broadway, Cincinnati, Ohio 45202.

(2) ASTM Standards D1608-60. Standard Method of Test for Oxides of Nitrogen in Gaseous Combustion Products (Phenol-Disulfonic Acid Procedure).

(3) Austin, H.C., and Chadwick, N.L. Control of Air Pollution from Oil-Burning Power Plants. Mech. Engineering, v. 82, 1960, pp. 63-66.

(4) Austin, H.C., and Sedor, P. Combustion Scheme Cuts Power Plant Smog Components. Electrical World, v. 157, 1962, pp. 51-53.

(5) Barnhart, D.H., and Diehl, E.K. Control of Nitrogen Oxides in Boiler Flue Gases by Two-Stage Combustion. J. Air Poll. Control Assoc., v. 10, 1960, pp. 397-406.

(6) Beatty, R.L., Berger, L.B., and Schrenk, H.H. Determination of the Oxides of Nitrogen by the Phenoldisulfonic Acid Method. Bureau of Mines Rept. Invest. 3687, 1943.

(7) Brant, J.W.A. Human Cardiovascular Diseases and Atmospheric Air Pollution in Los Angeles, Calif. Internat. J. Air and Water Poll., v. 9, 1965, pp. 219-231.

(8) Engdahl, R.B. Trends in Technology and Economics of Energy from Fuels. II. Heating, Transportation, and Air Pollution. Presented at A.S.M.E. Annual Meeting, Nov. 7-11, 1965, Chicago, Ill. Paper 65-WA/FU-6.

(9) Haagen-Smit, A.J., Bradley, C.E., and Fox, M.M. Ozone Formation in Photochemical Oxidation of Organic Substances. Ind. Eng. Chem., v. 45, 1953, pp. 2086-2089.

(10) Kurtzrock, R.C., Bienstock, D., and Field, J.H. A Laboratory-Scale Furnace Fired with Pulverized Coal. J. Inst. Fuel, v. 36, 1963, pp. 55-61.

(11) Maga, J.A. Considerations in Setting Standards for Oxides of Nitrogen. J. Air Poll. Control Assoc., v. 15, 1965, pp. 561-564.

(12) Nelson, H.W. Trends in Technology and Economics of Energy from Fuels. I. Fuel Availability, Transport of Energy, Gasification and Carbonization. Presented at A.S.M.E. Annual Meeting, Nov. 7-11, 1965, Chicago, Ill.

(13) Report of the Surgeon General to the U.S. Congress. Motor Vehicles, Air Pollution, and Health. 87th Congress, 2nd Session, House Document No. 489,427, 1962.

(14) Sensenbaugh, J.D., and Jonakin, J. Effect of Combustion Conditions in Nitrogen Oxide Formation in Boiler Furnaces. Presented at A.S.M.E. Annual Meeting, Nov. 27-Dec. 2, 1960, New York, N.Y. Paper 60-WA-334.

(15) Stephens, E.R., Hanst, P.L., Doerr, R.C., and Scott, W.E. Reactions of Nitrogen Dioxide and Organic Compounds in Air. Ind. Eng. Chem., v. 48, 1956, pp. 1498-1504.