PRESENT STATUS OF PROCESSES FOR GASIFICATION OF PETROLEUM

by

Henry R. Linden

Institute of Gas Technology
Chicago, Illinois 60616

INTRODUCTION

Gasification of petroleum fractions, ranging from liquefied petroleum gases through the highest boiling Bunker "C" fuel oils, is practiced throughout the world for the purpose of producing basically two classes of fuel gases: town gases of approximately 450 to 550 Btu/SCF gross heating value, and high-Btu gases with heating values ranging from 900 to 1100 Btu/SCF. The lower heating value town gases are used in areas in which fuel gas distribution and utilization still follow the practices of the manufactured gas era during which coal was used as the basic raw material. They are characterized by a relatively high hydrogen and carbon monoxide content, and a high burning velocity. In this way, they simulate the properties of the dominant source of gas supply – coal retort, coke oven and water gas. The high Btu gases are produced in areas which have converted to natural gas as the prime source of supply and, therefore, they attempt to simulate, as closely as possible, the properties of methane – the major constituent of natural gas.

The United States is typical of an area in which essentially all of the gas supply is natural gas and the only significant amount of gas manufactured is to meet peak demands. The dominant source of these gases is liquefied petroleum gas mixed with air to reduce its heating value, with much lesser amounts of high heating value gas produced by various petroleum oil gasification processes and only a negligible amount derived from coal. Much of Europe and parts of Japan and Australia are in an intermediate stage. Here, substantial amounts of natural gas are becoming available, but gas is still largely derived from coal-based processes and most of the gas distribution and utilization equipment is for low heating value manufactured gas.

KEY PROPERTIES OF PETROLEUM FEEDSTOCKS

The properties of petroleum feedstocks for the various gasification processes cover a wide range so that feedstock selection to give optimum results is an important consideration. The feedstock characteristic of primary importance is the carbon to hydrogen ratio, normally expressed in terms of the weight ratio. This is a useful parameter for correlating key properties of petroleum hydrocarbons. The C/H weight ratio was first specifically applied to the selection of feedstocks for gas making processes – primarily pyrolysis and hydrogenolysis – in publications from the Institute of Gas Technology, and is now in general use throughout the world for characterization of petroleum feedstocks for all types of gas making processes. As part of the work at the Institute of Gas Technology, simple means were developed for estimating the C/H weight ratio from physical properties such as API gravity and average boiling point, API gravity and viscosity, and API gravity, aniline point and average boiling point. The lower the C/H ratio, the greater its value for gas making. The reason for this is that fuel gases generally contain a relatively low ratio of bound carbon to free and bound hydrogen, compared to the C/H ratios of commercial petroleum products. Thus, to convert petroleum hydrocarbons to gas, it is necessary to use one or a combination of the following processes:

1) Elimination of excess carbon in the form of coke, lampblack and high carbon content liquid products (aromatics). This is the principle used in high-temperature thermal cracking (pyrolysis) processes.

2) Destructive hydrogenation to convert excess carbon to low molecular weight paraffins and olefins. This is the principle used in hydrogenolysis processes

3) Oxidation of excess carbon to carbon monoxide and dioxide, either by decomposition of steam at high temperatures or by partial oxidation with free oxygen. This principle is used in a variety of processes using steam or steam-air mixtures and a catalyst, or oxygen without a catalyst.

The greater the excess of carbon over hydrogen, the more difficult gasification becomes. Thus, methane, the hydrocarbon with the lowest C/H weight ratio (C/H= 3), is already a gas and also the hydrocarbon most readily converted (reformed) to other gases, such as mixtures of carbon monoxide and hydrogen. Propane and butane (C/H=4.5 and 4.8, respectively) are also gases at normal temperature and pressure and are excellent feedstocks for reforming to fuel gases of lower heating value. Near the end of the scale are low-grade residual fuel oils which have C/H weight ratios as high as 10 and which are, therefore, not desirable feedstocks. The effect of C/H ratio on gasification yields is greatest in pyrolysis, less in hydrogenolysis and gasification with steam or steam-air mixtures, and of least effect in partial oxidation, but it is still important in all these gasification processes.

Another feedstock property of great importance in gasification is the coke forming tendency. This is, of course, indirectly related to C/H weight ratio but more directly dependent on the boiling range or the equivalent molecular weight range of the feedstock, coupled with the distribution of C/H ratio throughout the boiling range. As the boiling point or molecular weight of any class of hydrocarbon – paraffin, olefin, naphthene, aromatic, etc. – increases, its coke forming tendency increases. A simple empirical measure of this coke forming tendency is the Conradson carbon residue value. This is in essence, a destructive distillation test under standarized conditions which can, therefore, be directly related to coke forming tendency in pyrolysis processes. However, in all petroleum gasification processes, the feedstock is exposed to temperatures above its limit of thermal stability, so that pyrolysis occurs to various degrees.

The occurrence of coke formation would make any continuous process eventually inoperable through blockage of the reactor. It would also reduce the activity of any catalysts used in the gasification step. As a result, continuous processes employing empty or catalyst-filled reactors are generally limited to distillate feedstocks, and frequently distillate feedstocks with very low distillation endpoints and C/H ratios to reduce coke forming tendencies to an absolute minimum. Exceptions are processes using oxygen for partial combustion of the feedstock at very high temperatures. In these, coke accumulation is prevented by continuous burn-off.

An indication of the dominance of the coke deposition problem in gas manufacture from petroleum feedstocks is the development of two types of reactor systems particularly designed to overcome this limitation. One is the cyclic system in which deposited coke can be burned off at suitable intervals. The others are continuous systems in which solids pass through the reaction zone to allow deposition and removal of the coke.

Also of great importance is the sulfur content of petroleum feedstocks. In gas manufacture, the sulfur in the feedstock is converted into gaseous sulfur compounds such as hydrogen sulfide, carbon disulfide, carbon oxysulfide, and the variety of mercaptans and other organic sulfur compounds. These contaminants must be reduced to acceptable levels before the gas is distributed. In many gasification processes, there is an additional disadvantage to high sulfur content of the feedstock in that sulfur-sensitive catalysts are employed. In fact, in some processes, sulfur has to be removed from the feedstock before gasification, to levels as low as one part per million or less to avoid poisoning and deactivation of the catalyst.

In Table 1, typical properties of gasification feedstocks are summarized. In addition to the properties discussed above, certain properties affecting the ease and safety of storing and pumping are given such as pour point, the water and sediment content and the flash point.

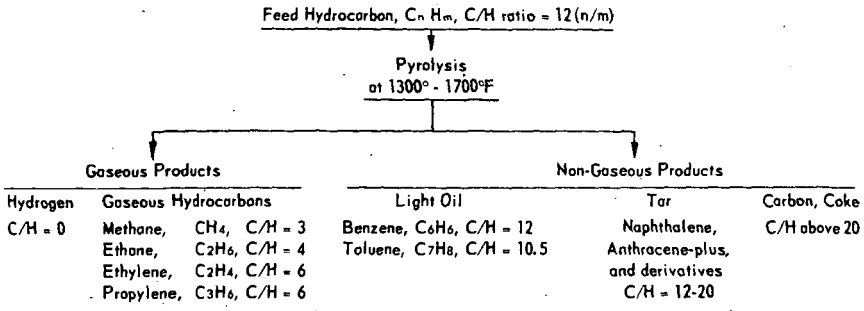

Figure 1.—SCHEMATIC PRODUCT DISTRIBUTION IN HIGH-TEMPERATURE VAPOR-PHASE CRACKING

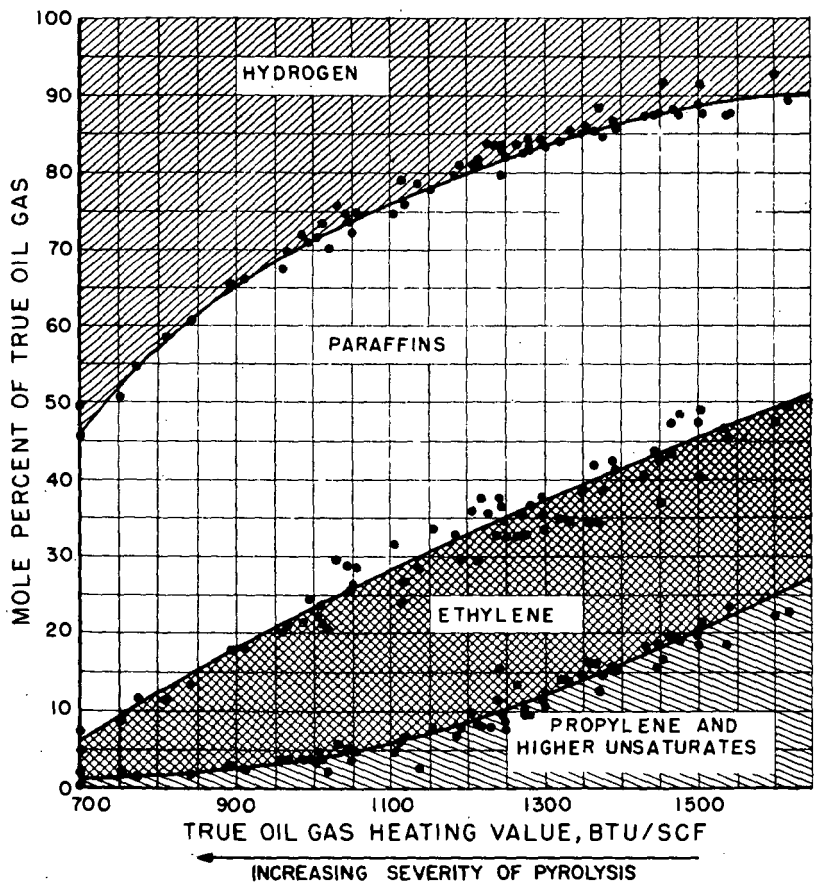

Figure 2.—RELATIONSHIP OF COMPOSITION AND TRUE OIL GAS HEATING VALUE

PYROLYSIS PROCESSES

Thermal cracking or pyrolysis reduces the average molecular weight of hydrocarbon mixtures by subjecting them to temperatures at which they are not stable; that is, at which the energy holding together some of the carbon and hydrogen atoms in the molecule is overcome. In its extreme form, pyrolysis can, therefore, result in the formation of carbon and hydrogen as the principal products. This occurs, for example, in the manufacture of carbon black. More generally, however, the desired products are hydrocarbons of lower molecular weight than the hydrocarbon making up the feedstock.

Pyrolysis is not a very selective operation and normally results in a broad spectrum of products, ranging from those of lowest molecular weight – hydrogen and methane – to the highest – pitch and coke. However, by proper control of operating conditions – pressure, temperature and residence time – the relative abundance and composition of the gaseous, liquid and solid products can be controlled to a considerable extent.

In the petroleum industry, mild pyrolysis is used in refinery operations to increase the ratio of low-boiling (distillate) products to high-boiling (residual) products. Thus, what is desired is breakage of carbon-carbon bonds without too radical a rearrangement of the hydrocarbon molecules. To achieve this, the temperature range is usually limited to 800°-1200°F, and superatmospheric pressures are generally employed to minimize gas formation.

The petroleum industry also uses pyrolysis of low-boiling feedstocks, such as propane, butane and naphthas, to produce ethylene and propylene and some higher molecular weight olefins and diolefins. This is done in externally heated alloy tubes at the lowest practical total pressures and with substantial steam dilution to lower the partial pressure and the residence time of the reaction products. This promotes gaseous olefin formation and minimizes any tendency to pitch and coke formation which could cause tube blockage. Pyrolysis severities are greater than in the type of thermal cracking practiced in oil refining processes but still below those necessary to obtain acceptable fuel gas yields and compositions. A substantial amount of pilot plant and full scale plant test work has been done to develop continuous pyrolysis processes for production of high heating value (high-Btu) gas employing tube furnaces, but this has not yet proved commercially feasible.

In the gas industry, pyrolysis of petroleum oils is primarily used to produce high heating value gases for enriching lower heating value gases, or for supplementing natural gas. The operating conditions used are relatively severe compared to the refinery and petrochemical pyrolysis processes: 1300° to 1700°F, residence times of one to five seconds, near-atmospheric pressure and the use of small amounts of steam as a carrier gas. Within this range of conditions, inert-free product gas heating values range from 900 to 1600 Btu/SCF and the weight percent conversion to gas is relatively constant and near the optimum obtainable at approximately one atmosphere partial pressure of gaseous reaction products.

Pyrolysis Fundamentals

The yields of gaseous and nongaseous products over this relatively narrow range of operating conditions are determined largely by the feedstock C/H weight ratio. The reason for this is given in Fig. 1 which shows schematically that the gaseous products consist essentially of high hydrogen content, low C/H ratio materials, whereas the nongaseous products consist of low hydrogen content, high C/H ratio materials. Thus, the gas yield can be related directly to feedstock C/H weight ratio. The weight percent gas yield, in turn, is directly related to the recovery of the heat of combustion of the feedstock in the form of stable gas (Btu heat of combustion or thermal recovery). This is shown in Table 2 with data derived from correlations based on laboratory pyrolysis tests. Typical test results of this type

Table 1. —PROPERTIES OF PETROLEUM PRODUCTS USED FOR GAS MANUFACTURE

	Propane	Butane	Light Naphtha, Natural Gasoline	Heavy Naphtha	Kerosine	No. 1 Diesel Oil, Stove or No. 1 Fuel Oil	No. 2 Diesel Oil, Premium Gas Oil	No. 2 Fuel Oil	Reduced Crude, Heavy Gas Oil, Premium Residuum	No. 6 or Bunker "C" Fuel Oil
Gravity										
API			65-90	55-65	41-46	38-43	35-38	32-36	19-22	5-15
Specific, 60°F/60°F	0.51	0.58	0.64-0.72	0.72-0.76	0.80-0.82	0.81-0.83	0.83-0.85	0.84-0.87	0.92-0.94	0.97-1.04
Viscosity										
Centistokes at 100°F										
Saybolt Universal Seconds at 100°F					1.4-1.8	1.6-2.2	2.4-3.0	2.4-3.0		
Saybolt Furol Seconds at 122°F						32-34	34-36	34-36		
Conradson Carbon Residue, wt %	None	None	None	None	Nil	Trace	Trace	Trace	15-50	45-300
Pour Point, °F					< 0	< 0	< 10	< 10	3-7	5-18
Sulfur, wt %	< 0.1	< 0.1	< 0.1	< 0.1	< 0.1	Nil-0.15	0.1-0.4	0.1-0.6	< 2.0	1-4
Water and Sediment, wt %	None	None	None	None	Nil	Trace	Trace	< 0.05	< 1.0	0.1-1.0
Distillation, °F										
10%	Initial boiling Point −50°F	Initial Boiling Point 15°F	80-140	100-160	370-400	380-410	410-450	410-450	550-650	550-700
50%			110-210	200-250	420-450	430-460	480-520	490-520	800-900	850-1000
90%			210-250	300-350	480-510	480-520	550-590	560-600		
Endpoint			250-300	370-420	500-560	500-560	590-640	610-650		
Flashpoint, °F				80-100	100-130	120-170	120-170	130-180	>150	>150
Aniline Point, °F						140-160	140-160	130-150		
Carbon-Hydrogen Weight Ratio	4.5	4.8	5.0-5.7	5.4-6.0	6.0-6.3	6.2-6.4	6.3-6.5	6.5-7.0	6.9-7.3	7.5-10.0
Gross Heating Value, Btu/lb	21,500-21,700	21,100-21,300	20,300-21,000	20,000-20,600	19,800-20,000	19,700-19,900	19,600-19,800	19,300-19,700	19,000-19,400	17,800-19,000

Table 2. –PROCESS DATA FOR HIGH-BTU OIL GAS PRODUCTION

C/H Weight Ratio	Gas Yield, weight percent of make oil	Btu Recovery: MBtu Per Pound of Make Oil	Btu Recovery: Percent of Make Oil Heat of Combustion	Liquid Products Plus Coke, weight percent of make oil
5.0	74	16.7	80	26
5.5	68	15.3	75	32
6.0	63	13.9	70	37
6.5	58	12.5	64	42
7.0	53	11.1	58	47
7.5	48	9.8	52	52
8.0	42	8.7	47	58
8.5	37	7.7	42	63
9.0	32	6.8	37	68
9.5	27	6.1	34	73

Note: Make oil is the process oil feed and does not include any oil used to meet the heat requirements of the process (heat oil).

are given in Table 3 for No. 2 Diesel Oil. It can be seen that as the pyrolysis seve ity — that is, the temperature and/or residence time — is increased, increased volu of gas containing substantially more hydrogen and less higher molecular weight hy carbons are produced. This is accompanied by increased coke formation, and for mation of lesser amounts of liquid products having a higher specific gravity and fre carbon content. However, Btu recoveries remain relatively constant except that at very severe pyrolysis conditions they tend to decrease somewhat. Incomplete pyrolysis at low severities is indicated by the high paraffin content (high unsulfonatable residue) of the liquid products.

An excellent empirical method for correlating gaseous pyrolysis product composition with operating conditions is by means of the true (inert or diluent-free oil gas heating value — the heating value of the hydrogen-gaseous hydrocarbon fraction of the pyrolysis products. As shown in Fig. 2, this applies to a wide range of feedstocks and pyrolysis severities at relatively constant oil gas partial pressures. The true oil gas heating value may also be used to correlate the nongaseous produc yields and compositions for any given feedstock and true oil gas partial pressure. As would be expected, the true oil gas heating value is an empirical measure of pyrolysis severity.

The essential independence of gaseous products composition on feedstock properties exists only when the primary decomposition reactions of the feedstock have been completed; otherwise, the product distribution may be distorted. For natural gasoline, naphtha and higher boiling petroleum oils, gaseous product distribution will be independent of feedstock properties at reaction temperatures above 1300°F and residence times above 1 second. Propane and butane, as a result of their higher thermal stability, will require somewhat more severe conditions, and, if used as feedstocks at low pyrolysis severities, will appear in abnormal concentrations in the gaseous products.

It has been found in extensive laboratory tube furnace studies at the Institute of Gas Technology that the gaseous product distribution in high-severity pyrolysis operations can be interpreted by assuming that it is determined primarily by these overall reactions:

a) Hydrogenation of olefins to paraffins with an equal number of carbon atoms, such as:

$$C_2H_4 + H_2 \rightarrow C_2H_6$$

$$C_3H_6 + H_2 \rightarrow C_3H_8$$

or in more general terms:

$$C_nH_{2n} + H_2 \rightleftarrows C_nH_{2n+2} \qquad \text{(System 1)}$$

where n, the number of carbon atoms, can be 2, 3, or more.

b) Destructive hydrogenation of paraffins to methane, and a paraffin with one less carbon atom, such as:

$$C_2H_6 + H_2 \rightleftarrows 2CH_4$$

$$C_3H_8 + H_2 \rightleftarrows CH_4 + C_2H_6$$

or in more general terms:

$$C_nH_{2n+2} + H_2 \rightarrow CH_4 + C_{n-1}H_{2n} \qquad \text{(System 2)}$$

Table 3.—LABORATORY PYROLYSIS TEST RESULTS FOR THE PRODUCTION OF HIGH-BTU OIL GASES FROM NO. 2 DIESEL OIL AT ATMOSPHERIC PRESSURE WITH APPROXIMATELY 10-30 VOLUME PERCENT STEAM OR INERT CARRIER GAS DILUTION
(From Reference 5)

Oil				
°API	37.3			
Carbon/Hydrogen Weight Ratio	6.39			
Conradson Carbon Residue, wt %	0.004			
Residence Time, sec	1.20	5.15	1.58	2.56
Reaction Temp, °F	1400	1400	1550	1570
Btu Recovery, MBtu/gal	87.6	90.8	86.8	81.5
True Oil Gas Yield, SCF/gal	61.5	72.8	73.5	79.4
Liquid Products Yield, wt % *	39.5	37.7	38.6	42.5
Carbon Deposition, wt %	0.4	1.3	2.9	3.3
True Oil Gas Properties				
Composition, mole %				
Hydrogen	13.8	17.8	20.4	26.3
Methane	33.4	42.5	43.6	44.0
Ethane	4.9	4.7	3.1	2.4
Propane	0.4	0.9	0.1	--
Iso-Butane	0.1	--	--	--
n-Butane	--	--	--	--
Pentane	--	--	--	--
Ethylene	29.5	25.6	26.2	22.8
Propylene	11.1	3.8	2.9	1.1
Butylenes	2.1	0.6	0.3	0.2
Butadienes	2.5	1.2	1.0	0.7
Pentenes	0.4	--	--	--
Cyclopentadiene	0.6	0.3	0.2	0.2
Acetylene	0.3	0.4	0.5	0.4
Benzene	0.8	1.9	1.4	1.8
Toluene	0.1	0.3	0.3	0.1
Total	100.0	100.0	100.0	100.0
Heating Value, Btu/SCF **	1425	1247	1182	1025
Specific Gravity, Air = 1 **	0.843	0.706	0.695	0.600
Liquid Products Properties				
Specific Gravity, 60°F/60°F	0.970	1.070	1.075	1.088
Free Carbon, wt %	0.3	3.6	6.7	7.6
Sulfonation Index, ml unsulfonated residue/100 g tar				
For Distillate 0°-300°C	10.9	1.9	6.4	4.8
For Distillate 300°-355°C	0.9	0.6	2.4	0.7

* Corrected to 100% material balance based on volume and specific gravity of total raw product gas, including small amounts of N_2, CO, CO_2 and sulfur compounds produced from oil; true oil gas yields and properties based on hydrogen-hydrocarbon fraction of stabilized gas

** Experimental value corrected to inert-free basis

When n = 2, the forward and reverse reactions of System 1 must be extremely rapid, since ethylene, hydrogen and ethane are always recovered in the approximate chemical equilibrium concentrations corresponding to the effective reaction temperature and pressure. The same appears to be true with propylene-hydrogen-propane (n= 3) and, probably, higher molecular weight gaseous olefin-hydrogen-paraffin subsystems (except when the olefin or paraffin is also the feedstock, and the severity of cracking is too low to allow completion of the primary decomposition reactions).

In comparison to the rapid hydrogenation-dehydrogenation of System 1, methane formation by System 2 is very slow. Consequently, the components in System 2 are recovered in concentrations far removed from those corresponding to chemical equilibrium at the effective reaction conditions. However, the approach to equilibrium of the ethane-hydrogen-methane and propane-hydrogen-methane-ethane subsystems is determined by only the reaction temperature and residence time. Thus, the composition of the major gaseous products of high-temperature pyrolysis can be predicted from the effective temperature, pressure and residence time, and from equilibrium constants for the subsystems covered by Systems 1 and 2. These equilibrium constants, when expressed in terms of the partial pressures of the products and reactants, are dependent on the reaction temperature only.

The abundance of the minor constituents, butadiene and acetylene, is indicated by:

$$C_4H_6 + H_2 \rightleftharpoons 2C_2H_4 \qquad \text{(System 3)}$$

$$C_2H_2 + H_2 \rightleftharpoons C_2H_4 \qquad \text{(System 4)}$$

Similar to System 1, Systems 3 and 4 also appear to closely approach chemical equilibrium in the pyrolysis zone. However, in gas production processes, butadiene, and particularly acetylene, are recovered in less than the equilibrium concentrations corresponding to the effective pyrolysis temperature. This is probably due to continued reaction of these highly reactive constituents at the lower temperatures prevailing in the product offtakes and separators. (Butadiene and acetylene are directly related to the hydrocarbon fragments responsible for the formation of a substantial portion of the liquid products.)

The relationships determining gaseous products distribution which have been described above are of great importance in the selection of the conditions for a process designed to produce methane as the major product. For example, the presently used pyrolysis processes operate at near-atmospheric pressure and relatively short residence times. This favors the production of olefins. To produce a higher percentage of paraffins, higher pressures would have to be used to force to the right the hydrogenation reactions of System 1, and Systems 3 and 4 in conjunction with System 1. This will happen because these reactions are in approximate equilibrium and cause a large overall volume decrease.

An increase in pressure will also produce a higher percentage of methane because of the increased rate of destructive hydrogenation of the higher molecular weight paraffins by the overall reactions of System 2. Further, since methane formation by secondary vapor-phase reaction is so slow, an increase in residence time will result in increased methane concentrations. However, this is the case only within the range of pyrolysis severities used in high heating value gas production.

Unfortunately, an increase in gasification pressure will result in a decrease in feedstock conversion to gaseous products unless hydrogen is added. The same conclusion can be reached from chemical considerations: without an external supply of hydrogen, increases in pressure or in partial pressure of hydrogen-gaseous hydrocarbon constituents will favor the condensation and polymerization reactions of intermediate reaction products which form the high molecular weight nongaseous products; competing reactions which form the low molecular weight gaseous prod-

ucts will consequently be suppressed.

Extensive laboratory pyrolysis studies have shown that nongaseous products formation from the entire range of liquid hydrocarbon fuels can be substantially decreased by the use of a hydrogen-rich carrier gas as a reaction atmosphere. This is accompanied by an increase in the formation of gaseous paraffins by the hydrogenation reactions which maintain equilibrium. As will be shown in the section on hydrogenolysis processes, there exists a combination of hydrogen/hydrocarbon feed ratio, pressure, temperature, and residence time, at which most hydrocarbon fuels can be converted to gaseous products, with only a minor quantity of liquid products formation. Under these conditions, the net Btu recovery (gross Btu recovery less heat of combustion feed hydrogen) approaches the heat of combustion of the hydrocarbon feedstock. However, to achieve this with high C/H ratio and high molecular weight feedstocks requires high pressures.

Conversion of liquid feeds at normal storage temperature into pyrolysis products at 1400°-1500°F requires approximately 1500-2000 Btu per pound, which includes sensible heat, heat of vaporization, and endothermic heat of reaction. The methods of supplying this heat, and the maintenance of continuity of operation under conditions leading to the formation of coke and pitch, are the basic processing problems which have led to the development of the various pyrolysis processes summarized in Table 4 and discussed below in greater detail.

Cyclic Pyrolysis Processes

Cyclic pyrolysis of distillate and residual oils in an atmosphere of steam at near-atmospheric pressures until recently was the only process used commercially to produce high-Btu gas from these feedstocks. This situation existed because manufactured gas companies already had available carbureted water gas sets which could be converted at moderate cost to sets capable of producing 1000 Btu/SCF gas from petroleum feedstocks. This conversion resulted in a substantial increase in the thermal capacity of the set, and in considerable simplification in operation through ultimate elimination of solid-fuel handling. In some of the early development solid fuel was used. Subsequently the use of solid fuel was discontinued for economic reasons and grates were either removed or covered with a refractory screen.

Cyclic pyrolysis processes for converting distillate and residual petroleum oils into high-Btu gas, light aromatics, tar and deposited coke are conducted in refractory-lined or -filled vessels. Deposited coke is burned off by periodic air blasting, supplying part of the process heat requirements. The remainder of the heat to maintain the desired cracking temperature (1300°-1700°F) is supplied by the combustion of heat oil during the blast period. This period is followed by a steam purge, a make period during which process oil is introduced into the heated pyrolysis zone, and finally a second steam purge and a blast purge. The length of a cycle (or half-cycle in a symmetrical array of vessels allowing operation in either direction) is usually 3 to 8 minutes, with about one-fourth to one-half of the time devoted to the make period.

If regenerative heating of the blast air and steam is used, the thermal efficiency of the process may be as high as 85 percent (including the heat of combustion of liquid byproducts). Liquid byproducts constitute up to 50 weight percent of the feed oil. Recovery of these products requires considerable investment in plant and labor. Consequently, in peak load operation net byproduct credits are reduced not only because of this, but also because the irregular production adversely affects marketability.

High-Btu oil gases produced in cyclic processes contain substantial quantities of nitrogen and carbon dioxide formed during the blast purge part of the cycle. Furthermore, depending on condensing conditions, the aromatic content of raw oil gas can be as high as 5 volume percent. As a result, combustion characteristics of such

Table 4.—PYROLYSIS PROCESSES

Reactor Type	Continuous	Cyclic	Moving or Fluid Bed
Heat Source	Externally heated alloy tubes	Internally heated refractory	Circulating heated solids – coke, sand, etc.
Feedstocks			
C/H Weight Ratio	4.5-5.7	5.0-10	Same as Cyclic Reactor
Conradson Carbon Residue, wt %	0	0-18	
Distillation Range	Below 300°F	No limit	
Sulfur, wt %	No limit	No limit	
Types	Propane, butane, natural gasoline, light naphtha	All petroleum feeds from light naphtha to Bunker "C" fuel oil	
Process Conditions			
Temperature, °F	1300-1600	1300-1700	
Pressure, psig	Below 50 psig	Atmospheric	
Residence Time, sec	0.5-10	1-5	
Reactant Feeds			
Steam, lb/lb	Up to 1 (diluent only)	Up to 0.5 (diluent only)	
Heat of Combustion of Product Gas Due to Process Oil, %	75-90	35-85	
Products			
Gas			
Heating Value, Btu/SCF	1000-1400	900-1100	900-1400
Composition	CH_4, C_2H_6, C_2H_4, C_3H_6, H_2	CH_4, C_2H_6, C_2H_4, C_3H_6, H_2, N_2, CO_2	CH_4, C_2H_6, C_2H_4, C_3H_6, H_2
Other	Light and midboiling aromatics	Light aromatics, aromatic tar, coke,	Light aromatics, aromatic tar, coke
Commercial Processes (including related petrochemical processes)	Various processes for ethylene and propylene production	High-Btu Oil Gas Process (wide variety of equipment designs)	Lurgi-Ruhrgas Sandcracker (for ethylene and propylene)
Pilot Plant Processes	Several tube furnace pilot plants and industrial tests	Clean Regenerator Process (IGT)	Thermofor Pyrolytic Cracking Process (Surface Combustion Corp., Socony Mobil Oil Co.) Fluid Gasification Process (IGT)

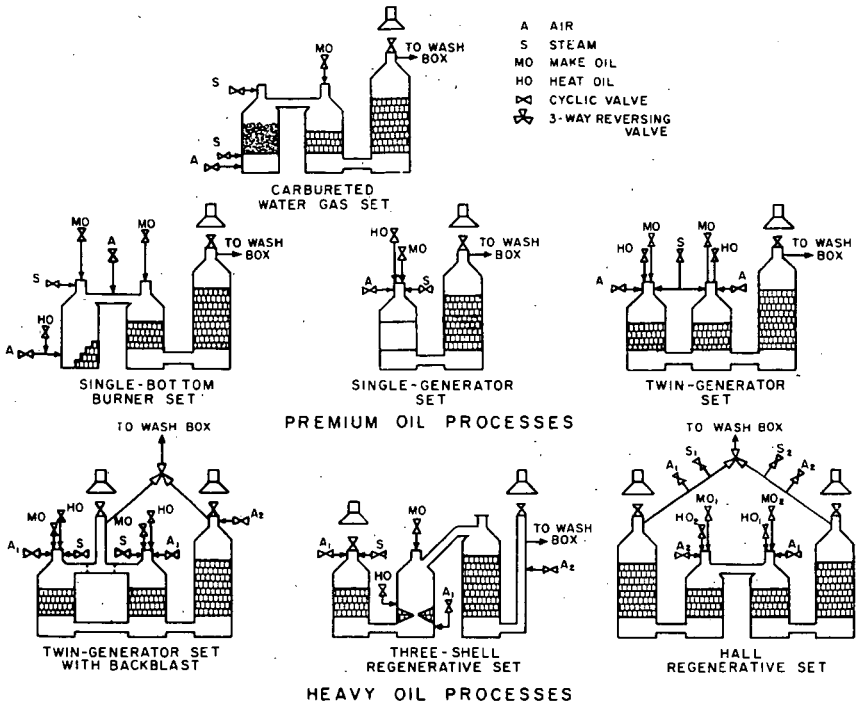

Figure 3.—BASIC CARBURETED WATER GAS SET (TOP), AND TYPICAL CONVERSIONS TO HIGH-BTU OIL GAS OPERATION

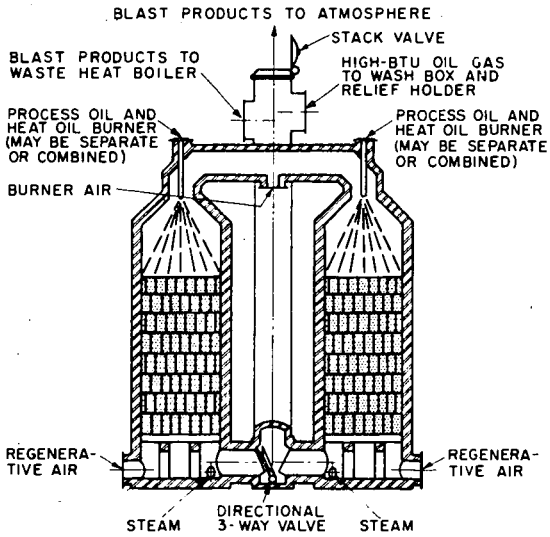

Figure 4.—HALL HIGH-BTU OIL GAS PROCESS TWO-SHELL SET (Gas Machinery Company)

high-Btu oil gases differ radically from those of natural gas, which normally has much lower specific gravity and consists primarily of the slow burning paraffins, methane and ethane. Oil gases tend to flash back because of their higher burning velocities, and to produce luminous flames because of their high content of unsatu rated hydrocarbons. Scrubbing with absorption oil to remove low molecular weig aromatics (light oil) reduces yellow-tipping. In general, high-Btu oil gases produced in conventional cyclic pyrolysis processes are not substituted for natural g in concentrations above 50 volume percent.

The major types of converted high-Btu oil gas sets which have been used a

1) The single-generator set consisting of two shells — the oil gas generator and the superheater;

2) The single, bottom burner-fired set consisting of three shells — the combus tion chamber, the oil gas generator, and the superheater;

3) The twin-generator set consisting of three shells — the two oil gas generato and a superheater,

   a) without backblast, and
   b) with backblast;

4) The three-shell regenerative set consisting of a regenerator, a generator, and a superheater; and

5) The Hall regenerative set, consisting of four shells — two generators and tw superheaters.

Schematic diagrams of representative examples of these various types of s conversion are shown in Fig. 3.

Single- and twin-generator units are primarily suited for operation with dis tillate oils. Twin-generator units, although requiring a more costly conversion, have substantially greater gas-making capacity and can be adapted to residual oil operation by addition of generator stacks and a backblast (Fig. 3) to remove carbor deposited in the generators. However, operation on Bunker "C" oil is not entirely satisfactory, and thermal efficiencies are relatively low because sensible heat is lost through the generator stacks, thereby increasing the heat oil requirements. Tl three-shell regenerative set design also appears to have limited flexibility in regar to feedstock quality.

In contrast, the Hall high-Btu oil gas process, which is completely regenera tive, has operated well at high thermal efficiencies on residual oils with 13 percent Conradson carbon residue, and has gained widest acceptance for winter base load operation with low-cost oils. Both new and converted units of the original four-she design, as well as newly constructed units of two-shell design (Fig. 4), were put int service in many locations and have been used to provide significant quantities of ba load, winter base load, or peak shaving gas. Typical operating data are given in Table 5. Many Hall high-Btu oil gas process designs in addition to that depicted in Fig. 4 are available such as those developed by the Koppers Company, the Semet-Solvay Division of Allied Chemical Corporation, Ibing/Ibeg, etc. A new set design with clean regenerators and capable of handling even the heaviest feedstock without smoke formation has been developed to a large pilot plant scale by the Institute of Gas Technology but has not yet found commercial use.

Successful high-Btu oil gas operation with low-grade residual oils was also achieved in partially and fully regenerative, upright "U", twin-shell Pacific Coast oil gas sets originally designed for low-Btu oil gas (town gas) production and byproduct lampblack recovery. The Pacific Coast oil gas process operates at much highe

Table 5.—TYPICAL HIGH-BTU OIL GAS PRODUCTION IN 21 MMCF/DAY CAPACITY HALL PROCESS PLANTS

Basis: 1000 Btu/SCF Heating Value After Light Oil Removal
(From Reference 5)

	3-12 ft O. D. Inverted "U" Sets	4-13 ft O. D. Inverted "U" Sets (one spare)	5-13 ft O. D. Inverted "U" Sets (one spare)
Number and Type of Sets			
Set Capacity, MCF/day	7000	7000	5250
Oil			
Type	Premium Distillate Oil	Reduced Crude Oil	Bunker "C" Fuel Oil
°API	37	20	12
Specific Weight, lb/gal	6.99	7.78	8.21
Carbon/Hydrogen Weight Ratio	6.4	7.1	8.0
Conradson Carbon Residue, wt%	0	6	12
Heating Value, Btu/gal	138,000	149,000	153,000
Process Requirements			
Make Oil, gal/MCF	11.2	11.9	14.0
Heat Oil, gal/MCF	1.4	1.0	0.45
Total Steam, lb/MCF	140	140	160
Power, kwh/MCF	2	2	3
Liquid Byproducts, gal/MCF	3.3	3.9	5.2

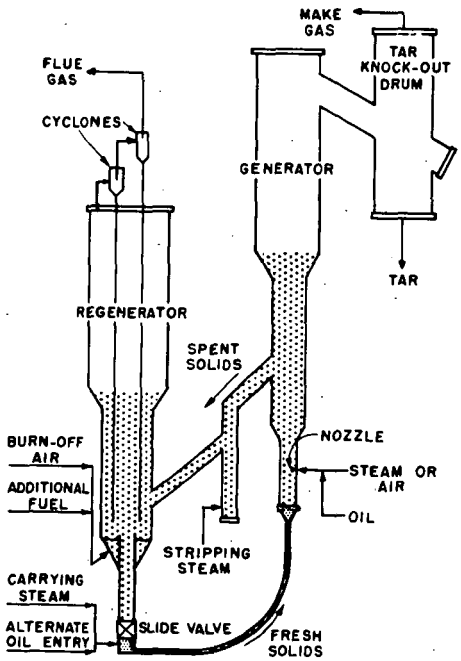

Figure 5.–SIMPLIFIED FLOW DIAGRAM OF FLUID-BED PILOT UNIT (From Reference 55)

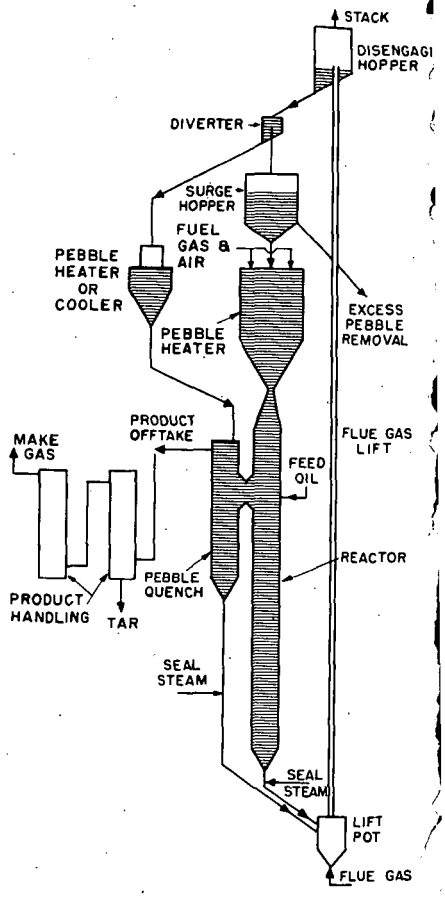

Figure 6.–FLOW DIAGRAM OF THERMOFOR PYROLYTIC CRACKING PILOT UNIT (Surface Combustion Corporation)

pyrolysis severities than the high-Btu oil gas process, which is responsible for the lampblack formation and the low product gas heating value. It is now obsolete in the U.S. However, three new Pacific Coast (Jones) type oil gas sets were built for town gas, tar and lampblack production in the U.K. after World War II and are operating satisfactorily on medium grade fuel oil.

Btu recoveries on a weight basis from Table 2 can be used directly to estimate relative set capacities as a function of oil properties where heat storage capacity is the limiting factor, on the assumption that the heat requirements for cracking a unit weight of oil do not vary significantly with C/H weight ratio.

A good approximation for coke or carbon deposition is given by the expression:

Wt % deposited coke = wt % Conradson carbon residue plus a constant

The value of the constant is usually taken as 3 weight percent, but must be increased when the true oil gas heating value falls below 1200 Btu/SCF, to account for greater coke formation and retention of pitch in the set. With the computed value for deposited coke, the yield of liquid products can be estimated from the total nongaseous product yields given in Table 2.

Heat oil requirements depend on the quantity of coke deposited, the efficiency of utilization of deposited carbon, and the efficiency of heat recovery from effluent process streams. Fully regenerative sets require substantially less heat oil than partially or nonregenerative sets. Heat oil requirements also decrease with increase in the size of the set. The heat oil required may be estimated by assuming an average heat requirement of 1800 Btu per pound of make oil, a thermal efficiency of utilizing heat oil and deposited coke of 60 percent, and a heat of combustion of deposited coke of 16,000 Btu per pound:

$$\text{Heat oil requirement, MBtu/MMBtu of make gas} = \frac{3000-(160)(\text{weight percent deposited coke})}{\text{Btu recovery, MBtu per pound of make oil}}$$

On the basis of this expression, at a total coke deposition of approximately 19 weight percent (a Conradson carbon residue of approximately 16 weight percent), no heat oil would be required in typical high-Btu operation.

Continuous Pyrolysis Processes

A. Fluid-Bed Cracking

Oil gas can be produced in fluid-bed pyrolysis units similar to the fluid catalytic cracking equipment used in the oil industry. As shown in the flow diagram, Fig. 5, oil is contacted with hot, finely divided solid particles (heat transfer medium) in a bed maintained in the fluidized state by an upward flow of steam and oil vapors. Pyrolysis on the surface of the hot solids yields the normal distribution of gaseous and nongaseous products, with coke being deposited on the solids. The vapor-phase pyrolysis products are withdrawn from the generator vessel overhead and passed through condensation and separation equipment. Coke-covered solids are continuously transferred from the reaction zone to a regenerator vessel located adjacent to the generator, where deposited coke and supplemental fuel are burned to reheat the solids for feed oil vaporization and pyrolysis. To complete the cycle, regenerated solids are returned to the generator to be contacted with fresh oil feed. Solids conveyance between the two vessels is accomplished pneumatically or by gravity, or by a combination of these methods.

The heat transfer medium used in one pilot plant process was 30-mesh silica gel, at circulation rates generally ranging from 5 to 20 pounds per pound of feed oil. Other materials which resist attrition, such as granular refractories, silica-alumina, and high-temperature coke breeze, are satisfactory, since unlike in the fluid processes used in refinery operations, the heat transfer solids are not depended upon for any catalytic effect at the elevated temperatures necessary for oil gasification.

Distillate and premium residual feedstocks can be utilized in the fluid-bed gasification process. The use of low-grade residual oils would require further development of the oil feed system to prevent agglomeration of heat transfer solids from excessive pitch and coke formation at the point of oil introduction.

Fluid-bed gasification has the advantages of continuous coke removal, and continuous production of high-Btu gas with no flue gas dilution. High pyrolysis severities can be achieved at relatively low temperature levels, since heat transfer is more rapid in a bed of hot fluidized solids than on cyclically heated stationary refractories. This permits the production of low specific gravity oil gases of greater substitutability for natural gas. The absence of cyclic temperature variations and large temperature gradients improves process control, and eliminates partial overcracking and undercracking typical of cyclic operation.

Operating results are equivalent to those presented in Table 3. Estimates of equipment costs indicate that only very large fluid bed units would offer any savings over conventional cyclic equipment. A full-scale plant based on an extensive pilot plant development by Farbenfabrik Bayer, AG, has been operated on naphtha at relatively mild pyrolysis severities for the production of ethylene, propylene and C_4 olefins and butadiene. The full-scale process is known as the Lurgi-Ruhrgas Sandcracker.

B. Thermofor Pyrolytic Cracking

High-temperature thermal cracking of residual oils in a moving bed of 1/4- to 3/4-inch diameter coke pebbles has been investigated by the Surface Combustion Corporation in a pilot plant (Fig. 6) of about one barrel per hour capacity. In this process, originally developed by the Socony Vacuum (now Mobil) Oil Company for a moving bed of refractory pebbles, oil is introduced into the bottom of a moving bed of hot coke pebbles, where pyrolysis takes place to produce oil gas and the usual byproducts. The pebbles flow downward through the reactor by gravity, while the oil vapors flow counter-currently upward at velocities too low to establish fluidization. Coke laid down during the pyrolysis step increases the weight of pebbles in the system. Coke is, therefore, continuously withdrawn from the system in the form of fines and oversize pebbles.

Pyrolysis products are withdrawn through a pebble quench which cools them to a temperature at which coke and pitch deposition problems are minimized. To provide for this pebble quench, a side stream of solids is diverted from the circulation system at the top of the pneumatic lift, which is the coolest point in the system. After passing through a heat exchanger where the temperature level is adjusted to 750°-800°F, the coke is contacted with the cracked products coming off the top of the reactor through a crossover section. After quenching the effluent product stream, the coke is combined with the stream of coke pebbles flowing from the bottom of the reactor.

Coke pebbles from the bottom of the reactor are transferred by means of a pneumatic lift to the pebble heater on top of the reactor. Gas is burned there to reheat the coke pebbles to 1400°-1650°F. Oil firing and coke burnoff may also be a practical means for reheating the pebbles. The hot coke flows back to the reactor by gravity to complete the cycle of this continuous gasification process. Oil gas and vaporized liquid products are prevented from circulating with the solids by steam seals.

The TPC process has the advantage of producing gases of good substitutability because of the severe pyrolysis conditions which can be maintained without byproduct handling difficulties, and because dilution with high specific gravity combustion gases can be minimized. The compositions of the product gases at equivalent true oil gas heating values correspond closely to those shown in Table 3. However, difficulties in designing a full-scale plant exist because feed oil is not readily distributed over the heat transfer medium, due to lack of turbulence. Heat transfer between the moving bed and the hydrocarbon vapor phase is better than in fixed refractory cyclic operation, but not as rapid as in fluid-bed operation.

The economics of the TPC process are highly dependent on byproduct credits. As a result of pitch removal during the pebble quench, the highly aromatic liquid products have a low viscosity and a very low free carbon content. The coke produced from low ash-content oils will meet the specifications for electrode-grade petroleum coke.

HYDROGENOLYSIS PROCESSES

The concept of producing high heating value fuel gases from hydrocarbon fuels by pressure hydrogenolysis was first proposed by the Institute of Gas Technology and the process designated as hydrogasification. Later, the British Gas Council also reported extensive work on the same concept, although employing a somewhat different approach. Hydrogasification involves pyrolysis in an environment rich in hydrogen and preferably at superatmospheric pressure to achieve the following advantages:

1) Total gas formation is increased by suppression of net hydrogen production from the hydrocarbon feed, even at atmospheric pressure, with attendant reduction of formation of nongaseous products, including coke and carbon.

2) The ratio of gaseous paraffins to olefins is increased, thereby increasing the substitutability of the product gas for natural gas.

3) Nearly complete conversion of low-boiling, low C/H ratio feedstocks to a high-methane content gas can be achieved by proper adjustment of hydrogen/oil feed ratio and reaction time in the usual reaction temperature range for pyrolysis and at relatively moderate pressures.

4) Processes can be designed for continuous operation with minimum byproduct formation for a wide range of hydrocarbon fuels.

In Table 6, the various hydrogenolysis processes are summarized. Except for the Gas Recycle Hydrogenation (GRH) process, none of the continuous processes have been commercialized, although interest is great in areas with a large supply of low-cost naphtha and a need for supplementing natural gas supplies. The oldest hydrogenolysis process is carburetion of water gas to increase its heating value to town gas specifications. In this cyclic process the make oil is introduced into the hot hydrogen-rich gas leaving the solid fuel bed (a mixture of hydrogen, carbon monoxide, and some carbon dioxide and undecomposed steam) at essentially atmospheric pressure. Even under these conditions, there is a substantially higher yield of gaseous hydrocarbons than in the equivalent cyclic high-Btu oil gas process in which there is no hydrogen-rich carrier gas present. A modification of the carbureted water gas process eliminating the need for solid fuel as a source of hydrogen-rich carrier gas developed to a large pilot plant scale by the Institute of Gas Technology but, again, this process has not been commercialized.

The nature of the various processes for continuous hydrogenolysis is best illustrated by Tables 7, 8, and 9 based on pilot plant operation with tubular empty reactors or with a circulating fluidized coke bed. In Table 7, operation with natural

Table 6.–HYDROGENOLYSIS PROCESSES

	Continuous (Empty)		Continuous (with fixed bed of medium to high activity nickel catalyst)	Cyclic (Fixed refractory and solid fuel beds)	Fluid Bed (Circulating Powdered Coke)
Reactor Type				Internally heated refractory and coke plus hot carrier gas	Exothermic heat of reaction plus reactant preheat
Heat Source	Exothermic heat of reaction plus reactant preheat		Reactant preheat		
Feedstocks					
C/H Weight Ratio	1.5-6.2	6.1-7.0	1.5-6.0	5.0-10.0	5.0-8.0
Conradson Carbon Residue, wt %	0	Below 0.1	0	0-18	0-12
Distillation Range	Below 550°F	Below 700°F	Below 420°F	No limit	No limit
Sulfur, wt %	No limit	No limit	0.0001	No limit	No limit
Types	Propane, butane, natural gasoline, light and heavy naphtha, kerosine, No. 1 fuel oil	Kerosine, No. 1 and No. 2 fuel oil, No. 1 and No. 2 diesel oil, premium gas oil and lower grade petroleum oils upgraded to the above specifications by prehydrogenation	Desulfurized propane, butane, natural gasoline, light and heavy naphtha	All petroleum feeds from light naphtha to Bunker "C" fuel oil	All petroleum feeds from light naphtha to better grades of Bunker "C" fuel oil
Process Conditions					
Temperature, °F	1300-1500	1300-1500	1250-1300	1300-1900	1100-1700
Pressure, psig	50-450	500-1500	300-450	Atmospheric-50	300-750
Residence Time, sec	5-15	50-350	5-10	Less than 60 sec	10-100
Reactant Feeds					
Hydrogen, SCF/lb	10-25 (or higher if desired for product gas dilution)	25-35	40-50 (as part of raw continuous catalytic steam reforming effluent)	5-20	20-70
Steam, lb/lb	–	–	1.5-2 (includes unreacted steam in catalytic reformer effluent)	Up to 1(diluent only)	–
Heat of Combustion of Product Gas Due to Process Oil, %	80-100	80-90	100	40-90	60-95
Products					
Gas					
Heating Value, Btu/SCF	800-900 (or lower with increased hydrogen dilution)	800-900	500	500-1000	500-1000
Composition	CH_4, C_2H_4, C_2H_6, H_2	CH_4, C_2H_6, H_2	CH_4, H_2, CO_2	CH_4, C_2H_4, C_2H_6, C_3H_6, H_2, plus CO, CO_2, N_2 dilution in carburetted water gas operation	CH_4, C_2H_6, H_2
Other	Light aromatics	Light aromatics	None	Light aromatics, aromatic tar, coke	Light aromatics, aromatic tar, coke
Commercial Processes (including related petrochemical processes)	Gas Recycle Hydrogenation Process (British Gas Council)	None	None	Carburetted Water Gas Process (Wide variety of equipment designs)	None
Pilot Plant Processes	Integral Pressure Hydrogasification Process (IGT)	High Pressure Hydrogasification Process (IGT)	I. C. I. Town Gas Process	Cyclic Pressure Hydrogasification Process (IGT)	Fluidized Bed Hydrogenator Process (British Gas Council)

Table 7.—SELECTED PROCESS DATA FROM PRESSURE GASIFICATION AND HYDROGASIFICATION OF DISTILLATE FEEDSTOCKS

	Pressure Gasification (From Ref. 22)		Pressure Hydrogasification (From Ref. 22)			Gas Recycle Hydrogenator (From Ref. 77)
Hydrocarbon Type	—26 RVP Natural Gasoline—			Heavy Naphtha	Kerosine	Light Naphtha
°API		88.7		61.1	43.1	69.5
C/H Weight Ratio		5.0		5.75	6.21	5.62
Distillation-End Point, °F		334		389	527	324
OPERATING CONDITIONS						
Average Temp, °F						
Reaction Mass	1393	1404	1322	1316	1316	1337
Reactor Tube Wall	1535	1591	1437	1438	1439	--
Reactor Pressure, psia	50.8	66.5	70.3	71.5	71.4	465
Residence Time, sec	5.20	3.64	4.64	4.29	3.95	--
Hydrocarbon Feed, gal/hr	47.55	91.81	49.36	47.83	45.10	88.9
Hydrogen Feed, SCF/gal[a]	--	--	60.31	87.33	104.26	113.0
OPERATING RESULTS						
Hydrogen Reacted						
SCF/gal	--	--	26.1	34.1	38.9	75.8
%	--	--	43.2	39.0	37.3	70.1
Product Gas Yield, SCF/gal	75.54	72.52	116.96	133.20	153.37	142.3
Btu Recovery, Net, MBtu/gal	89.44	92.68	107.76	103.79	111.17	100.8
Liquid Products, wt %[b]	24.2	21.3	--	18.2	20.0	12.2
Material Balance, %	102.0	101.5	101.1	100.6	100.5	--
Net Thermal Recovery, %[c]	79.8	82.6	96.7	87.0	86.4	88.1
PRODUCT GAS PROPERTIES						
Composition, mole %						
Hydrogen	13.8	11.9	29.3	40.0	42.6	22.6
Methane	56.3	56.5	43.0	34.3	30.3	49.5
Ethane	8.1	8.1	10.7	11.5	12.5	21.2
Propane	0.2	0.1	0.3	0.4	0.8	1.3
Butanes	0.1	0.2	0.3	0.1	0.1	
Pentanes-plus	--	--	0.2	--	--	
Ethylene	17.0	15.8	10.6	8.7	7.8	
Propylene	1.6	3.5	2.5	1.6	2.5	
Butenes	0.4	0.2	0.3	0.5	0.6	
Pentenes	--	0.1	0.1	--	0.1	
1,3-Butadiene	0.4	0.8	0.1	0.2	0.2	
Cyclopentadiene	0.1	0.2	0.1	0.1	0.1	
Acetylene	--	0.5	0.2	0.2	0.2	
Benzene	1.8	0.5	1.2	1.5	1.0	
Toluene	0.2	0.2	0.3	0.3	0.2	
Carbon Dioxide	Trace	0.1	0.2	Trace	Trace	1.8
Nitrogen	--	1.3	0.6	0.6	1.0	0.9
Carbon Monoxide	--	--	--	--	--	2.7
Total	100.0	100.0	100.0	100.0	100.0	100.0
Heating Value, Btu/SCF						
As Made	1184	1278	1089	992	951	962
Calculated	1187	1196	1060	973	961	
Specific Gravity, Air = 1						
As Made	0.72	0.77	0.64	0.54	0.51	0.58
Calculated	0.67	0.68	0.59	0.53	0.52	

a Essentially 100% pure

b Weight percent of Hydrocarbon Feed

c $100\left[\frac{\text{Ht of combust of prod. gas} - \text{Ht of combust of feed } H_2}{\text{Heat of combustion of feed oil}}\right]$

Table 8.—TYPICAL HYDROGASIFICATION TESTS OF DISTILLATE AND UPGRADED CRUDE OILS
(From Reference 85)

Feed Oil	Kerosine[d]	Diesel[e] Oil	0°-360°C Fraction[f] Prehydrogenated Taparito Crude
Oil Rate			
lb C/hr	3.06	1.50	1.50
lb oil/cu ft reactor-hr	24.7	12.1	12.1
Hydrogen Feed Ratio, % of stoichiometric[a]	98.0	99.9	100.3
Pressure, psig	500	1500	1500
Temperature, °F			
Average[b]	1325	1335	1305
Maximum	1400	1395	1395
Residence Time, sec[c]	51.0	301	319
Hydrogen Consumption, SCF/gal oil	109	156	158
Product Recovery, wt % of oil + H_2 fed	103.5	101.7	97.2
Product Distribution, wt %			
Gas	88.9	93.2	91.0
Liquid	11.1	6.8	9.0
Solid Residue	nil	nil	nil
Product Gas Yield,			
SCF/gal oil	198	211	205
SCF/cu ft reactor-hr	726.9	362.8	354.2
Net Thermal Recovery, %	90.4	88.9	80.1
Product Gas Properties			
Composition, mole %			
$N_2 + CO + CO_2$	0.8	0.4	0.4
H_2	38.8	23.8	27.2
CH_4	40.5	69.7	66.2
C_2H_6	17.1	5.3	5.4
Higher Paraffins	0.5	--	0.1
Olefins	1.0	0.1	--
Benzene + Toluene	1.3	0.7	0.7
Total	100.0	100.0	100.0
Heating Value, Btu/SCF	909	893	868
Specific Gravity (air = 1)	0.495	0.482	0.466

a Stoichiometric for complete conversion of C H in feed oil to CH_4

b Based on average of temperatures measured at centers of three equal zones

c Based on dry product gas volume at reactor pressure and average temperature

d 44.2°API, C/H 6.11, 0.0% CCR

e 37.3°API, C/H = 6.39, 0.0% CCR

f 36.5°API, C/H = 6.63, 0.0% CCR

Table 9.—HYDROGASIFICATION OF PETROLEUM OILS OVER FLUIDIZED COKE
(From References 70 and 77)

Feed Oil	Gas Oil[c]	Crude Oil[d]	Crude Oil[e]	Heavy Fuel Oil[f]
Oil Rate				
lb C/hr	122	132	1110	101
lb oil/cu ft reactor-hr	18.7	25.2	25.6	19.3
Hydrogen Feed Ratio, % of stoichiometric[a]	207	163	83	210
Pressure, psig	470	470	725	470
Temperature, °F	1436	1409-1454	1382	1391-1445
Hydrogen Consumption, SCF/U.S. gal oil[b]	119	116	111	127
Conversion, wt % C in feed				
Gas	80.7	75.5	80.5	65.8
Liquid	19.3	22.1	25.7	29.2
Benzene	12.9	10.0	11.5	9.5
Naphthalene	4.3	2.8	3.9	6.4
Higher Aromatics	2.4	9.3	10.3	13.3
Solid Residue	0.0	2.4	2.4	5.0
Product Gas Yield,				
SCF/U.S. gal oil[b]	435	357	205	543
SCF/cu ft reactor-hr[b]	1175	1256	731	1314
Net Thermal Recovery, %	78.4	72.0	71.5	63.5
Product Gas Properties				
Composition, mole %				
$N_2 + CO + CO_2 + H_2S$	3.20	3.15	7.5	2.15
H_2	68.0	64.2	35.6	75.15
Paraffins ($C_n H_{2n+2}$)	28.8	32.4	56.9	22.6
Unsaturates	0.0	0.25	--	0.1
Heating Value, Btu/SCF[b]	559	597	792	499
"n" in $C_n H_{2n+2}$	1.25	1.25	1.24	1.17

[a] Stoichiometric for complete conversion of C+ H in feed oil to CH_4

[b] SCF undefined

[c] 38.6°API, C/H = 6.46, 0.0% CCR

[d] 33.2°API, C/H = 6.85, 5% CCR

[e] 32.7°API, C/H = 6.84, 3.5% CCR

[f] 16.4°API, C/H = 7.59, 11.0% CCR

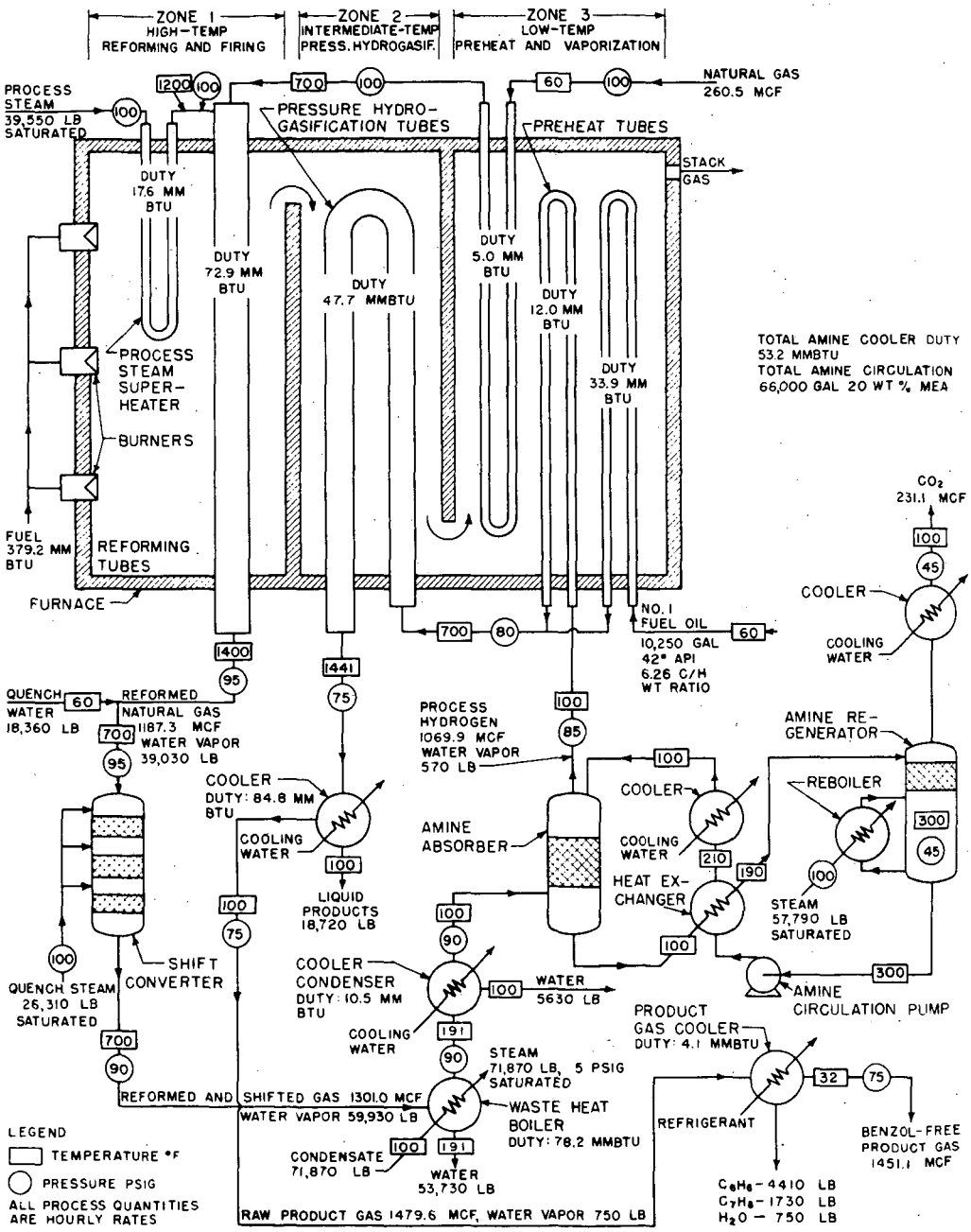

Figure 7.—PRODUCTION OF 1000 MMBTU/HR OF NATURAL GAS SUPPLEMENTS FROM NO. 1 FUEL OIL BY IGT INTEGRAL PRESSURE HYDROGASIFICATION PROCESS

gasoline, with and without hydrogen, is first compared to illustrate the tremendous effect of hydrogen addition at pressures of only 50 to 60 psig on this low C/H ratio and low-boiling feedstock. Liquid products of over 20 weight percent of the feedstock are completely eliminated by addition of 60 SCF/gal of hydrogen at 4 to 5 seconds residence time, and gaseous olefins greatly reduced. With heavy naphtha and kerosene at 50 to 60 psig pressure and a residence time of about 4 seconds, about 20 weight percent of liquid products are formed at 90-100 SCF/gal hydrogen addition, but they are valuable low-boiling aromatics. At 450 psig and with 113 SCF/gal of hydrogen, gas quality is further improved and liquid products are reduced by about half. IGT and Gas Council pilot plant data for the light and heavy naphtha-type feedstocks are essentially the same at the same pressure.

In IGT hydrogasification pilot plant operation at pressures of 500 to 1500 psig, with feedstocks of up to 6.6 C/H weight ratio and negligible Conradson carbon residue (Table 8), liquid products were on the order of 10 weight percent, again mostly low-boiling aromatics. This was accomplished at residence times of 50 to 300 seconds and sufficiently high hydrogen to oil feed ratios to meet the stoichiometric requirements for complete conversion of the feedstock to methane, while still maintaining product gas heating values of nearly 900 Btu/SCF. In the Gas Council fluidized coke bed hydrogenation pilot plant, operation with feedstocks up to 7.6 C/H weight ratio and 11 percent Conradson carbon residue was feasible (Table 9).

The basic problem in commercialization of all of these hydrogasification processes is an economic source of hydrogen supply. When the IGT integral pressure hydrogasification process was developed, the catalyst improvements necessary to efficiently convert the lower boiling liquid feedstocks to hydrogen by catalytic steam reforming at superatmospheric pressure had not yet been achieved, so that the only practical source of high-pressure hydrogen in a self-sufficient plant was by catalytic steam reforming of a portion of purified product (recycle) gas. Such a scheme is shown in Fig. 7.

After Imperial Chemical Industries (I.C.I.) developed its steam-naphtha reforming process, this became a preferred source of hydrogen supply for any continuous hydrogasification process for light distillates, and this is the hydrogen source used for the British Gas Council's GRH process, as shown in Fig. 8. A variant of this process has recently been announced by I.C.I. in which the hydrogasification step is not carried out in an empty reactor but in presence of a nickel catalyst; the hydrogen supply is, of course, the I.C.I. steam-naphtha reforming process. The flow sheet for this approach is given in Fig. 9.

Finally, the IGT high-pressure hydrogasification process, which is designed to utilize high-boiling materials such as crude oils, approaches the problem of hydrogen supply either by reforming of recycled product gas, or by partial oxidation of a portion of the feed oil. These schemes are shown in Fig. 10. It should be noted that, in this process, the feedstock cannot be fed directly to the reactor but must be prehydrogenated (hydrocracked) over cobalt molybdate catalyst, the remaining high-boiling materials must be separated, and the distillate fraction, which is equivalent to No. 2 diesel oil, fed into the hydrogasification reactor. In the British Gas Council version of the hydrogasification process for high-boiling, high C/H weight ratio feedstocks this is, of course, not necessary since the fluidized coke bed serves to remove the pitch and coke from the reactor.

In view of the advanced state of commercialization of the GRH process combined with the I.C.I. steam-naphtha reforming process (Fig. 8), it should be described in more detail. Light or heavy naphtha is first vaporized, mixed with some recycled hydrogen and desulfurized to less than 1 ppm of residual sulfur at a temperature of about 750°F using a hydrodesulfurization catalyst (nickel molybdate) followed by Luxmasse (alkaline iron oxide) and/or zinc oxide. The latter materials absorb the hydrogen sulfide formed in the hydrodesulfurizer and must be discharged and replaced when they are spent. About 58 percent of the naphtha vapor is diverted

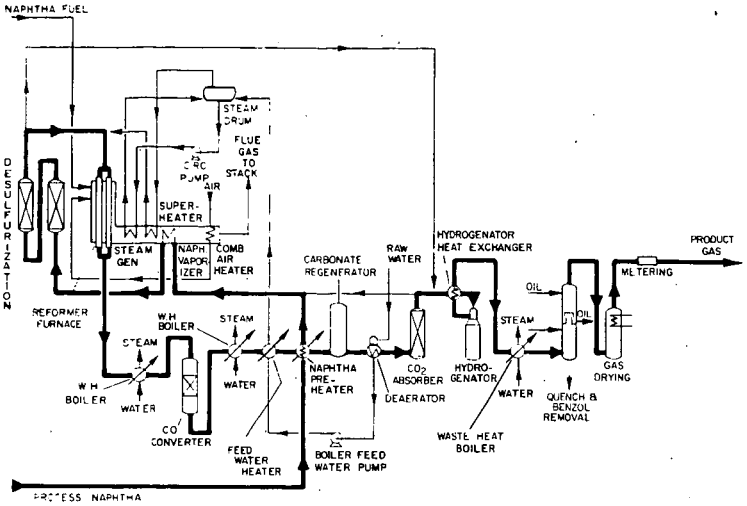

Figure 8.—SIMPLIFIED FLOW DIAGRAM OF I.C.I. NAPHTHA REFORMING-GAS RECYCLE HYDROGENATION PLANT

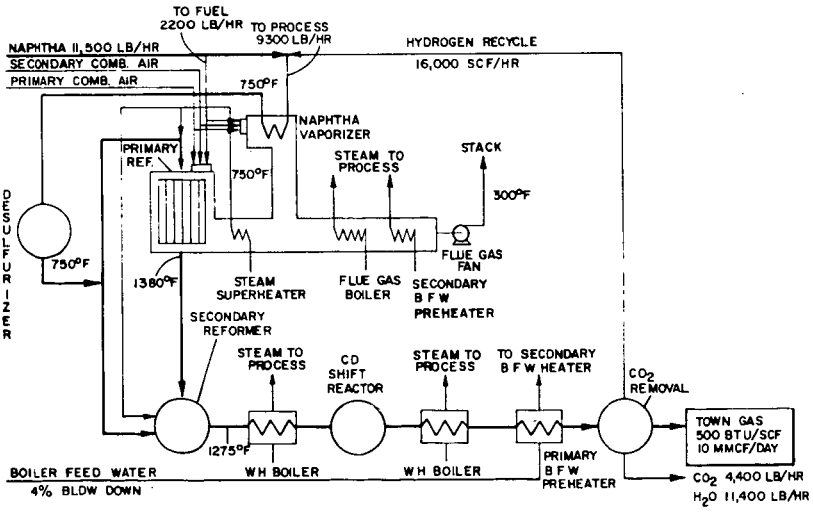

Overall thermal efficiency		93.5%
Feedstock		224,000 lb/day
Fuel		52,000 lb/day
Softened boiler feed water		531,000 lb/day
Power (air cooling assumed)		3200 KWH
CATALYST CHARGE		
Hydrodesulfurizer	(ICI catalyst 32-4):	dependent on sulfur level in naphtha
	(ICI catalyst 41-3)	270 CF
Reformers	(ICI catalysts 46-1 and 53-1) (total)	170 CF
Shift reactor	(ICI catalyst 15-4)	80 CF

Figure 9.—I.C.I. TOWN GAS PROCESS

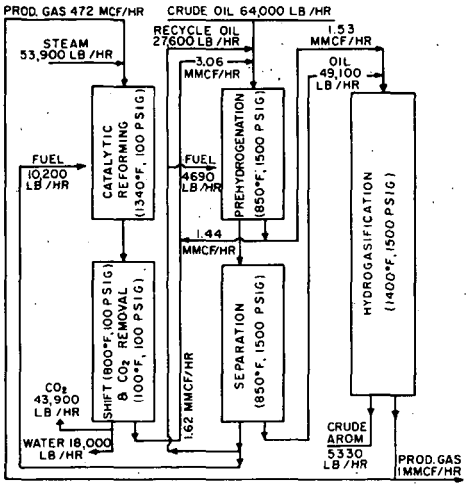

IN	lb/hr	OUT	lb/hr
Oil	64,000	Product Gas	35,000
Steam	53,900	CO_2	43,900
		Crude Aromatics	5,330
		Oil for Reformer Fuel	10,200
		Oil for Prehydrog. Preheat	4,700
		Water	18,000
		Loss	770
	117,900		117,900

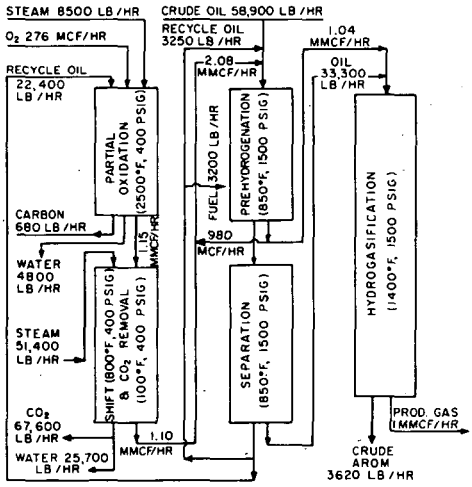

IN	lb/hr	OUT	lb/hr
Oil	58,900	Product Gas	35,000
O_2	22,900	CO_2	67,600
Steam to Partial Oxidation	8,500	Crude Aromatics	3,620
Steam to Shift	51,400	Carbon from Partial Oxidation	680
		Water from Partial Oxidation	4,800
		Water from Shift	25,700
		Oil for Prehydrog. Preheat	3,200
		Loss	1,100
	141,700		141,700

Figure 10.—TWO FORMS OF IGT HIGH-PRESSURE HYDROGASIFICATION PROCESS

to the hydrogenator plant while the remainder is mixed with superheated steam in the ratio of about 4 lb steam per lb naphtha. This mixture passes to the tubular I.C.I. process reforming furnace where it is converted to hydrogen, carbon monoxide, methane and carbon dioxide. The gases leaving the tubes are normally at a temperature of about 1380°F, at pressures of up to 400 psig. They are first cooled in a waste heat boiler to about 660°F which is a convenient temperature for catalytic carbon monoxide conversion. This is carried out in a single stage with a conventional chromia-promoted iron oxide catalyst since sufficient undecomposed steam remains to give a reduction of carbon monoxide from 10 percent to 3 percent. More heat is recovered in a secondary waste heat boiler and this is followed by feedstock and water preheating and reduction of carbon dioxide content to 1.5 percent in an activated hot potassium carbonate absorption system. At this point, the lean gas has a heating value of about 435 Btu/SCF and contains some 78 percent hydrogen.

The reforming furnace is fired with liquid naphtha and heat is recovered from the flue gases in a steam superheater, boiler, naphtha vaporizer and combustion air preheater.

The lean gas from carbon dioxide removal is blended with naphtha vapor and enrichment takes place in the GRH unit. The product rich gas, after serving to preheat the reactants in an exchanger, passes through a waste heat boiler to a quench tower where it is cooled and heavier hydrocarbons condense. The gas remains saturated with benzene and this is then removed in a standard oil scrubbing process.

This process combination has already formed the basis for the considerable number of commercial plants which are in operation or under construction. They are all designed to produce town gas with a heating value of about 500 Btu/SCF. This has no significant effect on the design of the hydrogenator since in these plants a portion of the lean reformed gas bypasses the hydrogenator and is mixed again with the enriched stream after benzol has been removed. A higher proportion of carbon dioxide is also returned in the bypassed gas since this is required as a diluent for specific gravity control in the final gas mixture. The maximum heating value obtained in commercial operation so far has been 800 Btu/SCF at 92 percent overall thermal efficiency. However, as noted in the discussion of various pilot plant data, higher heating values can be achieved by the proper combination of pressure, residence time and hydrogen to oil feed ratio.

CATALYTIC STEAM REFORMING OR CRACKING PROCESSES

These processes involve the reactions of hydrocarbons with steam in the presence of a catalyst — normally nickel containing — at temperatures of 800° to 1900°F. Carbon monoxide and hydrogen are formed as the dominant products at temperatures of 1200° to 1900°F:

$$C_nH_m + nH_2O \rightarrow nCO + (n + \frac{m}{2})\ H_2$$

These reactions are highly endothermic (heat consuming) so that the question of heat supply is an important consideration in process design. It is accomplished in three ways: 1) heat is supplied continuously from an external source through alloy steel tubes containing the catalyst; 2) heat is supplied cyclical by storage in the catalyst bed and refractory shapes; 3) heat is supplied by partial combustion through addition of air to the steam-hydrocarbon feed. Air addition is used both to supply all of the heat requirements not met by reactant preheat, or as a partial source of heat in both externally heated tube furnaces or cyclic operation.

At temperatures of 800° to 1000°F, methane, carbon dioxide and hydrogen are the major products. For example, with butane:

$$C_4H_{10} + 2H_2O \rightarrow 3CH_4 + CO_2 + H_2$$

Table 10.—CATALYTIC STEAM REFORMING OR CRACKING PROCESSES

Reactor Type	Continuous (with fixed bed of high activity nickel catalyst)	Continuous (with fixed bed of medium to high activity nickel catalyst)	Continuous (with fixed bed of low activity nickel catalyst)
Heat Source	Reactant preheat	Externally heated alloy tubes	Partial combustion and reactant preheat
Feedstocks			
C/H Weight Ratio	4.5-6.0	4.5-6.0	4.5-5.7
Conradson Carbon Residue, wt %	0	0	0
Distillation Range	Below 420°F	Below 420°F	Below 300°F
Sulfur, wt %	Below 0.0001	Without air at high pressure Below 0.0001 With air at low pressure Below 0.1	Below 0.1
Types	Desulfurized propane, butane, natural gasoline, light and heavy naphtha	Propane, butane, natural gasoline, light and heavy naphtha	Propane, butane, natural gasoline, light naphtha
Process Conditions			
Temperature, °F	800-1000	1200-1900	1400-1600
Pressure, psig	250-400	Atmospheric-450	Atmospheric
Residence Time, sec	0.5-15	0.2-10	Below 1
Reactant Feeds			
Steam, lb/lb	1-3	2-6	0.7-2
Air, SCF/lb	–	0-20	50-75
Heat of Combustion in Product Gas Due to Process Oil, %	100-110	110-120	90
Products			
Gas			
Heating Value, Btu/SCF	600-800	250-350	150-200
Composition	CH_4, H_2, CO_2	H_2, CO, CO_2, CH_4, N_2	H_2, CO, CO_2, N_2, CH_4
Other	None	None	None
Commercial Processes (including related petrochemical processes	Catalytic Rich Gas Process (British Gas Council)	Girdler Co. Process, I. C. I. Process, Surface Combustion Co. Process, Hercules Powder Co. Process, Otto Process, Klönne Process, M. W. Kellogg Co. Process, plus many others	Continuous O. N. I. A.-G. E. G. I. Process, Compagnie Générale de Construction de Fours-Distrigaz Process, Grande Paroisse Air Cracking Process, Gaz de France P-2 Process
Pilot Plant Processes	Low Temperature Steam Reforming (IGT)		

Table 10, Cont.—CATALYTIC STEAM REFORMING OR CRACKING PROCESSES

Reactor Type	Cyclic (with fixed bed of low activity nickel catalyst)	Cyclic (with fixed bed of low activity nickel catalyst)	Cyclic (with fixed bed of low activity nickel catalyst)
Heat Source	Internally heated catalyst and refractory	Internally heated catalyst and refractory	Internally heated catalyst, partial combustion and reactant preheat
Feedstocks			
C/H Weight Ratio	4.5-8.0	4.5-8.0	4.5-6.0
Conradson Carbon Residue, wt %	0-12	0-12	0
Distillation Range	No limit	No limit	Below 420°F
Sulfur, wt %	No limit	No limit	No limit
Types	All petroleum feeds from propane to better grades of Bunker "C" fuel oil	All petroleum feeds from propane to better grades of Bunker "C" fuel oil	Propane, butane, natural gasoline, light and heavy naphtha
Process Conditions			
Temperature, °F	1300-1800	1300-1800	1300-1800
Pressure, psig	Atmospheric	Atmospheric	Atmospheric
Residence Time, sec	0.2-1	0.2-1	Below 1
Reactant Feeds			
Steam, lb/lb	1-3	1-3	1-3
Air, SCF/lb	–	–	5-15
Heat of Combustion in Product Gas Due to Process Oil, %	60-110	60-110	90-100
Products			
Gas			
Heating Value, Btu/SCF	300-1000	300-1000	300-500
Composition	CH_4, C_2H_6, C_2H_4, C_3H_6, H_2, CO, CO_2, N_2	CH_4, C_2H_6, C_2H_4, C_3H_6, H_2, CO, CO_2, N_2	CH_4, C_2H_4, H_2, CO, CO_2, N_2
Other	Light aromatics, aromatic tar, coke	Light aromatics, aromatic tar, coke	None
Commercial Processes (including related petrochemical processes	Cyclic O. N. I. A.-G. E. G. I. Process, Segas Process, U. G. I.-CCR Process, plus others	Cyclic O. N. I. A.-G. E. G. I Process, Segas Process, U. G. I.-CCR Process, plus others	Micro-Simplex (MS) or Stein et Roubaix Process, S. S. C./O. G. I. and O. G. 2 Processes, Otto-CC3P Process, Gaz de France P-9 Process, Silamit Indugas P-3 Process, Cyclic Catalytic Koppers Process

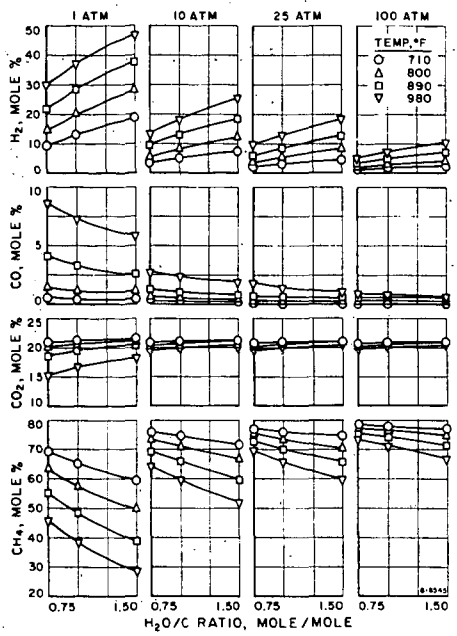

Figure 11.–IDEAL GAS EQUILIBRIUM COMPOSITIONS (WATER-FREE) FOR LOW-TEMPERATURE STEAM REFORMING OF n-HEXANE

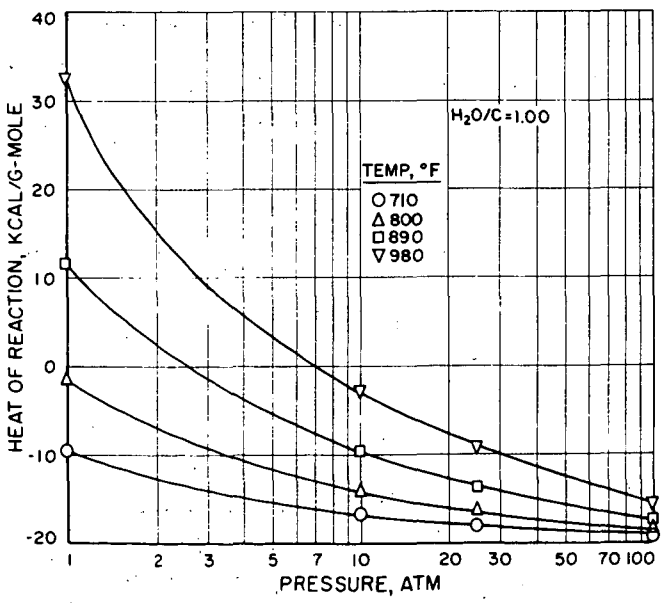

Figure 12.–EFFECT OF PRESSURE ON EQUILIBRIUM HEATS OF REACTION FOR LOW-TEMPERATURE STEAM REFORMING OF n-HEXANE

This overall reaction is essentially thermally neutral after preheat of the reactants to near the reaction temperature and, therefore, not limited by heat transfer rates.

A basic problem in catalytic steam reforming and cracking is that the pyrolysis reactions discussed in the preceding section compete with the steam-hydrocarbon reactions. Thus, the higher the C/H ratio, the higher the boiling range and the higher the Conradson carbon residue value, the more difficult it becomes to convert the feedstock by reaction with steam because of its increased tendency to undergo pyrolysis side reactions leading to olefinic gaseous products, aromatic liquid products and coke. This can be counteracted only to a limited extent by use of excess steam and the addition of air. High molecular weight liquid products (tar and pitch), and coke, in addition to reducing gas yield and choking the reactor, also deactivate the catalyst above and beyond deactivation by sulfur poisoning. Another problem is mineral contaminants in the feedstock which generally act as catalyst poisons.

In Table 10 are summarized the various processes developed to handle the problems of heat supply and feedstock properties in catalytic steam reforming or cracking. The term reforming is normally applied to conversion of one gas to another, whereas cracking refers to conversion of a liquid feedstock to gas. All of the processes are in extensive commercial use, many on a worldwide basis. In fact, the vast majority of new manufactured gas plant construction falls within the general category of catalytic steam reforming or cracking. Inasmuch as this presentation is concerned with gasification of petroleum, catalytic steam reforming of natural gas and refinery gas is not included. However, processes for these feeds are essentially the same as those for propane and butane.

Continuous Low-Temperature Steam Reforming or Cracking

This process involves the reaction of vaporized, desulfurized low-boiling feedstocks, ranging from propane through heavy naphtha, with 1 to 3 lb of steam per lb of hydrocarbon at superatmospheric pressure, preferably 250 to 400 psig, and at temperatures of 800° to 1000°F. A very active nickel catalyst is required. An alkali promoted, coprecipitated nickel-alumina catalyst is used in the British Gas Council process (the Catalytic Rich Gas, or CRG process) and a skeletal nickel-alumina-aluminum catalyst is used in the IGT process. The 600 to 800 Btu/SCF product gases, consisting of more than 50 percent methane and lesser amounts of hydrogen and carbon dioxide, can be upgraded to 800 to 900 Btu/SCF by carbon dioxide removal. No byproducts are formed. Some of the process fundamentals are shown in Figs. 11 and 12 for an idealized feedstock – normal hexane. The assumed reaction scheme, closely approached in practice, is:

$$C_6H_{14} + 6H_2O \rightarrow 6CO + 13H_2 \text{ (to completion)}$$

$$2CO + 2H_2 \rightleftharpoons CH_4 + CO_2 \text{ (in chemical equilibrium)}$$

$$CO + H_2O \rightleftharpoons CO_2 + H_2 \text{ (in chemical equilibrium)}$$

From Fig. 11, it can be seen that increases in pressure, decreases in steam-to-carbon feed ratio, and decreases in temperature all increase methane concentrations and decrease hydrogen and carbon monoxide concentrations, with relatively little effect on carbon dioxide concentrations. Fig. 12 shows that within the range of preferred operating conditions, the heat of reaction changes from moderately endothermic to moderately exothermic. Generally, the same conditions that increase methane formation also increase the tendency toward exothermicity, including decreases in feedstock C/H ratio.

In practice, minimum reaction temperatures are set by feedstock reactivity and catalyst activity; for example, operation with propane at temperatures as low as 750°F has been found feasible. Minimum steam-to-hydrocarbon feed ratios are de-

termined by the requirement to prevent the formation of coke or other high molecular weight byproducts on the catalyst.

Conversion rates are extremely fast and, as noted before, not significantly limited by heat transfer considerations with the proper adjustment of reactant ratios, preheat, and operating temperatures and pressures. As shown in Table 11, with the IGT catalyst, space-time yields of 10,000 to 20,000 SCF/CF catalyst-hr are readily attainable, about ten times those typical in high-temperature steam reforming and cracking.

Continuous High-Temperature Steam or Steam-Air Reforming or Cracking

Two basic process types exist here, neither capable of producing utility gas directly because the heating values are too low: 1) reforming or cracking in externally heated alloy tubes with steam, or steam and relatively little air, at pressure levels up to the limits of tube design (normally 450 psig), and 2) reforming or cracking at atmospheric pressure with steam and sufficient air to make the operation autothermic. Both types are limited to naphtha or lower boiling feedstocks and are widely commercialized (Table 10).

Nickel catalysts of substantially lower activity than required in low-temperature steam reforming are used, although with the advent of high-pressure alloy tube furnace operation, catalysts of increasing activity are being developed to allow lowering of reaction temperatures. The I.C.I. steam-naphtha cracking process described in the section on hydrogenolysis processes (Fig. 9), also depends on an improved, more active catalyst to successfully handle the difficult problem of high-pressure operation with a nongaseous feedstock.

The tube furnace process, utilizing either natural gas, where available, or naphtha, if of sufficiently low cost, is a major source of ammonia synthesis gas (3/4 hydrogen and 1/4 nitrogen). In this application, in addition to the steam reaction section, a secondary air reformer is generally used to convert most of the already low methane content to hydrogen and carbon oxides, and to enrich the gas with nitrogen. Carbon monoxide is then catalytically converted to additional carbon dioxide and hydrogen and the carbon dioxide removed by one of the regenerative scrubbing processes.

Many modern town (450 to 550 Btu/SCF) gas plants in areas with economical supplies of propane, butane, and natural or refinery gas, or of naphtha and one of the above high heating value gases, utilize pressure tube furnace plants to produce about 300 Btu/SCF carrier gas and then add high heating value gas (cold enrich) to the desired level. To optimize this type of operation requires close matching of the combustion characteristics of the product gas with those of the base gas (normally derived from one of the coal gasification processes) while maintaining the lowest possible operating cost. In case of complete replacement of gases produced by obsolete coal gasification processes, the problem is still essentially the same, if costly appliance burner adjustment or conversion is to be kept at a minimum.

This is the broad area of gas interchangeability (also exchangeability or substitutability) already referred to in the section on pyrolysis as related to substitution of high-Btu oil gas for natural gas. In the context of gas manufacture, the rules for interchangeability control are generally:

1) If technically and economically feasible, attempt to duplicate the composition of the base or burner adjustment gas.

2) If complete composition matching is not feasible, attempt to roughly match heating value, specific gravity and flame speed.

Table 11. -LOW-TEMPERATURE STEAM REFORMING OF HYDROCARBONS WITH SKELETAL NICKEL CATALYST
(Institute of Gas Technology)

	Propane	Hexane	Light Naphtha	Light Kerosine
FEED PROPERTIES				
°API	--	--	70.3	48.8
Distillation Range, °F	--	--	167–203	361–445
C/H Weight Ratio	4.47	5.11	5.42	5.85
OPERATING CONDITIONS				
Pressure, psig	355	375	355	375
Reaction Temperature, °F	710	839	935	846
Steam/Hydrocarbon Weight Ratio	2.59	1.84	2.16	2.34
Hydrocarbon Space Velocity, lb/CF catalyst-hr	684	512	328	231
OPERATING RESULTS				
Product Gas Composition, mole %				
N_2	--	0.4	--	0.1
CO	--	trace	0.2	0.5
CO_2	18.8	20.8	21.5	24.5
H_2	10.6	10.5	12.1	21.3
CH_4	70.6	68.3	66.2	53.6
C_6+	--	--	--	trace
Total	100.0	100.0	100.0	100.0
Product Gas Specific Gravity, (air = 1.00)	0.685	0.706	0.705	0.690
Product Gas Heating Value, Btu/SCF	737	714	699	604
Product Gas Yield, SCF/lb	27.9	30.2	31.2	35.3
Product Gas Space-Time Yield, SCF/CF catalyst-hr	19,100	15,470	10,230	8,140
Material Balance, wt %	106	102	101	102
Heat of Combustion Recovery, %, *	95	104	101	99
SCRUBBED GAS PROPERTIES**				
Composition, mole %				
N_2	--	0.5	--	0.1
CO	--	trace	0.2	0.6
CO_2	2.0	2.0	2.0	2.0
H_2	12.9	13.0	15.1	27.7
CH_4	85.1	84.5	82.7	69.6
C_6	--	--	--	trace
Total	100.0	100.0	100.0	100.0
Specific Gravity (air=1.00)	0.511	0.514	0.508	0.442
Heating Value, Btu/SCF	889	883	883	783

* $100\left[\frac{\text{Heat of combustion of product gas}}{\text{Heat of combustion of feed hydrocarbon}}\right]$

** Calculated composition assumes 2 mole percent CO_2 present in scrubbed product gas

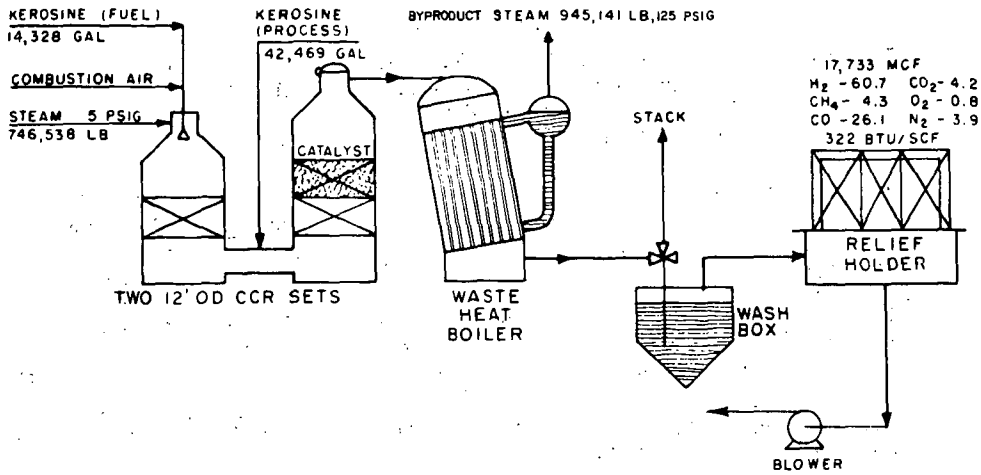

Figure 13.—TYPICAL U.G.I. CCR PLANT OPERATING ON KEROSINE FEEDSTOCK

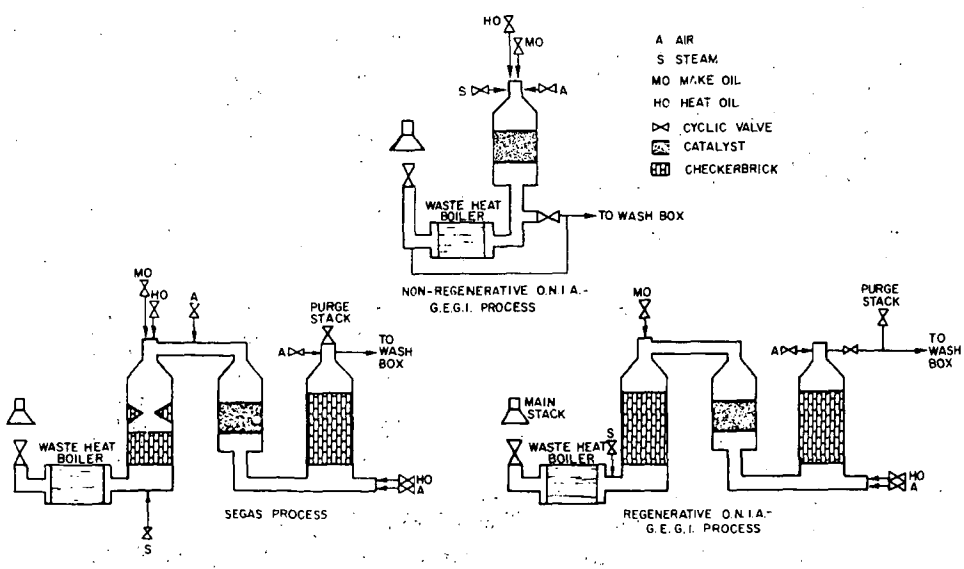

Figure 14.—TYPICAL CONFIGURATIONS OF O.N.I.A.—G.E.G.I. AND SEGAS CYCLIC CATALYTIC STEAM CRACKING OR REFORMING PLANTS

3) If this still is not feasible, maintain the closest possible match of Wobbe index (heating value in Btu/SCF divided by the square root of the specific gravity relative to air) and flame speed.

The Wobbe index is designed for application to atmospheric gas burners, the most commonly used type, in which the primary combustion air is inspirated by the kinetic energy of a fuel gas jet emanating from a small orifice. In such burners, the total heat input or burner port loading is roughly proportional to the Wobbe index of the fuel gas, and the primary aeration is inversely proportional. Together with the gas composition, the Wobbe index thus largely determines the flame stability: flashback due to high flame speed and/or low port loading and high primary aeration; blow-off due to low flame speed and/or high port loading; luminous and soot-producing flames due to a high content of hydrocarbons, particularly of higher molecular weight and of nonparaffinic character, combined with high port loading and low primary aeration.

As applied to town gas manufacture by continuous reforming or cracking with steam and air, the most critical variable is the ratio of hydrogen, with its low specific gravity and high flame speed, to inerts (nitrogen and carbon dioxide), with their high specific gravity and diluent effect. The relative amounts of "steam gas" and "air gas" largely control the Wobbe index and permit close matching of burning characteristics with any base or adjustment gas in the town gas category. The autothermic processes which depend on air addition to achieve the necessary reaction temperatures will, of course, produce gases with lower hydrogen and high inert contents. They will, therefore, have higher specific gravities and lower heating values, and will require more high heating value gas addition. The lower intrinsic flame speed resulting from lower hydrogen content is, however, counteracted by the higher primary aeration which increases burning velocity up to about 100 percent primary aeration.

Cyclic Catalytic Reforming or Cracking

These processes differ from the continuous processes in that the endothermic heat requirements are met in part by heat storage in the catalyst bed and the nickel catalyst is alternatingly exposed to reducing and oxidizing conditions. In the continuous processes, the catalyst is always in reduced condition. Further, all of the cyclic processes operate essentially at atmospheric pressure. They are widely commercialized (Table 10) and, as of 1965, comprise the largest number of manufactured gas installations utilizing petroleum feedstocks.

There are two types, distinguished by the use of steam only during the make period, and by the use of both steam and air (Table 10). The most widely used types of the cyclic catalytic steam reforming or cracking processes are the U.G.I. CCR process, the Segas process and the O.N.I.A.-G.E.G.I. process. Typical set configurations for these processes are shown in Figs. 13 and 14. These processes are often regenerative — that is, a portion of the sensible heat in the hot flue gas leaving the catalyst bed during the air blast period, as well as of the hot product gas and unreacted steam leaving the catalyst bed during the make period, is stored in refractory shapes to be given up later to reactant steam and combustion air. This is entirely analogous to cyclic-regenerative high-Btu oil gas operation discussed in the section on pyrolysis processes, except that much more steam is used during the make period and steam is a reactant instead of just a diluent and sweep gas. The nonregenerative apparatus uses a waste heater boiler for heat recovery, and often a waste heat boiler is also used with regenerative apparatus (Figs. 13 and 14).

The cyclic processes which use steam and air during the make period are usually similar in design to the nonregenerative O.N.I.A.-G.E.G.I. process (Fig. 14) and are limited to the use of feedstocks in the propane through naphtha range. They are normally used to produce only gases in the 300 to 500 Btu/SCF range. This contrasts with the cyclic reforming and cracking processes using only steam, which are

being used with the entire range of petroleum feedstocks to produce gases from 300 to 1000 Btu/SCF.

It is important to note the function of the catalyst beyond that of simple accelerating steam-hydrocarbon reactions. During the heating period of the cycle, the oxidation of the nickel releases a substantial amount of heat:

$$2Ni + O_2 \rightarrow 2NiO + 1300 \text{ Btu/lb of nickel}$$

During the make period, the feed hydrocarbon reduces the nickel oxide in a slightly endothermic reaction:

$$(2n + m/2)\ NiO + C_nH_m \rightarrow (2n + m/2)\ Ni + nCO_2 + (m/2)\ H_2O - 100 \text{ Btu/lb of nickel}$$

Thus, the catalyst becomes a very effective heat transfer and oxygen transfer medium. Because of the very high heat release during nickel oxidation, some of the processes control the free oxygen contacting the reduced catalyst.

Cyclic operation allows the use of sulfur-containing feedstocks as well as feedstocks depositing coke and pitch. Although the activity of the catalyst declines during each make period, in essence changing the process from steam reforming or cracking to simple pyrolysis in every cycle, these contaminants are burned off during the subsequent heat period.

It is apparent that the catalyst must be extremely stable to withstand such radical treatment. The major cause of permanent activity loss for nickel catalysts supported by alumina is spinel formation. This is readily determined by the loss of acid-soluble nickel.

The co-impregnation of a small amount of magnesium oxide with the nickel oxide has been found to improve the activity and stability of alumina-supported catalysts. Magnesia-supported nickel catalyst does not lose activity due to spinel formation, but rather due to solid solution of nickel oxide in magnesia. Both types of activity loss are accelerated by exposure to excessive temperatures (say, 1900°F or more) in an oxidizing atmosphere.

The United Gas Improvement Company cyclic catalytic reforming (CCR) process (Fig. 13) was originally developed to convert carbureted water gas sets to the production of carrier gas by placing in the former superheater a bed of nickel catalyst on a refractory support, and by using the carbureter as a combustion chamber and process steam superheater. Natural gas or other hydrocarbon fuels are burned in the combustion chamber to heat the refractories and the catalyst bed, and to remove deposited carbon and sulfur compounds from the catalyst. Heat from the blast gas is recovered in a waste-heat boiler. In the subsequent make period, steam is superheated by checkerbrick at the bottom of the combustion chamber, and the process hydrocarbon is introduced into the bottom connection between the combustion chamber and the catalyst chamber.

Although this process was originally developed for use with natural gas and LPG to produce low heating value, low specific gravity, carrier gases suitable for re-enrichment with natural gas or propane, in the past several years it has been used with hydrocarbon feeds of increasing molecular weight, and is also suitable for high-Btu gas production at reduced operating temperatures. Typical operation for low-Btu gas production with kerosene is shown in Fig. 13.

The Segas process was developed by the South Eastern Gas Board in Great Britain, and is similar to the CCR process and the French O.N.I.A.-G.E.G.I. process. Originally, lime-bauxite or lime-magnesite catalysts were used instead of

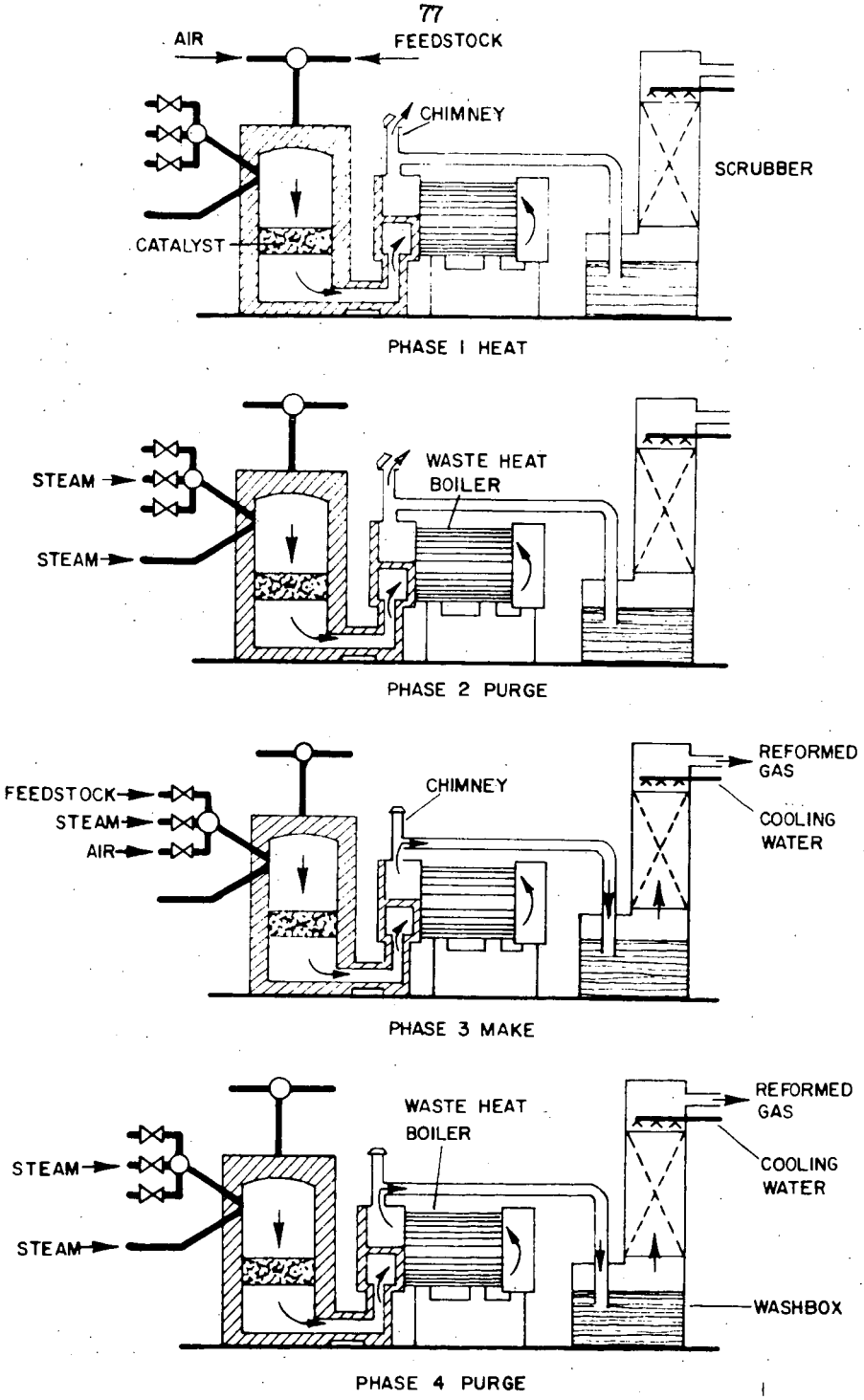

Figure 15.—MICRO-SIMPLEX PROCESS CYCLE

supported metal catalysts. The Segas process also uses only regenerative heat recovery in the commercial designs described in the literature. Further, in the Segas and O.N.I.A.-G.E.G.I. processes, the reactants flow downward through the catalyst bed, whereas in the CCR process the flow is upward. The most recent designs of all of the three cyclic catalytic cracking processes employ the principle of process hydrocarbon introduction into superheated steam at a point where no direct contact of feed hydrocarbon and catalyst bed is possible.

When a carbureted water gas set is converted to the Segas process, the blue-gas generator becomes the steam preheater, the carburetor becomes the catalyst chamber, and the superheater becomes the air preheater. During the make period, steam is superheated in the first vessel, oil is introduced at the top of the first and second vessels, and the cracked products are regenerated in the air preheater and then pass through the washbox. The blast is in the reverse direction. Deposited carbon is burned off, and additional fuel is introduced in the bottom of the air preheater. The Segas and O.N.I.A.-G.E.G.I. processes are also capable of producing gases over the entire range of utility gas requirements. Operating results for self-steaming and regenerative O.N.I.A.-G.E.G.I. plants typical of all of the cyclic catalytic steam cracking processes are given in Table 12.

A typical cyclic catalytic reforming or cracking process for light distillates, employing both steam and air during the make period, is the Micro-Simplex process. Many commercial installations of this process have been made in France and England. The cycle is shown in Fig. 15. A typical product gas analysis for light naphtha operation is (in volume percent): CO_2 = 3; H_2 = 43; N_2 = 17; CO = 20; CH_4 = 9; C_2H_6 = 1; Olefins = 7; heating value = 450 Btu/SCF; specific gravity (air = 1) = 0.57.

PARTIAL COMBUSTION PROCESSES

Two types of partial combustion processes are in commercial use (Table 13). In one, air is used at temperatures below 2000°F. These are essentially pyrolysis processes in which the heat requirements are met by burning a portion of the feed, so that the same feedstock properties are critical as in pyrolysis and the same basic considerations apply. For example, liquid aromatic byproducts are formed from feedstocks boiling above butane and only premium (low C/H ratio, negligible Conradson carbon residue) distillate feedstocks can be used because of coke and pitch deposition problems.

In the second type of partial combustion processes, petroleum feed is reacted with oxygen in the presence of steam at temperatures of 2000° to 3000°F to form hydrogen and carbon oxides. A generalized reaction characterizing this process is:

$$3C_nH_m + (2n - m/2)\,H_2O + (n + m/4)\,O_2 \rightarrow$$
$$(2n - m/4)\,CO + m/4\,H_2O + (n - m/4)\,CO_2$$
$$+ (2n + 3/4m)\,H_2$$

In this version of the process, feedstock properties are the least critical. Gas yields still decrease as C/H ratio increases, steam requirements increase and there is a tendency for increased carbon (lampblack) formation. However, no basic changes in partial combustion processes employing oxygen need to be made over the entire range of possible petroleum feedstocks, which is in sharp contrast with pyrolysis, hydrogenolysis and catalytic steam reforming or cracking processes.

Three oxygen processes are in wide commercial use for the production of ammonia and other synthesis gases from feedstocks ranging from methane to Bunker "C" fuel oil (Table 13). The Koppers-Totzek process operates at atmospheric pres-

Table 12.—TYPICAL DATA FOR VARIOUS O.N.I.A.-G.E.G.I. PLANTS
(From Reference 128)

Oil Properties	Fuel-Oil "A"	Fuel-Oil "B"	Fuel-Oil "C"	Gas-Oil "D"	Fuel-Oil "A"	
°API	18.2	15.7	13.0	35.6	18.2	18.2
Conradson Carbon Residue, wt %	7.2	9.7	13.0	0.0	7.2	7.2
Sulfur, wt %	3.5	5.1	4.0	1.04	3.5	3.5
C/H Weight Ratio	7.35	7.48	8.00	6.45	7.35	7.35
Product Gas Properties						
Composition, vol %						
CO_2	5.4	9.0	6.6	5.0	7.5	7.4
O_2	0.7	0.2	0.6	0.2	0.0	0.0
CO	23.2	19.8	22.8	23.5	25.8	6.2
H_2	51.8	52.2	53.0	54.5	50.4	24.4
N_2	2.3	2.6	1.7	2.8	5.1	2.0
C_nH_m	4.1	3.5	3.3	4.5	1.5	29.1
$C_nH_{(2n+2)}$	12.5	12.7	12.0	9.5	9.7	30.9
Total	100.0	100.0	100.0	100.0	100.0	100.0
Heating Value, Btu/SCF*	468	466	438	504	363	996
Specific Gravity (air = 1)	0.50	0.54	0.50	0.51	0.52	0.78
Thermal Efficiency, %**	64	63	59	69	70	59

* Standard cubic foot at 60°F, 30 in. of mercury, saturated with water vapor
** Excluding tar averaging about 8 percent of total oil used

Table 13.—PARTIAL COMBUSTION PROCESSES

Reactor Type	Continuous (empty)	Continuous (empty)	Cyclic (fixed beds of refractory)
Heat Source	Partial combustion with air and reactant preheat	Partial combustion with oxygen	Internally heated refractory plus partial combustion with air
Feedstocks			
C/H Weight Ratio	4.5-6.5	4.5-10	4.5-5.7
Conradson Carbon Residue, wt %	0-trace	0-18	0
Distillation Range	Up to 650°F	No limit	Up to 300°F
Sulfur, wt %	No limit	No limit	No limit
Types	Propane, butane, natural gasoline, light and heavy naphtha, No. 1 and No. 2 diesel oil, No. 1 fuel oil, premium gas oil	All petroleum feedstocks from propane to Bunker "C" fuel oil	Propane, butane, natural gasoline, light naphtha
Process Conditions			
Temperature, °F	1300-1900	2000-3000	1200-1700
Pressure, psig	Atmospheric-30	Atmospheric-600	Atmospheric
Residence Time, sec	Below 2	Below 10	Below 1
Reactant Feeds			
Steam, lb/lb	–	0-1	–
Air, SCF/lb	14-40	–	10-20
Oxygen, SCF/lb	–	12-15	–
Heat of Combustion of Product Gas Due to Process Oil, %	70-95	80-85	90-95
Products			
Gas			
Heating Value, Btu/SCF	300-700 (not including gases containing substantial unreacted propane or butane)	Approx. 300	500-1200 (including unreacted feedstock components)
Composition	CH_4, C_2H_4, H_2, CO, CO_2, N_2	H_2, CO, CO_2	CH_4, C_2H_4, C_3H_6, C_4 olefins and diolefins, unreacted C_3-C_5 paraffins, H_2, CO, CO_2, N_2
Other	Light aromatics and aromatic tar with liquid feeds only	Carbon	Light aromatics with liquid feeds only
Commercial Processes (including related petrochemical processes)	Improved Dayton Process, G. E. I. M. Process, Gas Light and Coke Co. Process	Shell Process, Texaco Process, Koppers-Totzek Process	Koppers-Hasche Process
Pilot Plant Processes	Autothermic Cracking Process (Universal Oil Products Co.), Dayton-Faber Process (oxygen-enriched air gas heating values up to 900 Btu/SCF)		

Table 14.–PARTIAL COMBUSTION OF PROPANE IN A KOPPERS-HASCHE REFORMER
(From Reference 145)

Make Gas Heating Value, Btu/SCF	590	680	785	890	991	1091
Make Gas Composition, vol %						
CO_2	2.1	2.0	1.4	1.0	0.7	0.7
C_2H_2	0.7	0.3	0.2	0.2	0.2	0.2
C_3+	2.2	4.0	6.1	7.4	7.6	7.5
C_2H_4	12.8	12.9	12.6	12.1	11.5	10.7
O_2	1.8	1.7	1.7	1.7	1.7	1.7
CO	6.0	5.0	4.4	3.9	3.6	3.3
H_2	8.7	7.1	6.4	5.9	5.5	5.2
CH_4	12.3	12.5	12.2	11.7	11.0	10.2
C_3H_8	5.9	8.2	11.0	14.5	19.2	24.2
N_2	47.5	46.3	44.0	41.6	39.0	36.3
Make Gas Specific Gravity, air = 1	0.89	0.93	0.97	1.01	1.04	1.07
Air/Propane Feed Ratio	2.3	1.9	1.6	1.4	1.2	1.1
Average Combustion Zone Temperature, °F	1550	1490	1430	1370	1310	1250
Thermal Recovery, %	92	93	94	95	96	96.7

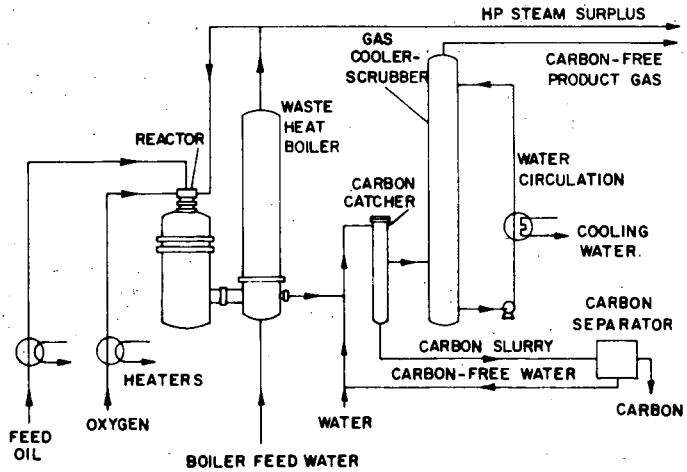

Figure 16.–BASIC SHELL GASIFICATION PROCESS FLOW DIAGRAM

sure; the Texaco and Shell partial oxidation processes can operate at up to 600 psig. Only a single unit of this type (Shell) is known to be used for utility gas manufacture. This plant is located in the U.K. and refinery gas is used to cold enrich the low Btu product gas to town gas specifications. High investment and operating cost have made these processes non-competitive for utility gas manufacture with the processes discussed in the preceding sections. Typical operating data for a feedstock equivalent to a high-grade residual fuel oil and based on Texaco results have already been given in Fig. 10 as part of an overall high-pressure hydrogasification scheme. A flow sheet for the very similar Shell process is given in Fig. 16.

Several continuous partial air combustion processes are still in commercial use (Table 13), but they are now considered obsolete because of the inferior gas quality and higher liquid byproduct formation than with the various catalytic air-steam-hydrocarbon gas manufacturing processes. There is little prospect for further development.

There is, however, a cyclic partial air combustion process that has found wide commercial use and holds continuing interest. This is the Koppers-Hasche process (Table 13) which is characterized by very low investment cost and simplicity of operation.

It is a regenerative partial combustion process of high thermal efficiency, in which a mixture of hydrocarbon gas over vapor and air is fed in sequence through a regenerator, a combustion chamber, and a second regenerator. The regenerator tiles are of a special design allowing high sensible heat recoveries. The flow is reversed after suitable intervals to maintain minimum discharge temperatures. At present, the Koppers-Hasche process is primarily used for partial-combustion reforming of feedstocks ranging from propane to light naphtha, to 500-700 Btu/SCF gases of high specific gravity which are used to supplement or replace gases produced by less economical manufacturing processes (Table 14).

When the partial combustion cycle is used to produce 1000 Btu/SCF gases, the high nitrogen content and the large percentage of unconverted C_3-plus hydrocarbons results in specific gravities of over one and, consequently, low burner heat inputs. However, after cold enrichment with propane to about 1200 Btu/SCF, the substitutability for natural gas has been found to be higher than that of propane-air gases of equal heating value. Low specific gravity, high-Btu gases have been produced in experimental operation by pyrolysis in the presence of various amounts of steam, with a conventional heat-make cycle similar to that used in the cyclic high-Btu oil gas process.

GAS PROCESSING

In all of the catalytic steam or steam-air gasification processes, and in the partial combustion processes, substantial amounts of highly toxic carbon monoxide are formed. The carbon monoxide concentration can be lowered to acceptable levels, normally below 3 to 5 volume percent in the send-out gas, by the well-known catalytic carbon monoxide shift reaction:

$$CO + H_2O \rightleftharpoons CO_2 + H_2$$

With the standard sulfur-resistant chromia-promoted iron oxide catalyst, this reaction proceeds at space velocities of 300-1000 SCF/CF catalyst-hr at temperatures of 700° to 850°F. An excess of steam is required to maintain catalyst activity. Conversion is favored by excess steam, and by the lowest practical temperature that allows reasonable approach to equilibrium. Pressure has no effect.

Many petroleum gasification processes now incorporate this reaction as an integral process step, particularly when the exit gas from the gasification step is at

the proper temperature and contains sufficient unreacted steam, or can be adjusted to this condition by water or steam injection. No prior sulfur removal is normally required.

The carbon dioxide formed in carbon monoxide conversion, or excessive concentrations of carbon dioxide present as the result of the gasification reaction, may be removed by a number of regenerative scrubbing processes — monoethanolamine, hot carbonate, Rectisol and others. These processes also remove hydrogen sulfide, a major and highly undesirable contaminant of all fuel gases manufactured from sulfur-bearing petroleum feedstocks. A more common method for hydrogen sulfide removal is with fixed beds of alkalized iron oxide on a suitable support. A fluid-bed process and various selective scrubbing processes are also available.

Organic sulfur — mercaptans, disulfides, carbonyl sulfide, carbon disulfide, thiophene, etc. — is normally not removed except when special catalytic processing with nickel or other Group VIII metal catalyst is required. The acid gas (carbon dioxide and hydrogen sulfide) scrubbing processes noted above remove various proportions of the organic sulfur compounds, and the iron oxide processes may also be used to oxidize mercaptans to the more easily removed corresponding disulfides. Partial removal of many of the organic sulfur compounds is also accomplished by oil scrubbing, practiced to recover the aromatic light oil content (primarily benzene, toluene and the xylenes) from gases produced in many of the petroleum gasification processes. However, essentially complete removal of organic sulfur usually requires passage through activated carbon, periodically regenerated with superheated steam or hot gases.

In addition to carbon monoxide conversion, two types of catalytic processing of manufactured gases are becoming of increased interest. One is autohydrogenation of gases containing large proportions of olefins and diolefins as well as hydrogen. This process was first proposed by the Institute of Gas Technology to improve the substitutability of such gases for natural gas by increasing their proportion of paraffins by such reactions as:

$$C_2H_4 + H_2 \rightleftharpoons C_2H_6$$

$$C_3H_6 + H_2 \rightleftharpoons C_3H_8$$

$$C_4H_6 + 2H_2 \rightleftharpoons C_4H_{10}$$

These proceed readily over active Group VIII metal catalysts, such as nickel on kieselguhr support, at 300° to 500°F and at pressures from atmospheric on up. Work is underway in France and Italy to put this process into commercial operation.

A similar catalytic process is methanation of carbon monoxide and hydrogen, common constituents of steam reforming or cracking and partial combustion processes. This reaction,

$$CO + 3H_2 \rightleftharpoons CH_4 + H_2O$$

proceeds rapidly over highly active nickel catalyst at 650° to 900°F and is favored by pressure. Feed gas sulfur content must be reduced to 0.1 ppm or less to avoid rapid catalyst deactivation. Methanation has been considered actively as a means for manufacturing town gases and natural substitutes from low heating value gases for many years, although largely with coal as the basic raw material. However, as early as 1951, the Surface Combustion Company reported pilot plant results on a naphtha steam cracking-methanation process, similar to the ones now being actively considered in Europe.

BIBLIOGRAPHY

General References

1. Arne, F., "Manufactured Gas... Which Processes Will Be Used to Supplement Natural Gas?" Chem. Eng. 65, 121-32 (1958) March 24.

2. Burns, J., "Report of the Committee on the Production of Manufactured Gases," Intern. Gas Conf., 9th Conf., The Hague, 1964, IGU/B-64.

3. Gaikhorst, G., Klein, W. J., and Vernout, J. A., "Catalytic and Thermal Conversion of Gases," Mededel. Gasstichting No. 23 (1955) April; Het Gas 75, 55-69 (1955) April (In Dutch).

4. Institution of Gas Engineers, "Further Survey of the Development of the Use of Petroleum Products in Town Gas Manufacture," Intern. Gas Conf., 8th Conf., Stockholm, 1961, IGU/9-61.

5. Linden, H. R. and Elliott, M. A., "Present and Future Methods for the Utilization of Fluid Fuels in Supplying High-Btu Gas," A.G.A. Operating Section Proceedings-1958, CEP-58-9; Part I, Am. Gas J. 186, 34-38 (1959) January; Part II, ibid., 22-27 (1959) February; Part III, ibid., 39-41 (1959) March; Part IV, ibid., 26-27 (1959) April; Part V, ibid., 50-56 (1959) May.

6. Milner, G., "Developments in Manufacturing Town Gas," J. Inst. Fuel 36, 123-32 (1963) March.

7. Milner, M. J., "Gas Manufacture," Part I, Chem. Process Eng. 46, 208-12 (1965) April; Part II, ibid., 235-41 (1965) May.

8. Morgan, J. J., "Gasification of Hydrocarbons." New York: Moore Publishing Co., 1953.

9. Morgan, J. J., "High B.t.u. Oil Gas from Fuel Oils with High Carbon Content," Part I, Gas Age 110, 30-37 (1952) September 25; Part II, ibid., 38-44 (1952) October 9.

10. Morgan, J. J., "High B.t.u. Oil Gas from Low Carbon Oils," Part I, Gas Age 110, 38-44 (1952) August 28; Part II, ibid., 50-55 (1952) September 11.

11. Morgan, J. J., "High B.t.u. Water Gas," Part I, Gas Age 110, 31-35 (1952) July 31; Part II, ibid., 44-49 (1952) August 14.

12. Padovani, C., "Gasification of Liquid Hydrocarbons," Gas J. 319, 33-36, 38 (1964) July 8.

13. Ricketts, T. S., "Modern Methods of Gas Manufacture Including the Lurgi Process," J. Inst. Fuel 37, 328-41 (1964) August.

14. United Nations, Economic Commission for Europe, "Economy of the Use of Light Distillates and Other Liquid Petroleum Products as Raw Materials for the Gas Industry," Document No. ST/ECE/GAS/9. Geneva: United Nations, 1963.

Key Properties of Petroleum Feedstocks

15. Linden, H. R., "Fuels (Combustion Calculations)," in Kirk, R. E. and Othmer, D. F., "Encyclopedia of Chemical Technology," Vol. 6, 913-35. New York: The Interscience Encyclopedia, Inc., 1951.

16. Linden, H. R., "The Relationship of Physical Properties and Ultimate Analysis for Liquid Hydrocarbons," Oil Gas J. 48, 60-62, 65 (1949) July 7.

17. Linden, H. R. and Othmer, D. F., "Combustion Calculations for Hydrocarbon Fuels," Part I, Chem. Eng. 54, 115-19 (1947) April; Part II, ibid., 148-53 (1947) May; Fuel Oil & Oil Heat 6, 72 (1947) September.

18. Linden, H. R. and Pettyjohn, E. S., "Process Variables and Oil Selection for High Btu Oil Gas Production," A.G.A. Proceedings-1951, 553-75.

19. Linden, H. R. and Pettyjohn, E. S., "Selection of Oils for High-Btu Oil Gas." Institute of Gas Technology Research Bulletin No. 12 (1952) April.

20. Pettyjohn, E. S. and Linden, H. R., "Estimating Potential Gasification Value and Yields of Oils for Gas Plants," Part I, Am. Gas J. 171, 26-31, 57 (1949) October; Part II, ibid., 31, 34-35 (1949) November.

21. Pettyjohn, E. S. and Linden, H. R., "Selection of Oils for Carbureted Water Gas." Institute of Gas Technology Research Bulletin No. 9 (1952) March.

Pyrolysis Processes

References 5, 18, 19

22. Bair, W. G. and Linden, H. R., "Continuous Production of Natural Gas Supplements from Natural Gasoline and Petroleum Distillates in a Tube Furnace." Institute of Gas Technology Research Bulletin No. 27 (1960) June.

23. Bayer, W., "Experience with the Lurgi-Ruhrgas-Sand Cracker with Special Emphasis on the Process Development by Farbenfabriken Bayer," Erdol u. Kohle 15, 799-802 (1962) October (In German).

24. Bell, J. F., "Portland's Experiments with High-Btu Oil Gas," Gas 27, 52-56 (1951) November.

25. Boyer, E. G., "Hall High B.t.u. Oil Gas Process," Gas Production Research Committee Research Bulletin Project HB-1. New York: American Gas Association, 1949.

26. Carroll, J. W., "Investment and Operating Costs for Producing High Btu Oil Gas," A.G.A. Operating Section Proceedings-1957, CEP-57-4.

27. Chaney, N. K., "The Thermofor Pyrolytic Cracking Process for the Production of Oil Gas," Gas Operations Research Bulletin No. 7. New York: American Gas Association, 1956.

28. Eastwood, S. C. and Potas, A. E., "A New Process-Thermofor Pyrolytic Cracking," Petrol. Refiner 27, 468-70 (1948) September.

29. Hall, E. L. (assignor to American Gas Association) "Process for Manufacturing Oil Gas." U.S. Patents 2,580,766 and 2,580,767 (1952) January 1.

30. Harrison, A. D., "The Economics of Peak Shaving and Storage Gas," Gas Age 115, 25-30, 73-74 (1955) March 10.

31. Henry, H. M., "Economics of Peak Shaving," A.G.A. Proceedings-1952, 818-42.

32. Henry, H. M., "Oil-Gas by Two and Four Shell Sets," A.G.A. Proceedings-1950, 416-26; A.G.A. Monthly 32, 21-23, 62-65 (1950) November.

33. Hull, W. Q. and Kohlhoff, W. A., "Oil Gas Manufacture," Ind. Eng. Chem. 44, 936-48 (1952) May.

34. Joy, P. C., "Advances in High Btu Oil-Gas Manufacturing in Hawaii," A.G.A. Operating Section Proceedings-1958, CEP-58-12.

35. Linden, H. R., "Methods of Estimating Oil Gasification Yields," A.G.A. Proceedings-1949, 755-80.

36. Linden, H. R., "Production of Oil Gas-Thermal Cracking," Petrol. Processing 6, 1389-94, 1396 (1951) December.

37. Linden, H. R., Bair, W. G., and Pettyjohn, E. S., "Continuous Production of Natural Gas Substitutes by Pressure Gasification of Light Hydrocarbons," A.G.A. Proceedings-1954, 616-27; Gas Age 113, 19-26, 68, 70 (1954) May 20; Gas World 140, 98-104 (1954) July 10; Gas 30, 68-70 (1954) May.

38. Linden, H. R., Brooks, C. E., and Miller, L. N., "Production of Natural Gas Substitutes by Thermal Cracking of Natural Gas Liquids," Ind. Eng. Chem. 47, 2475-78 (1955) December.

39. Linden, H. R., Guyer, J. J., Hall, C. A. M., and Riesz, C. H., "Production of Oil Gases as Substitutes for Natural Gases," A.G.A. Proceedings-1952, 702-15.

40. Linden, H. R. and Peck, R. E., "Gaseous Product Distribution in Hydrocarbon Pyrolysis," Ind. Eng. Chem. 47, 2470-74 (1955) December.

41. Linden, H. R. and Reid, J. M., "Ethylene Production Process Variables," Chem. Eng. Progr. 55, 71-78 (1959) March.

42. Linden, H. R. and Reid, J. M., "New Data for Making Petrochemicals," Petrol. Refiner 35, 189-95 (1956) June.

43. Linden, H. R., Reid, J. M., Bair, W. G., and Pettyjohn, E. S., "Initial Operation of a Four-Shell Cyclic Regenerative Pressure Oil Gas Pilot Unit," A.G.A. Proceedings-1955, 920-30.

44. Loughry, T. F., "The Production of High Btu Gas with the TPC Process," A.G.A. Proceedings-1954, 760-72.

45. Loughry, T. F., "TPC-A Thermal Cracking Process for Producing High Btu Gases," Gas 29, 27-30 (1953) November.

46. Loughry, T. F., "The TPC Oil Gas Process," A.G.A. Proceedings-1953, 924-28.

47. Nicol, D. L., Brown, R. A., and Linden, H. R., "Interchangeability of Oil Gas and Natural Gas," A.G.A. Proceedings-1952, 634-56.

48. Nicol, D. L., Guyer, J. J., Searight, E. F., and Linden, H. R., "Improvement of Oil Gas Substitutability for Natural Gas by Pressure Gasification." Institute of Gas Technology Interim Report (1953) February.

49. Pettyjohn, E. S. and Linden, H. R. (assignor to Institute of Gas Technology) "Apparatus and Cyclic Regenerative Process for Making Oil Gas." U.S. Patent 2,807,528 (1957) September 24.

50. Pettyjohn, E. S. and Linden, H. R. (assignor to Institute of Gas Technology) "Method of Making a Fuel Gas Interchangeable with Natural Gas." U.S. Patent 2,734,809 (1956) February 14.

51. Pettyjohn, E. S. and Linden, H. R. (assignor to Institute of Gas Technology) "Method of Preparing Fuel Gas Interchangeable with Natural Gas." U.S. Patent 2,707,675 (1955) May 3.

52. Reid, J. M., Bair, W. G., and Linden, H. R., "Natural Gas Supplements by Cyclic-Regenerative Hydrogasification of Oils." Institute of Gas Technology Research Bulletin No. 28 (1960) March.

53. Reid, J. M., Bair, W. G., and Linden, H. R., "Production of High-Btu Oil Gas in a Cyclic-Regenerative Pilot Unit with Hydrogen as Carrier Gas," J. Inst. Fuel 31, 325-34 (1958) July; Gas J. 295, 433-42 (1958) August 27.

54. Reid, J. M., Linden, H. R., and Pettyjohn, E. S., "Production of Petrochemicals from Natural Gas and Natural Gas Liquids," A.G.A. Proceedings-1955, 931-45.

55. Reid, J. M., Merwin, W. J., von Fredersdorff, C. G., Linden, H. R., and Pettyjohn, E. S., "Fluid Gasification of Oil." Institute of Gas Technology Research Bulletin No. 16 (1953) November.

56. Shultz, E. B., Jr., Guyer, J. J., and Linden, H. R., "Pyrolysis of Crude Shale Oil," Ind. Eng. Chem. 47, 2479-82 (1955) December.

57. Searight, E. F. and Linden, H. R., "Influence of Operating Variables upon the Substitutability of High-Btu Oil Gases," A.G.A. Proceedings-1953, 858-76.

58. Searight, E. F., Boyd, J. R., Parker, R., and Linden, H. R., "Appliance Tests on the Substitutability of High-Btu Oil Gas for Natural Gas," A.G.A. Proceedings-1954, 675-97.

59. Searight, E. F., Linden, H. R., Nicol, D. L., and Pettyjohn, E. S., "Interchangeability of High-Btu Oil Gases and Natural Gases." Institute of Gas Technology Research Bulletin No. 24 (1956) January.

60. Utermohle, C. E., "Hall High B.t.u. Oil Gas Process," A.G.A. Monthly 30, 27-28, 54-55 (1948) November; A.G.A. Proceedings-1948, 325-29.

61. Utermohle, C. E., "How Baltimore Helped Develop the High-Btu Oil Gas Process," Gas 29, 30-33 (1953) August.

Hydrogenolysis Processes and Continuous Low-Temperature Catalytic Steam Reforming or Cracking

References 5, 21, 22, 35, 37, 52, 53

62. "Catalytic Rich Gas Process," Petrol. 27, 602-03 (1964) December.

63. Cockerham, R. G., Percival, G., and Yarwood, T. A., "The Catalytic Gasification of Petroleum Feedstocks," Gas J. 320, 385-91 (1964) December 23.

64. Cockerham, R. G. and Percival, G., "Experiments on the Production of Peak-Load Gas from Methanol and Light Petroleum Distillates," Trans. Inst. Gas Engrs. 107, 390-433 (1957-58).

65. Cockerham, R. G. and Percival, G., "The Production of High B.t.u. Gas from Light Petroleum Distillates by Low Temperature Catalytic Steam Reforming," American Chemical Society, Division of Fuel Chemistry Preprints 8, No. 1, 52-62 (1964) April.

66. Cribb, G. S., "Progress in the Production of Gas from Light Petroleum Products," Brit. Chem. Eng. 9, 366-70 (1964) June.

67. Dent, F. J., "A Detailed Explanation of the Principles of the Latest Gasmaking Processes," Gas Times 99, 7-10 (1965) February.

68. Dent, F. J., "Principles of the New Gas Making Processes," Gas World and Gas and Coke 27, 275-85 (1965) February 27.

69. Dent, F. J. and Moignard, L. A. (assigned to The Gas Council) "Gasification of Hydrocarbon-Containing Oils." U.S. Patent 3,124,436 (1964) March 10.

70. Dent, F. J., Edge, R. F., Hebden, D., Wood, F. C., and Yarwood, T. A., "Experiments on Hydrogenation of Oils to Gaseous Hydrocarbons," Gas Council Res. Commun. GC 37. London: The Council, 1956; Gas J. 288, 600-04, 606-07, 610 (1956) December 5; Gas Times 89, 259-60 (1956) December 7; Gas World 144, 1078, 1080 (1956) November 24.

71. "The ICI Town Gas Process; A Development of the ICI Lean Gas Method," Gas World and Gas and Coke 26, 738-40 (1964) December 19/26.

72. Linden, H. R. (assignor to Institute of Gas Technology) "Cyclic Regenerative Process for Catalytic Gasification of Petroleum." U.S. Patent 2,907,647 (1959) October 6.

73. Linden, H. R., Guyer, J. J., and Pettyjohn, E. S., "Production of Natural Gas Substitutes by Pressure Hydrogasification of Oils," A.G.A. Proceedings-1954, 639-54.

74. Linden, H. R., Guyer, J. J., Hall, C. A. M., and Riesz, C. H., "Production of Oil Gases as Substitutes for Natural Gases," A.G.A. Proceedings-1952, 702-15.

75. Linden, H. R., Reid, J. M., and Bair, W. G. (assignor to Institute of Gas Technology) "Process for Manufacturing Olefins and Diolefins." U.S. Patent 2,881,232 (1959) April 7.

76. Milner, M. J., "Some Recent Developments in the Production of Rich Gas from Liquid Hydrocarbons." Paper presented at American Gas Association Production Conference, Buffalo, N. Y., May 24, 1965.

77. Murthy, P. S. and Edge, R. F., "Hydrogenation of Oils to Gaseous Hydrocarbon," Gas and Coke 25, 54-58 (1963) February; Inst. Gas Engrs. J. 3, 459-81 (1963) August.

78. "New Methods of Gas-Making," Chem. Trade J. 155, 509 (1964) October 16.

79. "New Processes in Gas Making," Petrol. Press Serv. 32, 64-65 (1965) February.

80. Pettyjohn, E. S. and Linden, H. R. (assignor to Institute of Gas Technology) "Apparatus for Pressure Hydrogasification of Petroleum Hydrocarbons." U.S. Patent 2,975,044 (1961) March 14.

81. Pettyjohn, E. S. and Linden, H. R. (assignor to Institute of Gas Technology) "Cyclic Regenerative Process for Making Fuel Gas." U.S. Patent 2,882,138 (1959) April 14.

82. Pettyjohn, E. S. and Linden, H. R. (assignor to Institute of Gas Technology) "Method of Making a Fuel Gas." U.S. Patent 2,759,806 (1956) August 21.

83. Pettyjohn, E. S. and Linden, H. R. (assignor to Institute of Gas Technology) "Pressure Hydrogasification of Natural Gas Liquids and Petroleum Distillates." U.S. Patent 2,860,959 (1958) November 18.

84. Shultz, E. B., Jr. and Linden, H. R. "Batch Hydrogenolysis Reactions of Pure Compounds Related to Petroleum Oils," Ind. Eng. Chem. 49, 2011-16 (1957) December.

85. Shultz, E. B., Jr. and Linden, H. R., "High-Pressure Hydrogasification of Petroleum Oils." Institute of Gas Technology Research Bulletin No. 29 (1960) December.

86. Shultz, E. B., Jr. and Linden, H. R., "Hydrocrack and Gasify to Upgrade Stocks," Petrol. Refiner 36, 205-10 (1957) September.

87. Shultz, E. B., Jr. and Linden, H. R., "Hydrogenolysis of Petroleum Oils," Ind. Eng. Chem. 48, 895-99 (1956) May.

88. Shultz, E. B., Jr. and Linden, H. R., "Pressure Hydrogenolysis of Paraffins," I&EC Process Design & Develop. 1, 111-16 (1962) April.

89. Shultz, E. B., Jr., Channabasappa, K. C., and Linden, H. R., "Hydrogasification of Petroleum Oils and Bituminous Coal to Natural Gas Substitutes," Ind. Eng. Chem. 48, 894-905 (1956) May.

90. Shultz, E. B., Jr., Mechales, N., and Linden, H. R., "Producing Natural Gas Substitute from Petroleum by Continuous Pressure Hydrogenolysis," Ind. Eng. Chem. 52, 580-83 (1960) July.

Continuous High-Temperature Catalytic Steam or Steam Air Reforming or Cracking

91. Andrew, S. P. S., "Naphtha Reforming for Synthesis Gas and Town Gas Production," Chem. & Ind. (London) 826-30 (1965) May 15.

92. Barnes, J. M. and Bergey, E. S., "Carrier Gas Production; Eastern Utility Installs Catalytic Reforming Units," Gas 33, 39-42 (1957) December.

93. "Hythe Works," Gas J. 318, 182-84, 186, 189-93 (1964) May 20.

94. "I.C.I. Steam/Naphtha Process," Gas and Coke 25, 258-60 (1963) June.

95. "I.C.I. Steam/Naphtha Process," Gas J. 315, 191-93 (1963) August 21.

96. "I.C.I. Steam-Naphtha Process Method for Production of Hydrogen-Containing Gases," Petrol. Times 67, 223-24 (1963) May 3.

97. "The Klönne System for Town Gas Production," Gas World and Gas and Coke 26, 232-33 (1964) August.

98. Lockerbie, T. E. and Fox, J. M. (assignor to The M. W. Kellogg Co.) "Production of Hydrogen by Catalytic Steam Reforming of Hydrocarbons." U.S. Patent 3,106,457 (1963) October 8.

99. Nilsen, A., "New Catalytic Reforming Process Arrives," Gas Age 118, 55-58 (1956) October 4.

100. Pearce, T. J. P. (assignor to Imperial Chemical Industries Ltd.) "Steam Reforming of Hydrocarbons." U.S. Patent 3,103,423 (1963) September 10.

101. Ribesse, J. and Van Maele, C., "The Thermodynamic Study of the Reforming of Hydrocarbons and Its Application to Autothermic Generators," Inst. Gas Engrs. J. 1, 631-42 (1961) September.

102. Riesz, C. H., Dirksen, H. A., and Kirkpatrick, W. J., "Sulfur Poisoning of Nickel Catalysts." Institute of Gas Technology Research Bulletin No. 10 (1951) September.

103. Riesz, C. H., Dirksen, H. A., and Pleticka, W. J., "Improvement of Nickel Cracking Catalysts." Institute of Gas Technology Research Bulletin No. 20 (1952) October.

104. Riesz, C. H., Lurie, P. C., Tsaros, C. L., and Pettyjohn, E. S., "Pilot Plant Catalytic Gasification of Hydrocarbons." Institute of Gas Technology Research Bulletin No. 6 (1953) July.

105. Societe de Construction d'Appareils pour Gaz a l'Eau et Gaz Industriels, "Catalytic and Continuous Conversion of Gaseous Hydrocarbons." Montrouge, France: The Company, 1956 (In French and English).

106. Societe de Construction d'Appareils pour Gaz a l'Eau et Gaz Industriels, "Catalytic and Continuous Conversion of Gaseous Hydrocarbons." Montrouge, France: The Company, 1960 (In French and English).

107. "This Reforming Process is Different," Chem. Eng. 64, 152, 154 (1957) April.

108. Vane, S. G. and Morris, J. E., "Reflections on the Continuous Catalytic Reforming of Butane by the Otto Process," Inst. Gas Engrs. J. 2, 689-714 (1961) November.

109. Yarze, J. C. and Lockerbie, T. E., "Catalytic Steam Reforming of Light Liquid Hydrocarbons," American Chemical Society, Division of Gas and Fuel Chemistry Preprints, 78-88 (1960) April 5-14.

110. Waterhouse, J., "Meadow Lane Hydrocarbon Reforming Plant," Gas World 161, 132-36 (1965) January 23.

Cyclic Catalytic Reforming or Cracking (No Process Air)

Reference 7

111. Bennett, B. B., "Oil Fuels for Gas Manufacture," J. Inst. Fuel 35, 338-45 (1962) August.

112. Calderwood, G. L., "The 'ONIA-GEGI' Process for Cyclic Catalytic Cracking of Liquid Hydrocarbons," A.G.A. Operating Section Proceedings-1958, CEP-58-11.

113. Deneke, H., "New Working Experience at the Hamelner Segas-Ölspalt Plant," Gas-U. Wasserfach 99, 663-73 (1958) July 11 (In German).

114. Diamond, G. le B., "The West Midlands Approach to the Gasification of Residual Oil," Inst. Gas Engrs. Commun. No. 456. London: The Institution, 1954; Part I, Gas World 140, 1347-49 (1954) November 27; Part II, ibid., 1414-17 (1954) December 4; Part III, ibid. 141, 83-84 (1955) January 1; Coke and Gas 16, 485-90 (1954) December; Part I, Gas J. 280, 531-34 (1954) November 24; Part II, ibid., 671-72 (1954) December 8; Gas Times 81, 328, 331-32, 336-38, 340, 342 (1954) November 26.

115. Dunphy, T. E., "O.N.I.A.-G.E.G.I. Plant in Cork," Inst. Gas Engrs. J. 2, 749-63 (1962) December.

116. Glover, C. B., "New Developments in the U.G.I. Cyclic Catalytic Reforming Process," A.G.A. Proceedings-1955, 829-33.

117. Griggs, E. R., "Paterson Plant Experience with C.C.R.," Gas Age 114, 45-48, 80, 82, 84 (1954) July 15.

118. Horner, G. M., "The Segas Process for the Catalytic Reforming of Hydrocarbons," A.G.A. Proceedings-1956, 465-76.

119. McKean, J. B., "The Production of Town Gas by the Catalytic Gasification of Petroleum Oils," Inst. Petrol. Rev. 11, 90-97 (1957) April.

120. Milbourne, C. G. and Glover, C. B., "Cyclic Catalytic Reforming Process," Ind. Eng. Chem. 49, 387-91 (1957) March.

121. Milbourne, C. G., "Production of Catalytic Oil Gas from Bunker C Oil in the U.G.I. Cyclic Catalytic Reforming Sets," A.G.A. Proceedings-1956, 553-56.

122. Paul, C. and Boutin, J., "Production of Detoxified Town Gas by the Onia-Gegi Process," Compt. Rend. Congr. Ind. Gaz 80, 184-200 (1963) (In French).

123. Reid, J. M. and Mason, D. McA., "Performance of Supported Nickel Catalysts in Cyclic Steam Reforming of Natural Gas," A.G.A. Operating Section Proceedings-1959, CEP-59-3.

124. Robertson, N. J. and Harrison, H. C., "Fuel Oil Gasification by the ONIA-GEGI Process," Gas Times 76, 921-22, 924 (1953) September 18; Gas J. 275, 770-73 (1953) September 23; Gas World 138, 777-79 (1953) September 26.

125. Smoker, E. H., "Experiences in the Production of High Btu Gas from Naphtha and Kerosene Using the UGI Cyclic Catalytic Reforming Process," A.G.A. Proceedings-1953, 852-53.

126. Smoker, E. H., "The UGI Cyclic Catalytic Reforming Process-Recent Developments," A.G.A. Proceedings-1952, 843-44.

127. Societe de Construction d'Appareils pour Gaz a l'Eau et Gaz Industriels, "Catalytic and Cyclic Conversion of Gaseous Hydrocarbons." Montrouge, France: The Company, 1956 (In French and English).

128. Societe de Construction d'Appareils pour Gaz a l'Eau et Gaz Industriels, "Catalytic and Cyclic Gasification of Liquid Hydrocarbons." Montrouge, France: The Company, 1956 (In French and English).

129. Societe de Construction d'Appareils pour Gaz a l'Eau et Gaz Industriels, "Catalytic and Cyclic Conversion of Liquid and Gaseous Hydrocarbons." Montrouge, France: The Company, 1960 (In French and English).

130. Stanier, H. and McKean, J. B., "The Production of Town Gas by the Catalytic Gasification of Petroleum Oils: II. The Development and Operation of a Commercial Plant," Inst. Gas Engrs. Commun. No. 457. London: The Institution, 1954; Part I, Gas World 140, 1344-45 (1954) November 27; Part II, ibid., 1414-17 (1954) December 4; Part III, ibid. 141, 83-84 (1955) January 1; Coke and Gas 16, 485-90 (1954) December; Gas J. 280, 673-74 (1954) December 8; Gas Times 81, 382, 384, 389-92 (1954) December 10; "The Production of Town Gas by the Catalytic Gasification of Petroleum Oils: III. The Development and Operation of a Commercial Plant," Trans. Inst. Gas Engrs. 104, 207-58 (1954-55).

Cyclic Catalytic Reforming or Cracking (With Process Air)

Reference 12

131. Bolzinger, A., "The P-9-Generator for the Production of Town Gas From Light Petroleum Products," Gas-u. Wasserfach 102, 1065-68 (1961) September 29 (In German).

132. "The Cambridge MS Reforming Plant," Coke & Gas 23, 225-31 (1961) June.

133. "The Crewe MS Reforming Plant," Gas World 155, 583-86 (1962) May 12.

134. Francis, S. and Gay, J. D., "The Production of Town Gas from Refinery Products in MS Reforming Plant," Gas World 153, 659-64 (1961) May 13.

135. "The Hurll Catalytic Reforming Plant at Dunedin Works, New Zealand," Gas World 160, 741-44 (1964) December 19/26.

136. Joklik, A., "High Capacity Plants for the Production of Town Gas," Gas, Wasser, Warme 15, 252-63 (1961) December (In German).

137. Joklik, A., "The Research and Process Technology Development for the Practical Application of Natural Gas for Town Gas Production in the Vienna Gasworks," Gas, Wasser, Warme 11, 253-66 (1957) November (In German).

138. Jungbluth, C. and Chabrouty, L., "Cyclic and Catalytic Reforming of Natural Gas in the U.G.I. Lines at Lyon," Compt. Rend. Congr. Ind. Gaz 77, 240-55 (1960) (In French).

139. Osterloh, K. and Walter, E., "Production of Town Gas by the Cyclic Otto-CC3P-Process," Erdol u. Kohle 14, 355-59 (1961) May (In German).

140. Reboul, J. and Pichard, M., "Study and Testing of a Prototype of the Industrial Generator P. 9," Compt. Rend. Congr. Ind. Gaz 77, 149-68 (1960) (In French).

Partial Combustion Processes (With Process Air)

141. Clarke, R. P., "Recent Developments in the Hasche Process," Gas Age 125, 31-32 (1960) June 23.

142. Deanesly, R. M. and Watkins, C. H., "Peak Load Gas Manufacture by Autothermic Cracking," Gas Age 106, 30-33, 53-54 (1950) August 31.

143. Faber, W. F., "The Dayton-Faber Process for the Manufacture of Oil Gas and Reformed Gas with the Use of Oxygen-Enriched-Air," A.G.A. Proceedings-1948, 330-39.

144. Farnsworth, J. F., Bretz, G. M., and McGurl, G. V., "Koppers-Hasche Pilot Plant Producing Natural Gas Substitutes and Low Heating Value Gas," Ind. Eng. Chem. 49, 404-09 (1957) March.

145. Fleming, G. L., "Hydrocarbon Reforming by a New Pyrolytic Process," Chem. Eng. Progr. 52, 249-54 (1956) June.

146. Frink, J., "The Hasche Unit in Florida," A.G.A. Proceedings-1955, 860-64.

147. Maccormac, M., "Production of Peak-Load Gas by the Partial Combustion of Oil," Gas World 128, 890-94 (1948) June 5.

148. McGurl, G. V. and Fleming, G. L., "The Koppers-Hasche Reformer," Gas 31, 59-61 (1955) June.

149. "Operating Experience with H-Fuel," A.G.A. Operating Section Proceedings-1962, CEP-62-4.

150. Papillon, A., "Installation 'GEIM' for the Production of Town Gas Accomplished at the Saint-Brieuc Gasworks in 1946," Compt. Rend. Congr. Ind. Gaz 64, 373-87 (1947) (In French).

151. Prichard, C. R., "Hasche Furnace Operations on 'H' Fuel," A.G.A. Operating Section Proceedings-1960, CEP-60-6; Gas Age 125, 30-31 (1960) June 23.

Partial Combustion Processes (With Process Oxygen)

152. Davis, J. E. and Coote, D. R., "Production of Town Gas from Oil and Hydrocarbon Gases," Trans. World Power Conf., 6th Conf., Melbourne, 1962, 3, 982-97.

153. Eastman, du B., "The Production of Synthesis Gas by Partial Oxidation," World Petrol. Conf. Proc., 5th Congr., New York, 1959, Section IV, 153-61.

154. Eastman, du B., "Synthesis Gas by Partial Oxidation," Ind. Eng. Chem. 48, 1118-22 (1956) July.

155. Gattiker, M., "The Shell Oil Gasification Process and Its Application in Industry," Erdol u. Kohle 10, 581-84 (1957) September (In German).

156. Klinkert, H. G., "Hydrogen from Oil," Chem. & Ind. (London), 1381-85 (1961) September 2.

157. Olson, H. N. and Schneider, P. E., "Synthesis Gas by Texaco Partial Oxidation Process," Paper No. Tech. 60-2 presented at the Southwest Regional Meeting, Western Petroleum Refiners Association, Corpus Christi, Tex., January 27-28, 1960.

158. Osthaus, K. H. and Austin, T. W., "Production of Gas From a Wide Range of Solid and Liquid Feedstocks by the Koppers-Totzek Process," Gas World 157, 98-103 (1963) January 12.

159. Singer, S. C., Jr. and ter Haar, L. W., "Reducing Gases by Partial Oxidation of Hydrocarbons," Chem. Eng. Progr. 57, 68-74 (1961) July.

160. ter Haar, L. W. and Vogel, J. E., "The Shell Gasification Process, A Process for the Preparation of Synthesis Gas from Mineral Oil Products," Gas-u. Wasserfach 105, 612-17 (1964) May 8 (In German).

Gas Processing

161. Benson, H. E., Field, J. H., and Jimeson, R. M., "CO_2 Absorption Employing Hot Potassium Carbonate Solutions," Chem. Eng. Progr. 50, 356-64 (1954) July.

162. Benson, H. E., Field, J. H., and Haynes, W. P., "Improved Process for CO_2 Absorption," Chem. Eng. Progr. 52, 433-38 (1956) October.

163. Bottoms, R. R. (assignor to The Girdler Corp.) "Process for Separating Acidic Gases." U.S. Patent Reissue 18, 958 (1933) September 26 of U.S. Patent 1,783-901 (1930) December 2.

164. Dirksen, H. A., Linden, H. R., and Pettyjohn, E. S., "Autohydrogenation of Oil Gases." Institute of Gas Technology Research Bulletin No. 25 (1955) March.

165. Dirksen, H. A. and Linden, H. R., "Pipeline Gas From Coal By Methanation of Synthesis Gas." Institute of Gas Technology Research Bulletin No. 31 (1963) July.

166. Dirksen, H. A. and Pierson, C. E., "Production of Natural Gas Substitutes by Catalytic Autohydrogenation of High-Btu Oil Gases," A.G.A. Proceedings-1953, 877-91.

167. Egorov, N. N., Dmitriev, M. M., and Zykov, D. D., "Purification of Gases with Ethanolamine Solutions," in "Removal of Sulfur from Coke-Oven and Other Fuel Gases," Chap. XIII, 110-41. Moscow: Metallurgizdat, 1950.

168. Eickmeyer, A. G., "For Bulk Removal of Acid Gases Costs Favor Hot Carbonate Process," Chem. Eng. 65, 113-16 (1958) August 25.

169. Girdler Co., The, "Girdler Stock Catalysts, Experimental Catalysts and Current Literature," Girdler Catalyst Bulletin GC-1256. Louisville, Ky.: The Company, 1956.

170. Habermehl, R. and Atwood, K., "Low Temperature Carbon Monoxide Conversion Catalysts," American Chemical Society Division of Fuel Chemistry Preprints 8, No. 1, 10-20 (1964) April.

171. Hoogendoorn, J. C. and Salomon, J. M., "Sasol: World's Largest Oil-from-Coal Plant," Brit. Chem. Eng. 2, 238-44 (1957) May; ibid. 308-12 (1957) June; ibid. 368-73 (1957) July; ibid. 418-19 (1957) August.

172. Hopton, G. U. and Cooper, L. S., "The I.G.E. and the Development of Gas Purification Processes," Gas and Coke 25, 185-90 (1963) May.

173. Huff, W. J. and Logan, L., "The Purification of Commercial Gases at Elevated Temperatures," A.G.A. Proceedings-1963, 724-59.

174. Katell, S. and Fan, L.-T., "Bibliography of Processes for Removing Hydrogen Sulfide from Industrial Gases; January 1950-December 1957," U.S. Bureau of Mines Inf. Circ. 7886. Washington, D. C.: Govt. Print. Office, 1959.

175. Kohl, A. L., "Selective H_2S Absorption," Petrol. Processing 6, 26-31 (1951) January.

176. Kohl, A. L. and Riesenfeld, F. C., "Gas Purification." New York: McGraw-Hill, 1960.

177. Kohl, A. L. and Riesenfeld, F. C., "Today's Processes for Gas Purification," Chem. Eng. 66, 127-78 (1959) June 15.

178. Linton, J. A. and Tisdall, G. C., "Commercial Production of Synthesis Gas from Low Grade Coal," Coke and Gas 19, 402-07 (1957) October; ibid. 442-47 (1957) November; ibid. 20, 148-52, 159 (1958) April.

179. Lovy, P., "Production of Second-Family Gas by Means of Semi-Industrial Generator P 12. Experimentation with Light Petroleum Distillates," Compt. Rend. Congr. Ind. Gaz 79, 222-43 (1962) (In French).

180. Miller, F. E. and Kohl, A. L., "Results of Commercial Tests of Selective H_2S Absorbent," Gas 29, 101, 104-06 (1953) September.

181. Mills, C. E. and Johnson, E., "The Removal of Organic Sulfur Compounds from Town Gas," Inst. Gas Engrs. J. 2, 664-79 (1962) October.

182. Nonhebel, G., "Gas Purification Processes." London: George Newnes Ltd., 1964.

183. "Progress in the Development of Processes for the Liquid Removal of Hydrogen Sulphide," Gas World 158, 822, 826-27, 829-31 (1963) December 21/28.

184. Sands, A. E. and Schmidt, L. D., "Recovery of Sulfur from Synthesis Gas," Ind. Eng. Chem. 42, 2277-87 (1950) November.

185. Sands, A. E., Wainwright, H. W., and Egleson, G. C., "Organic Sulfur in Synthesis Gas: Occurrence, Determination and Removal," U.S. Bureau of Mines Rept. Invest. 4699. Pittsburgh: The Bureau, 1950; A.G.A. Proceedings-1950, 564-602.

186. Wenzell, L. P., Jr., Dressler, R. G., and Batchelder, H. R., "Plant Purification of Synthesis Gas," Ind. Eng. Chem. 46, 858-62 (1954) May.