A NOVEL AIR ELECTRODE

H. P. Landi, J. D. Voorhies, W. A. Barber

Stamford Research Laboratories
American Cyanamid Company
Stamford, Connecticut

Gas diffusion electrodes suitable for use as air cathodes are a necessary component for most practical fuel cells and metal-air batteries. The general requirements of air cathodes are similar to those for other gas diffusion electrodes, namely, an optimum contact of reactant gas, electrolyte and electrode reaction sites for minimum electrode polarization. The cathodic reduction of oxygen in air, however, is impaired by the initial dilution of reactant oxygen with inert nitrogen and the tendency for nitrogen to remain in the electrode structure and thereby increase the dilution effect during cathodic discharge.

In practice, air electrodes are used in contact with free liquid electrolyte or with electrolyte confined within a solid or semisolid matrix. Electrodes designed for matrix use such as thin screen supported electrodes (1,2) are generally not applicable to free liquid electrolyte cells because of excessive macroporosity. They can, however, be adapted to such use by application of a microporous, hydrophobic backing.

Several gas electrode structures have been described (1-6) which satisfy most of the requirements for air. Clark, Darland and Kordesch (3) have described a multilayer, graded porosity electrode based on carbon which is suitable as an air cathode in alkaline electrolyte. Paper fuel cell electrodes (6), while simple, flexible and strong, are too grossly porous to use in a free electrolyte cell.

The air cathode described in this paper has a combination of pore structure and controlled hydrophobicity which make it suitable for use in free liquid electrolyte or matrix-electrolyte cells. The basic carbon filled sheet is thin, strong, flexible and conductive and can be manufactured uniformly and economically on a large scale.

Description of Electrodes

The new electrode, designated Type E, is fabricated with conventional plastics processing equipment. A thermoplastic molding compound is blended vigorously with polytetrafluoroethylene (PTFE) latex and a graphitic carbon or metallized, graphitic carbon filler. During the blending process, long fibers of PTFE are drawn throughout the plastic mass to form an interconnected network which enmeshes the filler particles. This blend is molded into a flat sheet, and the thermoplastic is then extracted leaving a cohesive sheet of graphitic carbon catalyst bonded by PTFE fibers. This process is versatile and allows for variations in temperature, filler type, PTFE level and the addition of other ingredients to add special properties to the finished sheet. Figure 1 shows a surface replica photomicrograph of the Type E sheet.

Most PTFE bonded gas electrodes contain 10 to 30% PTFE for the combined function of mechanical bonding and "wetproofing" or gas-electrolyte interface control. A novel feature of the Type E electrode is the very low level, in the range of 2 to 8% PTFE, which is capable of performing this dual function effectively. An obvious advantage of this low PTFE level is the very high percentage of conductive and catalytic components which can be incorporated into a highly porous structure.

The physical properties of typical Type E electrode sheets made in this manner are shown below.

Table I

Properties of Type E Sheet

Composition	95% graphitic carbon, 5% PTFE
Thickness	0.02 inch
Pore Volume	65%
Pore Distribution*	67% (0.1-1 μ) 15% (1-10 μ) 10% (> 10 μ)
Tensile Strength	100 psi
Tensile Modulus of Elasticity	9000 psi
Resistivity (Dry)**	50 ohms per square
Air Permeability	$1.1 \frac{cc}{cm^2 \times min \times mm\ Hg}$

* By mercury porosimeter (volume % distribution).
** Measured with contacts along opposite sides of a one-inch square (50 pounds on contact).

A highly effective convected air cathode is fabricated by laminating two thin (0.005 to 0.010 inch) sheets of Type E electrode onto both sides of an open mesh expanded nickel screen with moderate heat and pressure. The sheet facing the electrolyte in a cell is catalyzed while the side facing the ambient air is an uncatalyzed, highly porous, graphitic carbon layer of the same type. This structure is referred to as ESE (S for screen).

Catalyzation of the Electrode

The carbon-PTFE sheet functions well as an oxygen or air electrode in alkaline electrolyte without additional catalyst, but in most cases it will be desirable to incorporate a catalyst metal in the structure. This can be done by blending a precatalyzed carbon into the structure instead of the uncatalyzed carbons. Catalysts such as platinum, silver and silver-palladium alloy will be described. Or, the catalyst can be applied after fabrication of the Type E sheet by any of several chemical or thermal-chemical means.

An example of a post platinization technique is impregnation with chloroplatinic acid followed by reduction with dry hydrogen at 200-225°C. High temperatures should be avoided, however, to prevent distortion of the sheet near the softening point of PTFE.

Electrochemical Measurements

Two kinds of current-potential measurement have been made on Type E air cathodes: (1) hydrogen-air matrix cell measurements in acid and alkaline electrolyte with a standardized hydrogen counter electrode and (2) half cell measurements on the ESE structure in free 6N KOH with naturally convected air. The hydrogen-air matrix cell shown in Figure 2 is used for terminal voltage-current density measurements which reflect the air cathode activity. In this test, Type E electrodes are compared with Cyanamid PTFE bonded, thin screen electrodes (1) designated Type B for graphitic carbon supported platinum and Type A for platinum black.

The half cell air cathode measurements are made in a cell shown in Figure 3. The electrodes are vertically oriented and exposed to the ambient air. A controlled current is applied to the cell such that the counter anode, which can be another ESE electrode, evolves oxygen, and air is reduced at the working cathode. The cathode potential is measured with respect to an Hg/HgO/6 N KOH reference electrode through

a Luggin capillary. The reference is calibrated occasionally with respect to the hydrogen-platinum black electrode in the same solution. The measured potential of H_2(Pt)/6N KOH/HgO/Hg is 0.93 V at 25°C.

Because of a rather slow attainment of the steady state cathode polarization at a given current density with naturally convected air at room temperature, a cathodic preconditioning is required for meaningful results. The procedure used is to predischarge the air cathode for about 25 minutes at 50 mA/cm² before measuring the polarization curve. The polarization values are then measured after three-minute equilibration at each current density. The details of the transient response of dry, untested electrodes will be discussed further in the RESULTS section.

RESULTS AND DISCUSSION

Matrix Cell-Acid and Alkaline Electrolyte

The polarization of Types A, B and E air cathodes at room temperature and 70°C in 5N H_2SO_4 is shown in Figure 4. The Type E cathode containing 1.9 mg/cm² platinum is essentially equivalent to a Type B screen electrode at 2.5 mg/cm² platinum. For comparison, air data obtained with a Type A cathode at 9 mg/cm² platinum black are also shown.

In Figure 5 is shown the matrix fuel cell air performance of the same Type E cathode compared with a similar Type B on nickel screen in 5N KOH. Again the results are about equivalent. A limiting current region is apparent for these electrodes in base, but Type E is no worse than Type B in this respect. Neither type shows a limiting current in acid electrolyte over the same current range investigated in base.

Convected Air - 6N KOH, 25°C

The average steady state electrochemical performance in a free electrolyte cell of ESE type air cathodes with various metal catalysts supported on graphitic carbons is shown in Table II. The cited half cell measurements were obtained in the free electrolyte cell described previously. Low level platinum is an excellent catalyst and is stable in alkaline electrolyte for long periods under various load conditions. Silver is known to be a good catalyst for oxygen reduction but is slightly soluble in alkaline electrolyte and is degraded by repetitive changes in current density. The silver-palladium alloy is an example of a group of binary alloys with silver which represent improvements over silver in steady state performance and stability to cyclic current changes.

Platinum catalysts have been applied at several loadings by chemical or thermal-chemical deposition before or after fabrication of the Type E sheet. The results in Table III show an apparent insensitivity to catalyst loading and a slight bias to post-platinization as the best method of catalyst application. It is possible that the real utilization of catalyst surface is relatively poor and that concentration and ohmic polarization within the electrode structure dominate the cathodic activity of these electrodes.

The two structural features of ESE electrodes which are most important for convected air cathode performance are the thickness of the catalyzed E layer and the distribution of polyfluorocarbon throughout the electrode. These effects are seen in Table IV. As one would expect, polarization is decreased by reducing the thickness of the catalyst layer thereby concentrating the electrocatalyst in the current producing regions of the cathode. The lower limit of thickness is controlled primarily by fabrication considerations particularly the low cohesive strength of thin Type E layers.

Table II

Convected Air Electrode Polarization

Electrode	Catalyst Loading (mg/cm²)	$-E_{c(air)}$ (Volts vs. Hg/HgO/6N KOH) 25°C 10	20	50	100 mA/cm²
95% Pre-Platinized ACCO* Graphite	1.1 Pt	.03	.06	.12	.21
95% ACCO Graphite Post-Silverized	9 Ag	.12	.17	.25	.35
95% ACCO Graphite Post-Catalyzed 75-25, Ag-Pd	13 Ag-Pd	.04	.08	.17	.23
95% ACCO Graphite Uncatalyzed	0	.20	.28	.40	.50
92% Darco G-60 Carbon Uncatalyzed	0	.15	.17	.22	.28

Table III

Platinum Level and Method of Catalyzation

Catalyst	Loading (mg/cm²)	$-E_{air}$ (V. vs. Hg/HgO/6N KOH) @ 50	100 mA/cm² (25°C)	No. of Measurements
Post-Platinized (Method 1)	0.60	.13	.21	1
Post-Platinized (Method 2)	0.65	.13	.21	1
Post-Platinized (Method 3)	0.6	.13	.21	3
Pre-Platinized	1.1	.12	.21	6 (3 electrodes)
Pre-Platinized	2.5	.11	.19	5 (3 electrodes)

* A graphitized carbon from American Cyanamid Company (1).

Table IV

Effects of Thickness and Composition - Pre-Platinized ESE Electrodes (2.5 mg/cm² Pt)

	$-E_{air}$ (V. vs. Hg/HgO/6N KOH)	
	50	100 mA/cm²
1. Thickness of platinized E layer		
.017 inch	.23	.38
.007 inch	.11	.19
2. Polyhalocarbon content of platinized E layer. (E backing layer - 2.5% PTFE, 2.5% Kel-F)		
4% PTFE	.14	.37
4% PTFE, 4% Kel-F	.11	.19
15% PTFE	.18	.37
3. Polyhalocarbon content of E backing layer (platinized E layer - 4% PTFE, 4% Kel F)		
25% PTFE, 25% Kel-F	.11	.36
20% PTFE	.17	.28
13% PTFE	.12	.22
2.5% PTFE, 2.5% Kel-F	.11	.19

The distribution of polyfluorocarbon in both the catalyst and backing layers is also of critical importance. In the platinized E layer this is probably a matter of a critical balance between the amounts of air and electrolyte in the structure. The sensitivity of ESE air cathodes to the polyfluorocarbon level in the backing layer is somewhat unexpected. It would appear that a relatively low level of wetproofing is necessary in the backing to bring the cathode reaction zone closer to the centrally located screen by virtue of deep electrolyte penetration. This in turn reduces the electronic conductive path to the collector screen thereby decreasing the measured half cell cathode polarization.

Transient Response

The ESE air cathode operating on convected air at room temperature with alkaline electrolyte exhibits large transients in cathode potential after instantaneous changes in current density under certain conditions. The most dramatic transient is that observed upon changing the current density from zero to a value in the range 50 to 200 mA/cm² for a cathode which has not been tested previously or preconditioned in any way. Such a transient for a 0 to 50 mA/cm² change is shown in Figure 6. Similar transients are observed for platinum-carbon, silver-carbon and carbon catalysts.

The total transient for platinum-carbon is characterized by a short term (1 to 2 minutes) and long term (2 to 20 minutes) portion. The largest part of the total transient is apparently associated with optimal wetting of the electrode structure. This occurs at open circuit and perhaps in a more significant way after application of the current. It is also likely that some of the transient is caused by cathodic catalyst activation and perhaps by rearrangement of sorbed oxygen. In the case of silver on graphitic carbon, the increase in cathode potential with time is more gradual and the time to achieve a steady state value is longer than for platinum.

There are three pretreatments which can alone or in combinations remove most of the transient for platinum-carbon: (1) presoaking in water or electrolyte for more than one hour, (2) a 25 minute precathodization in 6N KOH at 50 mA/cm^2 with air (O_2 reduction region) and (3) one or more polarization tests followed by rinsing and air drying the cathode. The fact that treatment (3) is effective in reducing the transient by up to 50% for a period of at least several days suggests the possibility of a short term irreversible activation of the catalyst.

The transient response appears to be partly associated with the cell design but independent of the feed of oxygen (air). Type E electrodes assembled in matrix fuel cells show almost no transient with flowing air, room temperature, 6N KOH. The same electrodes show a pronounced transient when assembled in a free electrolyte cell under the same conditions and with flowing air.

SUMMARY

A novel air cathode for matrix and free electrolyte type fuel cells and metal-air batteries has been described. The basic and novel component of this electrode is a thin, strong, flexible, electrically conductive sheet containing interconnected polytetrafluoroethylene fibers which bind the conductive and catalytic components into a cohesive structure. This structure is particularly suitable for use with convected air. The problem of large cathode potential transients upon first application of a moderate discharge current arises from a combination of slow wetting and catalyst activation.

ACKNOWLEDGMENT

The authors wish to acknowledge the contributions of H. P. Ledden, S. Arcano, J. Durkin and E. A. Battistelli to the experimental phase of this work and of R. G. Haldeman in useful discussions on the fabrication and mechanism of air cathodes.

REFERENCES

1. R. G. Haldeman, W. P. Colman, S. H. Langer and W. A. Barber, "Advances in Chemistry," Vol. 47, "Fuel Cell Systems," p. 106 American Chemical Society, Washington, D. C. (1965).

2. L. W. Niedrach and H. R. Alford, J. Electrochem. Soc., 112, 117 (1965).

3. M. B. Clark, W. G. Darland and K. V. Kordesch, Electrochem. Tech., 3, 166 (1965).

4. E. W. Justi and A. W. Winsel, "Kalte Verbrennung" Fuel Cells, Steiner Verlag, Weisbaden (1962).

5. A. M. Adams, F. T. Bacon and R. G. H. Watson in "Fuel Cells," Chemical Technology, Vol. 1, Will Mitchell ed. p. 129 (1963).

6. W. A. Barber and N. T. Woodberry, Electrochem. Tech., 3, 194 (1965).

Fig. 1. SURFACE REPLICA PHOTOMICROGRAPH OF TYPE E ELECTRODE

A: PTFE FIBERS
B: ACCO GRAPHITIC CARBON PARTICLES

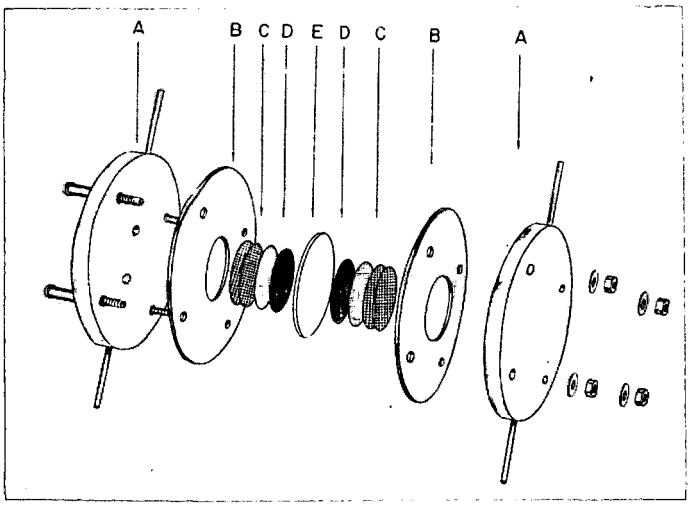

Fig. 2. MATRIX CELL

A. FACE PLATES
B. GASKETS
C. COLLECTOR SCREENS
D. ELECTRODES
E. MATRIX

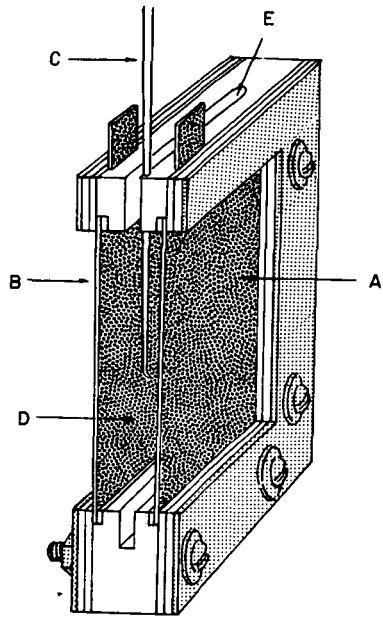

Fig: 3. AIR ELECTRODE TEST CELL

A: CONVECTED AIR ELECTRODE
B: COUNTER ELECTRODE
C: REFERENCE PROBE (6 N KOH)
D: FREE ELECTROLYTE CHAMBER
E: SLOT FOR ZINC ANODE

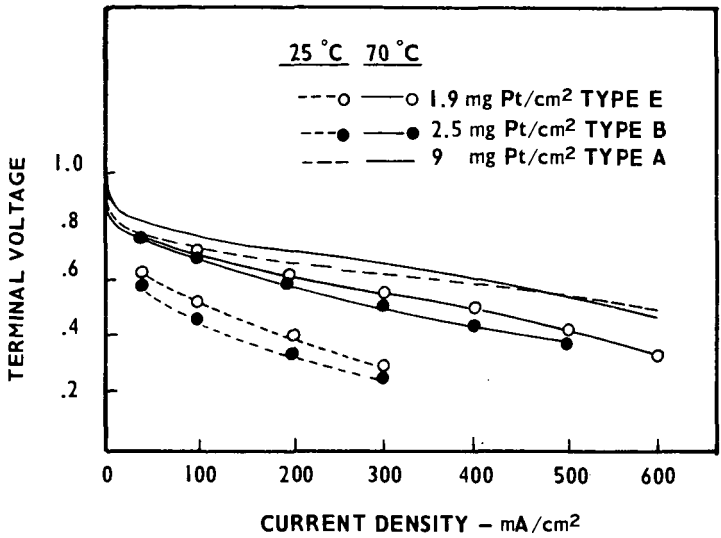

FIG. 4: CURRENT–VOLTAGE CURVES – HYDROGEN/5 N H_2SO_4/ AIR, @ 25°C AND 70°C

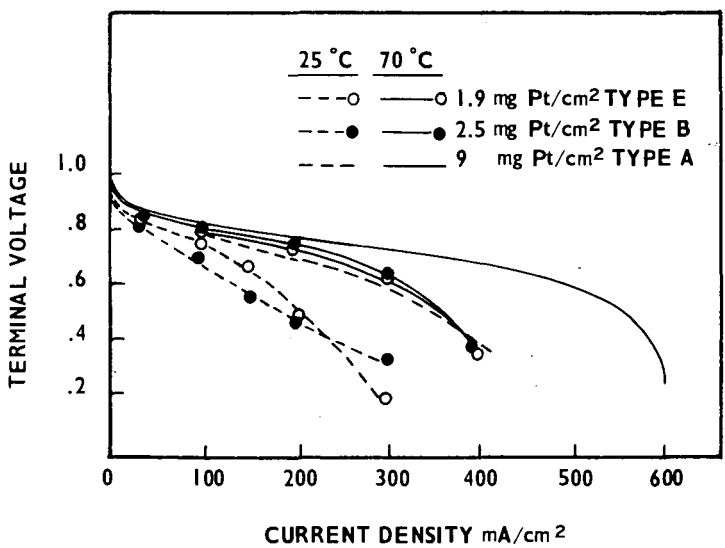

FIG. 5: CURRENT–VOLTAGE CURVES – HYDROGEN/5 N KOH/AIR @ 25°C AND 70° C
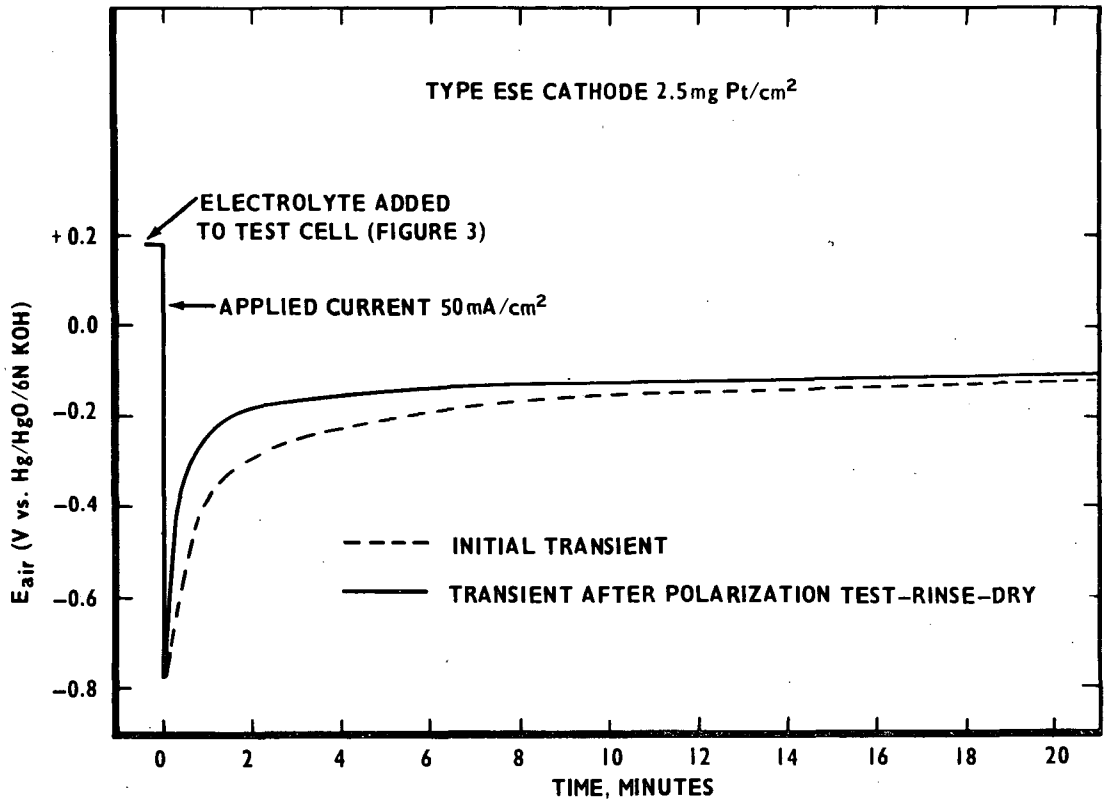
FIGURE 6: AIR CATHODE TRANSIENTS – 6N KOH, 25 °C