SMALL SIZE LIQUID FUEL AIR AND ZINC AIR PRIMARY CELLS

W. Vielstich and U. Vogel

Institut für Physikalische Chemie der Universität Bonn

Introduction

A special feature of liquid fuels is the high A-h-capacity per unit volume and per unit weight. As an exemple one has 5.000 A-h per liter methanol and a capacity as high as 1.000 A-h per liter in a 6.2 M methanol solution. This compact form of stored energy offers the possibility to use such liquid fuels not only in continuouly operating fuel cells but in primary type cells also. Convenient is the practice to combine a fuel electrode with a hydrophobic air electrode operating at ambient temperature and pressure. The A-h-capacity of such a cell is given by the volume of the added fuel electrolyte mixture. In opposite to commercial primary cells liquid fuel air cells can be reactivated after discharge by renewing the fuel electrolyte mixture (1, 2).

Cells of this type have already been constructed and field tested for several practical applications. 60 W methanol air batteries have been used to power flashing bouys. With 400 liters fuel electrolyte mixture a signal device was sucessfully operated for more than one year (2). Another 40 W battery has been used in actual service to power a TV relay station in Switzerland. This station was positioned in 7.000 ft. altitude where the outside temperature dropped below - 22°F during winter time. At these extreme working conditions also the rated 40 W could be obtained because of the selected methanol/formate fuel mixture (3, 4, 5).

For the above mentioned applications current densities of several mA/cm^2 are feasable. In the meantime, the performance of the hydrophobic carbon diffusion electrode used so far has been increased by more than one order of magnitude in current density. With this new air electrode an extended field of application was discovered. Small cells, e.g. in form of a D-size cell, can now be constructed on the basis of methanol/air or formate/air. In comparison to commercial cells these new electrical power sources have a higher A-h-rate and can be recharged several times. In the following a description of these cells and experimental data are given. Possible low power applications, especially for transistorized equipment are discussed.

Cell Construction

The basic construction scheme of a liquid fuel air cell is shown in fig. 1. The D-size cell has a metal housing (stainless steel). The fuel electrode is pressed against the wall of the housing by a perforated nickel screen. The fuel electrode consists of a sintered nickel foil with a platinum metal catalysts. 1-5 mg/cm^2 are electro-plated from a standard commercial solution of platinum/palladium. The noble metals are deposited in a ratio of Pd:Pt = 4:1 up to 9:1 (compare ref. 5). The carbon oxygen electrode is fixed in the cap of the cell. The carbon rod has a channel in the center to favour the oxygen diffusion to and the nitrogen transfer from the reaction zone. The active carbon

material is bounded by polyethylen which serves as hydrophobic agent also. The content of polyethylen ranges from 10 to 20 %, depending on the character of the solution, e.g. content of methanol. A silver plated nickel grid around the carbon rod serves as current collector. The electrical connections are given by the spring contact on the plastic cap (positive pole) and the metal housing (negative pole).

The cell can be filled with 20 - 24 cm^3 fuel electrolyte mixture through two openings in the cap. The A-h-capacity of the cell depends on the fuel concentration and on the fuel mixture used: 7.5 M KOH + 5 M formate ..... 5.5 - 6.5 A-h
9 M KOH + 4 M methanol ..... 13 - 15.5 A-h

In the alkaline electrolyte, methanol and formate are both converted completely to carbonate ions. In the reaction with methanol 2 OH^- ions are consumed and 6 electrons are delivered per molecule. In the case of formate only one OH^- ion is used for the conversion and two electrons are delivered.

For a D-size dry cell ampere-hour values of about 3 are obtained at low current densities. We have also built cells with a plastic housing. In this construction the negative pole is situated at the bottom of the housing. Fig. 2 shows two types of the D-size alcohol/air element and a plastic spare tube for refill.

The principle of a free liquid electrolyte and a carbon air diffusion electrode can be used in combination with a consumable metal electrode as negative pole also. The liquid fuel and the fuel electrode than are replaced by a zinc or cadmium anode (in form of a foil or a powder). Such a metal air cell has the advantage of a higher operating voltage (1.0 to 1.2 volts). Current loads of 100 - 300 mA easily can be obtained. The A-h-capacity depends to a large extent on the concentration and on the volume of the electrolyte. To avoid heavy corrosion effects at the anode ZnO has to be added to the electrolyte of the zinc air cells. In opposite to commercial dry cells such a zinc air cell can be reused. This can be done by renewing the electrolyte. The number of cycles is determined by the weight of the zinc electrode and the current efficiency.

Experimental Results

In fig. 3 the discharge curves of formate and zinc/air cells are compared with that of a commercial dry cell. In the first part of the curve the dry cell shows a relatively high operating voltage. But the output is decreasing almost linearly with time. By the use of zinc and formate air cells very constant terminal voltages are obtained over the whole discharge period. Forthermore the A-h-capacity of the new air cells obviously exceeds that of the dry cell, weight and volume being almost the same.

At low temperatures (- 15°C) a small decrease in performance only is observed for all cells investigated (fig. 4). The cells with liquid electrolyte again show a much better voltage time behaviour. Current efficiencies of 90 - 97 % for formate and 80 - 90 % for methanol have been obtained. The A-h-efficiency depends of course on the load and on the temperature.

For some applications it is advisable to use methanol/formate mixtures as it has been done in a battery set for signal devices (3, 4, 5). Such a mixture offers a heavy load performance (due to the added formate) combined with a big A-h-capacity (depending on the methanol content).

Discussion of Applications

The simple construction and the maintenance-free operation of liquid fuel air cells clearly suggest a similar field of application as in the case of dry cells. The features of the new battery are: easy reactivation, constant discharge voltage, unlimited storage, and high A-h-capacity. Therefore, many applications are possible in spite of the relatively low terminal voltage.

The operating voltage can be increased by use of an DC-DC-converter. By suitable adjustment of the converter elements it is possible to operate even with input voltages of 0.5 - 0.7 volts. We have built DC-DC-converters of 0.6 to 6 volts with current outputs of 10 - 30 mA which have more than 60 % efficiency. The converter can be placed in the battery housing, e.g. in the cap. Weight and volume of a power set are diminished by such a combination of primary cell and converter. In some cases it will be advantageous to connect two cells in series in order to obtain better converter efficiencies.

According to the specific qualities described the new power source can find the following applications:

(i) portable transistor radios, tape recorders, walkie-talkie-sets

(ii) equipments which require a constant discharge voltage, e.g. electric clocks

(iii) everywhere, if an unlimited storage is required. In this case the cell could be stored without electrolyte.

Literature

1. W. Vielstich, "Brennstoffelemente - Moderne Verfahren zur elektrochemischen Energiegewinnung", Verlag Chemie, Weinheim, 1965

2. W. Vielstich, "Alcohol-Air Fuel Cells - Development and Applications", in B.S. Baker, Hydrocarbon Fuel Cell Technology, Acad. Press Inc., New York, 1965, p. 79

3. Funkschau 38, 138, 1966

4. H.G. Plust, Brown, Boveri, Mitt. 53, 5, 1966

5. H. Schmidt und W. Vielstich, Z. anal. Chem. 224, 84, 1967

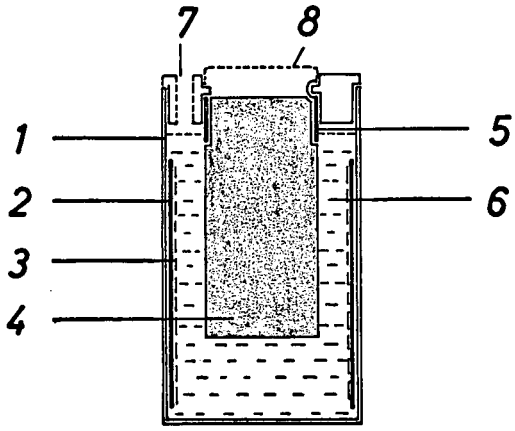

Fig. 1 Liquid fuel air cell cross section
(1) metal housing
(2) fuel electrode
(3) perforated nickel screen
(4) carbon air electrode
(5) silver plated nickel grid
(6) electrolyte
(7) opening
(8) positive terminal

Fig. 2 View of two liquid fuel air cells and of a D-size dry cell
left: plastic housing,
right: metal housing
in front: plastic spare tube with 20 cm^3 fuel/electrolyte mixture

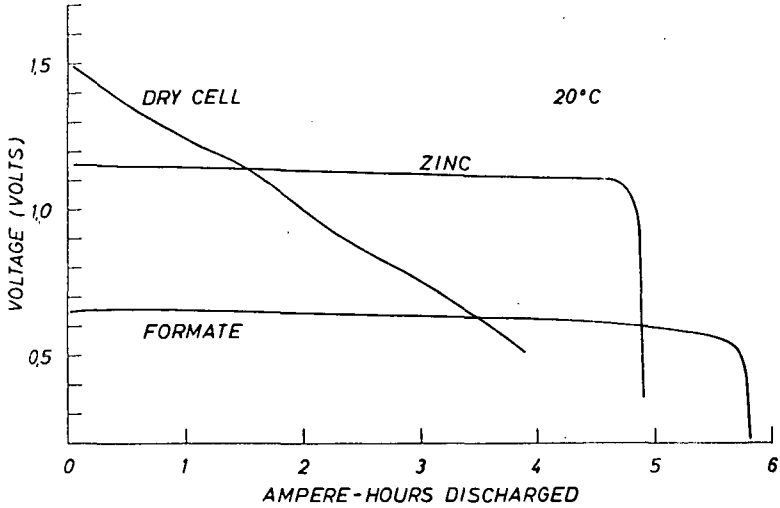

Fig. 3 Discharge voltages of different cells at 20°C;
dry cell: 1,5 V IEC R 20 current 150 mA,
zinc: commercial zinc sheet/carbon air
10 M KOH + 36 g ZnO per litre current 150 mA,
formate: formate/carbon air fuel cell
7.5 M KOH + 5 M HCOOK third charge current 75 mA

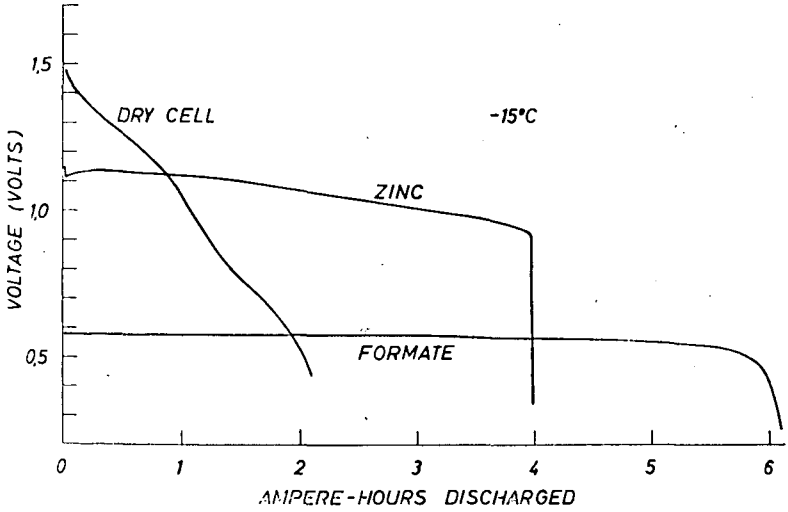

Fig. 4 Discharge voltages as in fig. 3, but - 15°C and 100 mA (dry cell and zinc), 25 mA (formate)