FLUID-BED GASIFICATION OF PITTSBURGH-SEAM COAL WITH OXYGEN AND WITH AIR

A. J. Forney, R. F. Kenny, and J. H. Field

U. S. Bureau of Mines, Pittsburgh Coal Research Center
4800 Forbes Avenue, Pittsburgh, Pennsylvania 15213

Introduction

Most processes for producing either high-Btu gas or gasoline from coal include a gasification step to make hydrogen or synthesis gas. For high-Btu gas or gasoline pressure gasification is preferred because of its greater yield of methane and higher rate of gasification. The fluid-bed gasification system has the advantage over other systems of better control, better heat transfer, faster reaction time, and the utilization of fine coals. However, oxygen is an expensive item in the process. If air can be substituted for oxygen, significant savings in coal conversion costs may be realized. Some experimenters have operated gasifiers without oxygen: The British with the ICI moving burden technique (7)[1], the Australians with a similar system except for the substitution of sand for the hot ash (1), Consolidation Coal with the CO_2-acceptor process (2), Rummel with the slag bath (8), and Kellogg with a molten salt bath (6). The Bureau of Mines is now trying steam plus oxygen in gasification of coal under pressure and steam plus air at pressures below 7 atmospheres.

Pressure Gasification

The Bureau's work in fluidized gasification has been directed mainly to gasifying caking coals, specifically Pittsburgh-seam coal (3). The first system tried involved two fluid beds in series (figure 1)--the first pretreating the raw coal at about 400° C with steam plus air or oxygen; the second gasifying the coal plus the gases and tars with additional steam and oxygen at 850° to 900° C. Due to the cocurrent flow in the two reactors, the methane yield was less than expected. In the second system tried (figure 2) the coal, 70 pct through 200 mesh, was fed into the top of the reactor where it dropped through the pretreating oxygen and steam which mixed with the rising gases from a 3-inch-diameter fluid-bed gasifier. Again the pretreating-carbonizing section was operated at 400° C and the gasifier at 900° C. At 20 atmospheres pressure the gas production was 28 SCF/lb coal, the dry gas composition approximately 36 pct H_2, 19 pct CO, 31 pct CO_2, and 14 pct CH_4, with traces of C_2H_6 and C_3H_8. The throughput of the gasifier was 140 lb/hr-sq ft. This high methane yield (14 pct) means that in the production of high-Btu gas from gasification plus methanation, as much methane can be made in the gasification as in the methanation.

---

[1] Underlined numbers in parentheses in the text indicate items in the list of references at the end of this paper.

By increasing the pressure of the gasifier to 40 atmospheres, we estimate that we can reduce the cost of the high-Btu gas about 5¢/1,000 SCF. This 40-atmosphere gasifier is now under construction.

Since almost one-third of the cost of high-Btu gas from gasification plus methanation is due to the cost of oxygen, we have also undertaken to develope a system in which air is substituted for oxygen.

Atmospheric Gasification With Steam Plus Air

A sketch of the apparatus is shown in figure 3, and a photograph of the unit is shown in figure 4. The concept is to feed air and steam through separate ports into a fluid-bed gasifier. The 8-inch diameter by 5-foot high reactor is baffled so the products of combustion can be separated from the products of steam gasification. The system is based on the flow characteristics of a fluidized bed; namely, that while the solids mix thoroughly, the upward flowing gases have little lateral motion. Thus it is possible to keep two dissimilar gas streams separate in a fluid bed (4, 5). The bottom of the reactor is not baffled for the first foot of reactor height; above that a solid baffle is used. The coal, which has been pretreated in a combined entrained and free-fall section, drops into the steam side of the gasifier so that its carbonization gases will be part of the product stream. Figure 5 shows a flowsheet of the system.

The gas produced at present indicates that the gas streams can be kept partially isolated. The gas produced is not suitable for high-Btu gas as the nitrogen content--14-20 pct--is too high. It could, however, be used as a synthesis gas in making liquid fuels, ammonia, or as a rich producer gas. Analyses of the product and combustion gases, and the temperature profile on the air-coal and the steam-coal side are shown in table 1. The process is equally applicable to both caking and non-caking coals. With caking coal, such as our Pittsburgh-seam, pretreatment with steam and oxygen was included in our experiments, but this should not be considered an essential part of the process.

At total flows of 90 cu ft/hr of steam and 60 cu ft/hr of air, and at coal feed rates of 3 lb/hr, the least nitrogen in the product stream is 14 pct (test 14-3). The flows are regulated by controlling the quantity of combustion product gas leaving the combustion side. Any gas in excess of the set flow passes through the back pressure regulator on the product gas side. The nitrogen percentage is recorded by an on-stream chromatograph on the product side and the controller varied to keep it to a minimum. The composition of the two gas streams thus depend both on the efficiency of the baffle configuration and on the setting of the flow controller on the combustion side.

Temperature profiles (test 12-5) show 905° C on the combustion side compared with 870° C on the product side at the level 19 inches above the base of the reactor. Since the electric heaters which heat up the reactor shut off at temperatures exceeding 800° C, these temperatures indicate good solids mixing and heat transfer from the combustion side to the product side.

TABLE 1.- Tests in a fluid-bed gasifier using air in place of oxygen

Test No.	11-6	12-5	14-3	14-9	15-9	17-2
Coal feed, lb/hr	2.8	3.0	3.18	3.18	3.08	3.86
Steam, SCF/lb	30	30	30	30	30	20
Air, SCF/lb	20	20	20	20	20	20
Pretreater oxygen, SCF/lb	1	1	1	1	1	1
Pretreater steam, SCF/lb	5	5	5	5	5	5
Pressure, atm	2.5	2.5	4	4	4	4
Combustion side temperature, °C:						
2 in. from base	970	880	780	945	760	760
11 in. from base	830	920	900	935	880	900
19 in. from base	840	905	880	940	882	900
31 in. from base	725	740	710	760	740	700
Product side temperature, °C:						
2 in. from base	772	480	443	425	410	440
11 in. from base	825	821	850	640	740	860
19 in. from base	835	870	850	890	850	885
31 in. from base	715	710	680	790	720	690
Product gas analysis, pct:						
H_2	35	43	45	38	43	35
N_2	28	22	14	27	19	34
CO	9	12	12	11	13	13
CH_4	7	6	10	7	9	3
C_2+	4	3	2	1	1	1
CO_2	17	14	17	16	15	14
Heating value, Btu/cu ft	284	292	322	246	290	203
Combustion gas analysis, pct:						
H_2	14	5	13	12	8	9
N_2	62	74	62	62	71	71
CO	8	8	9	12	8	7
CH_4	1	1	2	1	--	--
CO_2	15	12	14	13	13	13
Heating value, Btu/cu ft	78	51	91	88	50	50
Yield product gas, SCF/lb	14	17	10	20	15	16
Yield combustion gas, SCF/lb	20	20	26	20	19	15
Total yield,[1] SCF/lb	13	14	13	16	14	10
$\frac{\text{Product gas } H_2+CO+HC}{\text{Total } H_2+CO+HC}$, pct	63	79	54	69	79	80
Pct HV in product gas	72	85	58	74	82	80
Carbon conversion, pct	60	56	50	50	52	--

[1] H_2+CO+HC.

Analyses of gas made on the product side indicate a maximum of 322 Btu/cu ft or twice the producer gas value, and analyses of gas made on the combustion side, 50 to 90 Btu. A maximum of 79 pct of the H_2+CO+HC, made in the reactor, is on the product side; a maximum of 85 pct of the heating value is on the product side. The large percentage of CO on the combustion side probably results from CO_2 from coal-air combustion reacting with hot carbon. As is seen in table 1, the CO on the combustion side is almost as great as on the product side. When the steam flow was lowered from 30 to 20 cu ft/lb coal feed, the percentage nitrogen increased considerably (17-2) to 34 pct. Further tests are being made to try to lower this nitrogen concentration.

The scheme shown in figure 6 will be tested in the future. This design may not give as good gas separation as the first design, but with air in the annulus, it should give better heat transfer.

Conclusion

Pittsburgh-seam coal can be gasified satisfactorily in a free-fall, fluid-bed reactor to give a product gas of high methane content--20 pct (on a CO_2-free basis). This yield of methane means that in the production of a high-Btu gas from gasification plus methanation as much methane can be made in the gasification as in the methanation step.

Substituting air for oxygen, we tried to operate a fluid-bed gasifier to separate the products of combustion from the products of steam-coal gasification, and also to achieve good heat transfer of the solids. The product gas contained a minimum of 14 pct nitrogen, and temperature profiles showed good heat transfer. This gas is not satisfactory for a 900-Btu gas which would need to contain less nitrogen. However, it could be used for synthesis of liquid fuels, ammonia, or as a rich producer gas, and improved design and operation may lower the nitrogen content of the product gas so that a high-Btu gas may be possible.

References

1. Bowling, K. CSIRO, Australia. Personal communication.

2. Curran, G.P., C.H. Rice, and E. Gorin. Carbon Dioxide Acceptor Gasification Process. Division of Fuel Chemistry, Am. Chem. Soc., Philadelphia, Pa., April 5-10, 1964.

3. Forney, A.J., R.F. Kenny, and J.H. Field. Gasification of Caking Coal in a Free-Fall, Fluid-Bed Reactor. Division of Fuel Chemistry, Am. Chem. Soc., Chicago, Ill., Sept. 10-15, 1967.

4. Munday, J.C. Conversion Processes in the Presence of a Dense Turbulent Body of Finely Divided Solid Material. U.S. Patent 2,468,508, April 26, 1949.

5. Othmer, Donald F. Fluidization. Reinhold Publishing Co., New York, N.Y., 1956, 231 pp.

6. Pieroni, L.J., G.T. Skaperdas, and W.H. Heffner. Development of the Kellogg Coal Gasification Process. A.I.Ch.E. Symposium on Processing of Coal and Its Byproducts. Philadelphia, Dec. 5-9, 1965.

7. Raynor, J.W.R. Gasification by the Moving Burden Technique. Gasification and Liquefaction of Coal Symposium. A.I.M.E., New York, N.Y., Feb. 20-21, 1952.

8. Rummel, R. Coke and Gas, v. 21, 1959, pp. 493-501; 520.

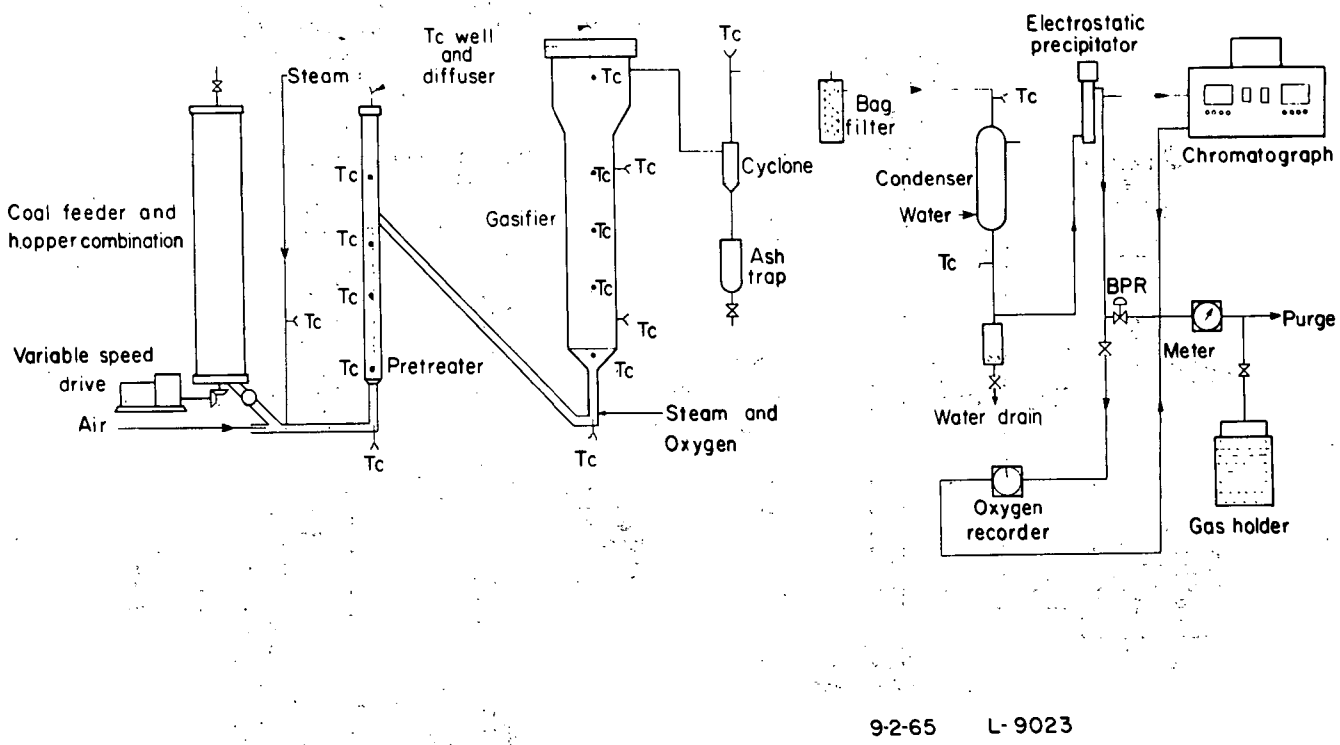

Figure 1. Gasification of caking coal with two fluid beds in series.

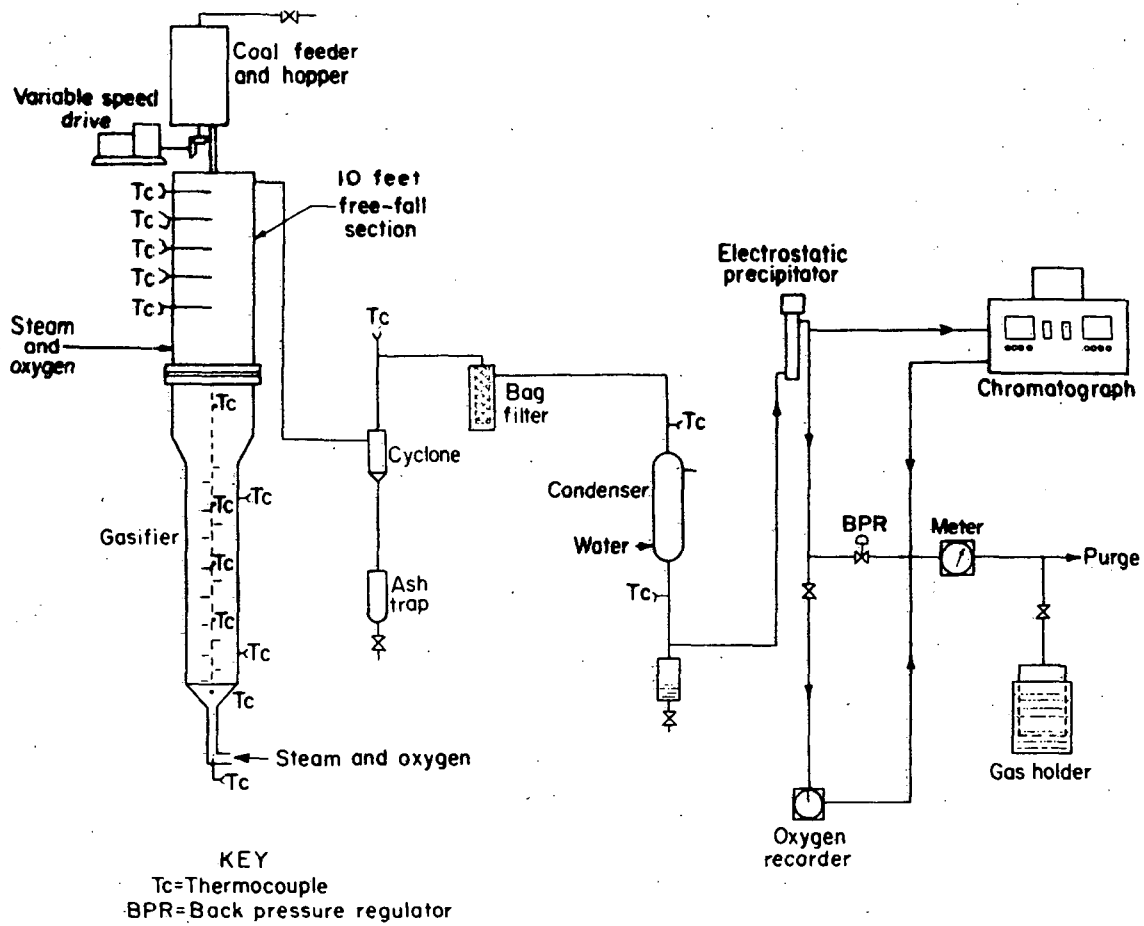

9-1-65 L-9024

Figure 2. Free-fall reactor and fluid-bed gasification system.

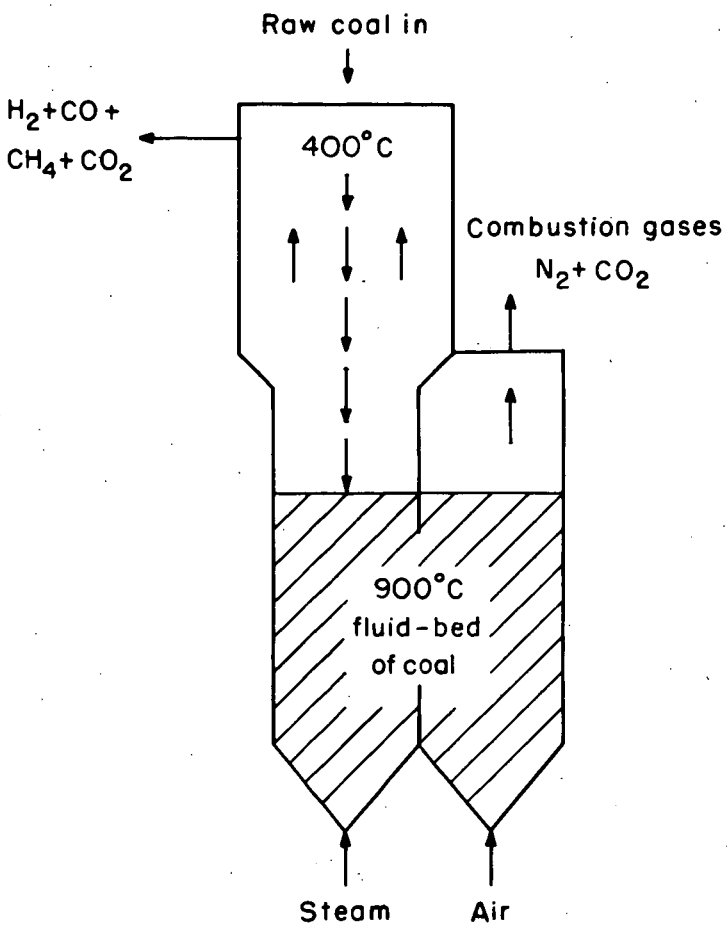

L-9749

Figure 3. Baffled reactor for gasification of coal with steam and air.

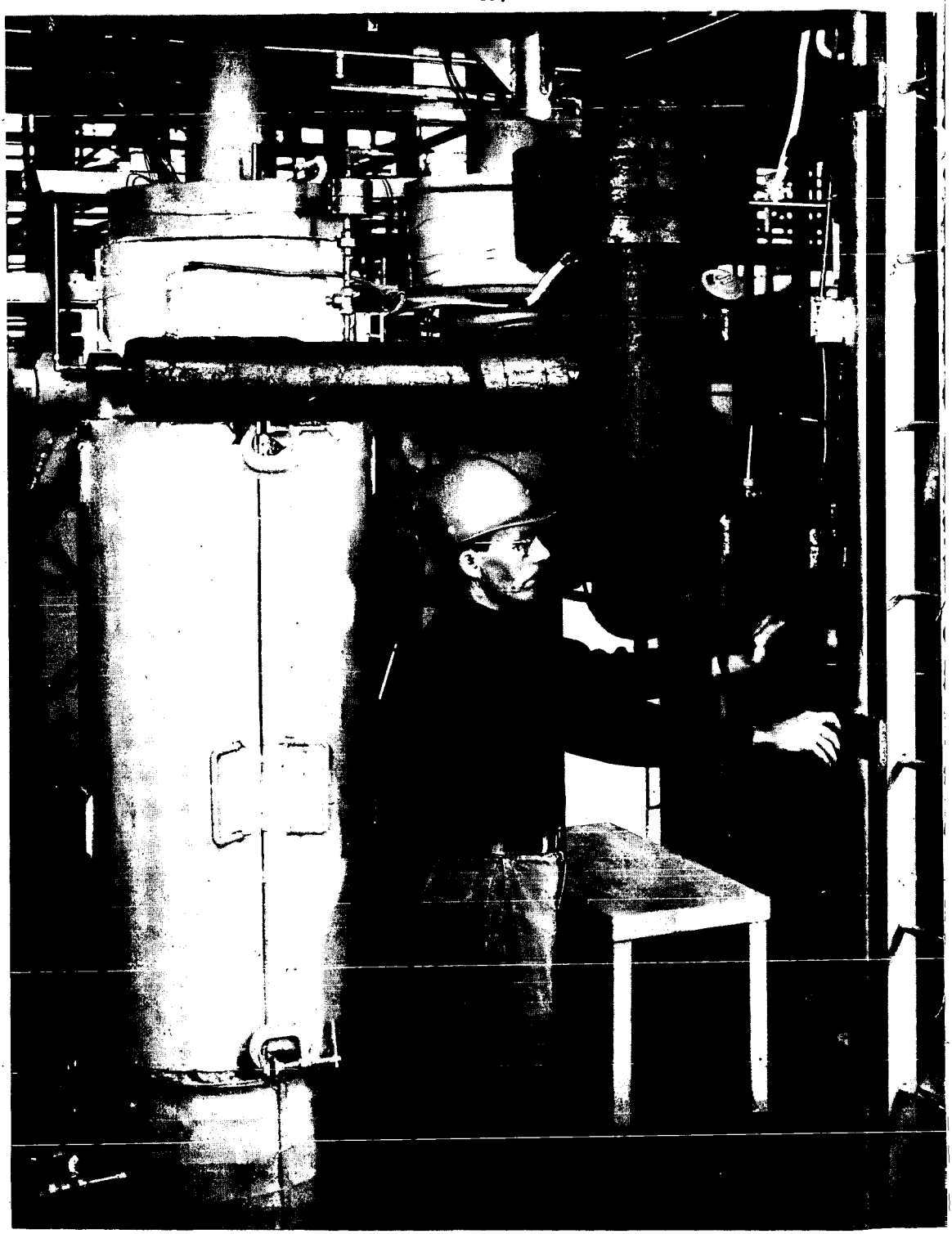

Figure 4. Gasification system for gasification of coal with steam and air.

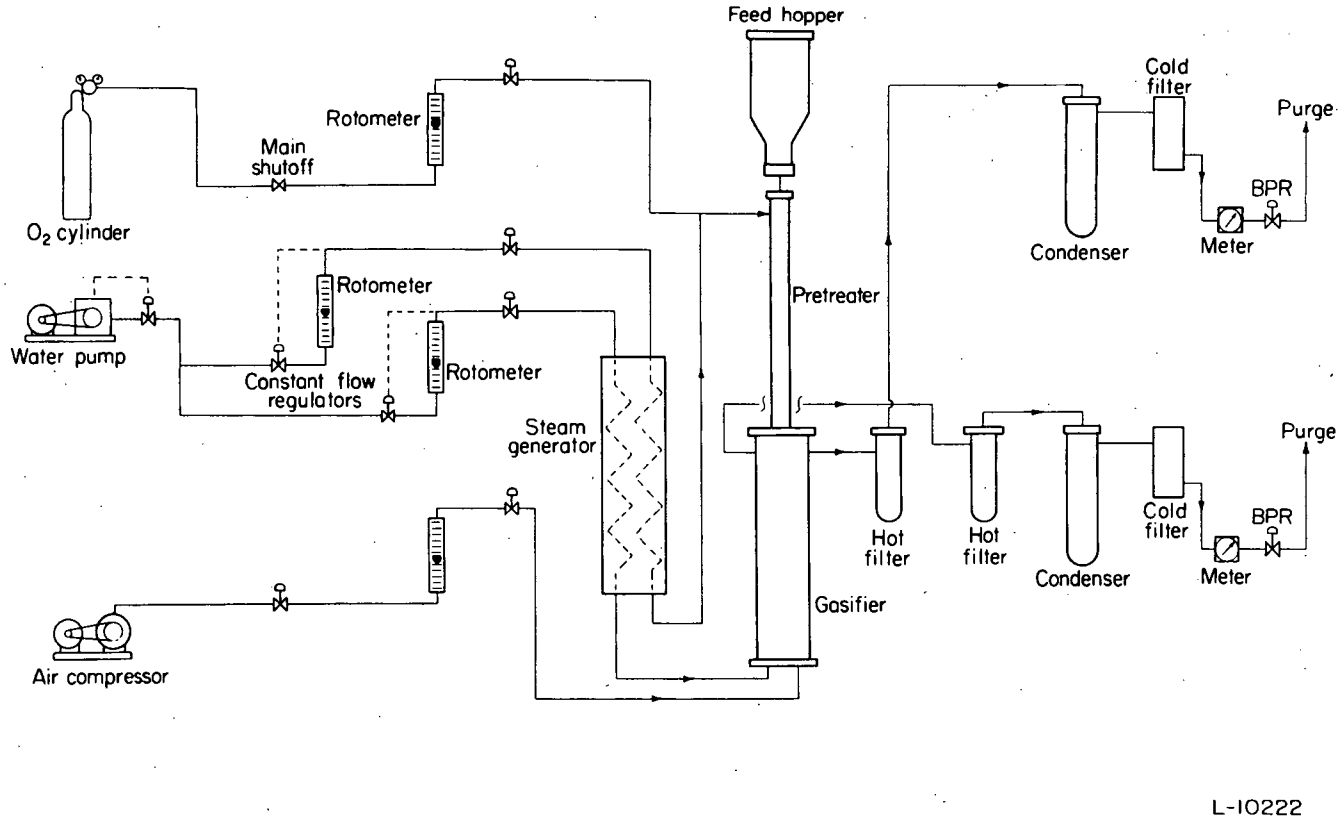

Figure 5. Flowsheet of gasification system.

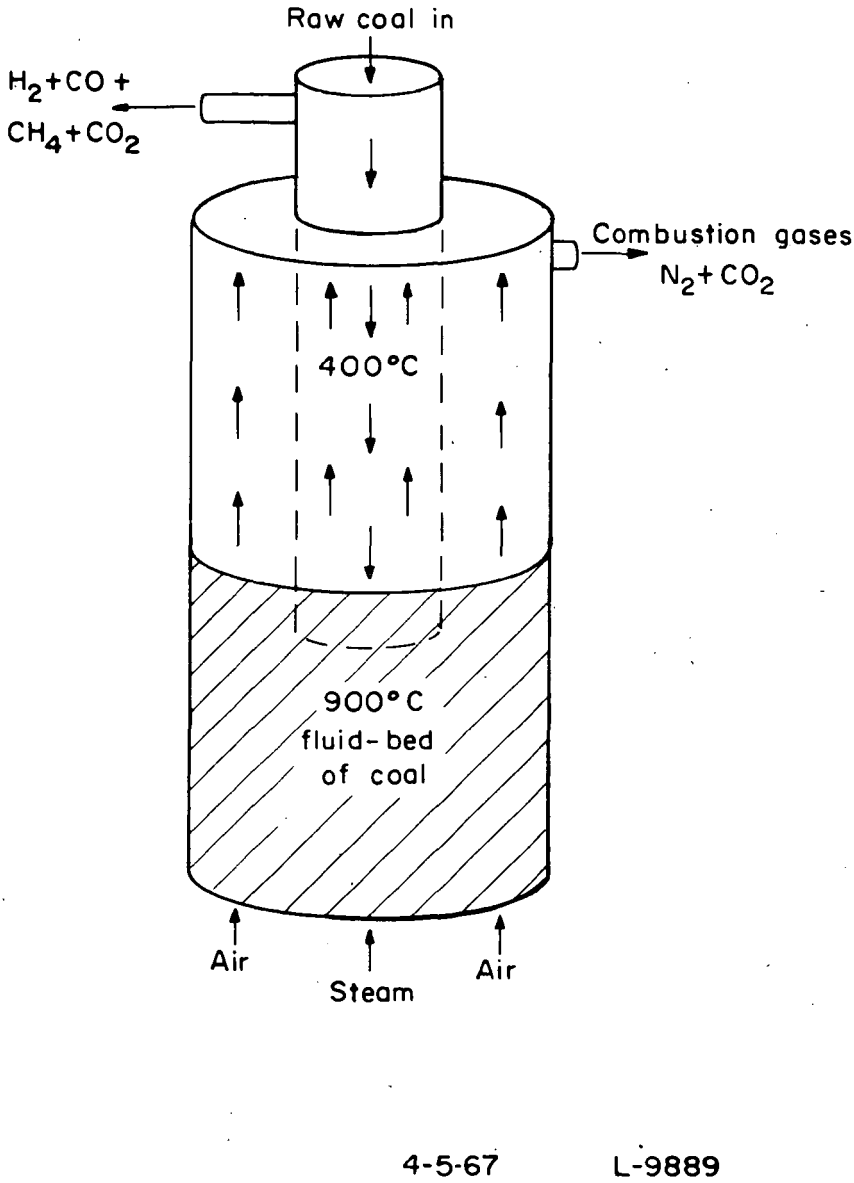

Figure 6. Two-tube reactor for gasification of coal with steam and air.