REFINING OF CRUDE SHALE OIL PRODUCED BY IN SITU RETORTING

By

C. M. Frost
Laramie Energy Research Center, U.S. Department of the Interior,
Bureau of Mines, Laramie, Wyoming 82070

INTRODUCTION

Crude shale oil produced in successful in situ combustion retorting experiments by the Bureau of Mines at Rock Springs, Wyo. (2,3) has characteristics that are somewhat different from those of shale oil crudes produced in either N-T-U or gas combustion retorts (1,9). Its gravity, pour point, and viscosity are such that it could be pipelined directly to a refinery without further processing. In addition to a lower specific gravity, viscosity, and pour point, this in situ crude oil contains more than twice as much naphtha and light distillate as gas combustion or N-T-U crudes. The in situ crude also shows a higher degree of saturation than the crudes produced by other processes. These properties indicate that in situ crude is similar to coker distillates from other crude shale oils.

In previous studies of the refinability of crude shale oils, either coking or prehydrogenation has been used as an initial step to reduce the viscosity and boiling range (5,10), or high-pressure hydrogenation with recycling of heavy ends has been used to produce catalytic reforming and catalytic cracking stocks (6-8). Because of the similarities between in situ crude shale oil and coker distillates obtained from other crude shale oils (4,10), the in situ crude should be amenable to refining methods used for coker distillates.

In 1956 the Bureau of Mines reported results of a refining study on coker distillate prepared by recycle, delayed coking of crude shale oil produced in an N-T-U retort (4). The present study describes similar experiments made with raw in situ shale oil produced at the Rock Springs, Wyo., in situ experiment (2,3). The refining involves hydrogenating that portion of the shale oil crude boiling above 400°F, hydrodenitrogenating and reforming the naphthas produced in the distillation and hydrogenation step, and catalytically cracking that portion of the hydrogenated heavy oil boiling above 400°F.

PROPERTIES OF IN SITU CRUDE SHALE OIL AND ITS DISTILLATE FRACTIONS

The crude shale oil used in this study was obtained from the in situ combustion retorting experiment at Rock Springs, Wyo., during the 3rd to 27th day of operation. A sample of the raw crude shale oil was dewatered and fractionated in a batch still equipped with a packed column, equivalent to 25 theoretical plates at total reflux. Properties of the crude shale oil and the various distillate fractions are shown in table 1.

The naphtha fraction from in situ crude shale oil is unstable, has a poor boiling range distribution, and contains undesirable quantities of sulfur and nitrogen. It has a low octane number despite the fact that it contains 26 volume percent aromatics. The diesel fuel is also unstable. It darkens rapidly on standing and has a high viscosity and carbon residue content. It contains less sulfur than the naphtha but considerably more nitrogen.

HYDROGENATION OF THE 400°F+ FRACTION

The total 400°F+ fraction from the in situ crude oil was hydrogenated over a presulfided cobalt molybdate catalyst in a fixed-bed, bench-scale unit, the flow diagram of which is shown in figure 1. The oil was mixed with 2,700 scf of hydrogen per barrel and passed downflow over the catalyst bed contained in a stainless steel reactor heated by a four-zone electric furnace. Pressure was maintained at 1,100 psig by means of a back pressure regulator, and liquid product was collected in a separator maintained at 200 psig. Tail gas from the separator was metered and sampled. The hydrogenation was accomplished in a continuous 96-hour run. No deactivation of the catalyst was evident from analyses of the products taken at various time intervals during the run. Processing conditions and product yields are shown in table 2.

Calculations based on the amounts of hydrogen charged to the unit and recovered in the products indicate that 1,145 scf of hydrogen per barrel was used in the hydrogenation step. This quantity is of the same order as that reported by Carpenter and coworkers (4) for hydrogenation of the 400°F+ fraction from N-T-U coker distillate. The amount of hydrocracking occurring during the hydrogenation was not excessive since only about 20 volume percent of the feed was converted to products boiling below 400°F as compared to the 45 volume percent reported for hydrogenation of the 400°F+ fraction of N-T-U coker distillate. About 75 percent of the nitrogen and 90 percent of the sulfur were removed from the charge stock by hydrogenation. These values are only slightly lower than those obtained by Carpenter and coworkers on the coker distillate from N-T-U crude at a slightly higher operating temperature.

The total liquid product from the hydrogenation step was separated into light naphtha, heavy naphtha, and 400°F+ bottoms in the same equipment used to fractionate the original in situ crude. Properties of the charge stock and liquid fractions are shown in table 3.

The heavy naphtha fraction had a research octane number of 55.4 and contained 0.28 weight percent nitrogen and 0.01 weight percent sulfur. The 400°F+ fraction contained 0.56 weight percent nitrogen and 0.02 weight percent sulfur.

HYDRODENITROGENATION (HDN) OF NAPHTHA

The heavy naphtha from the hydrogenation of the 400°F oil was combined with the raw naphtha from the distillation of the original crude. The combined naphtha was then hydrodenitrogenated over a presulfided nickel-tungsten catalyst in the same unit used for the hydrogenation step. Processing conditions used and product yields are shown in table 4. Properties of naphtha charge stock and the HDN product are shown in table 5.

The yield of naphtha from the HDN step was 103.96 volume percent. Considerable saturation occurred during the HDN step since olefins were completely eliminated and the aromatic content was reduced from 23 to 5.5 volume percent. This is also apparent from the lower octane number of 36.4. Nitrogen was reduced from 0.9 weight percent to 4 ppm. This reduction may partially account for the increase in the amounts of lower boiling components in the naphtha after HDN.

REFORMING OF NAPHTHA

The total liquid product from the HDN step was used as feedstock for reforming. A 20-ml bed of fresh Engelhard RD-150 reforming catalyst contained in a 9/16-inch I.D. stainless steel reactor was used. Reforming was carried out at 859°F, 500 psig, a liquid hourly space velocity of 3.0, and a hydrogen feed rate of 3,500 scf of hydrogen per barrel. Liquid products were collected in a separator maintained at 200 psig, and were stabilized to yield reformate and gases composed of butanes and lighter components. Octane numbers were obtained on the stabilized reformate. Operating conditions and product yields are shown in table 6, and properties of the reformate are given in table 7.

The liquid and hydrogen yields, octane numbers, and yield octane numbers are consistent with those found by other investigators when reforming shale oil naphthas under similar conditions (10). It is reasonable to expect that higher reforming temperatures would result in reformates with higher octane numbers.

CATALYTIC CRACKING OF 400°F+ HYDROGENATE

The 400°F+ bottoms from the hydrogenation of the 400°F+ crude oil were catalytically cracked in a fixed-bed laboratory unit. The oil was preheated in a tube furnace and passed downflow over a bed of Houdry HZ-1 catalyst contained in a stainless steel reactor heated by a four-zone electric furnace. Reactor effluent was cooled by exchange with tap water and was collected in a separator maintained at 32°F. Tail gas passed through a cold trap cooled with Dry Ice and into a gas holder. Gas and light ends were analyzed by GLC. Coke deposits were determined by analysis of the regeneration gases.

Cracking was carried out at 900°F, atmospheric pressure, and a liquid hourly space velocity of 0.8. Oil was charged to the unit until a catalyst to oil ratio of 4 was reached. Operating conditions used and product yields obtained are shown in table 8, and properties of the liquid products are shown in table 9. A total yield of 40.95 volume percent gasoline was calculated as the sum of observed gasoline volumes plus additional volumes potentially available from alkylation of propylenes and butenes.

At the 50-percent conversion level the gasoline had a high octane number of 99 + RON + 3 and represented 21.08 volume percent of the raw shale oil.

SUMMARY AND CONCLUSIONS

Refining tests made on crude shale oil produced in the Rock Springs, Wyo., in situ experiment showed that its refinability is similar to those of coker distillates made from other crude shale oils. A summary of product yields for the set of operating conditions used is shown in table 10. No attempt was made to optimize the refining conditions used since the object of these experiments was to compare the refining characteristics of total in situ crude shale oil with those of a coker distillate refined under similar conditions. The use of higher temperatures and pressures during the hydrogenation of the 400°F+ fraction would undoubtedly reduce the nitrogen content of the catalytic cracking stock and increase the amount of gasoline available for reforming.

ACKNOWLEDGMENTS

The work upon which this report is based was done under a cooperative agreement between the Bureau of Mines, U.S. Department of the Interior, and the University of Wyoming. Mention of specific brand names is made for information purposes only and does not imply endorsement by the Bureau of Mines.

LITERATURE CITED

1. Ball, John S., G. U. Dinneen, J. R. Smith, C. W. Bailey, and Robin Van Meter. Composition of Shale Oil Naphtha. Ind. Eng. Chem., 41, No. 3, 581-87 (1949).

2. Burwell, E. L., H. C. Carpenter, and H. W. Sohns. Experimental In Situ Retorting of Oil Shale at Rock Springs, Wyo. BuMines Tech. Prog. Rep. 16 (1969).

3. Burwell, E. L., T. E. Sterner, and H. C. Carpenter. Shale Oil Recovery by In Situ Retorting--A Pilot Study. J. Petrol. Technol., 1520-24 (December 1970).

4. Carpenter, H. C., C. B. Hopkins, R. E. Kelley, and W.I.R. Murphy. Method for Refining Shale Oil. Ind. Eng. Chem., 48, No. 7, 1139-45 (1956).

5. Cottingham, P. L., and H. C. Carpenter. Hydrocracking Prehydrogenated Shale Oil. Ind. Eng. Chem. Proc. Design and Devel., 6, No. 2, 212-17 (1967).

6. Cottingham, P. L., E. R. White, and C. M. Frost. Hydrogenating Shale Oil to Catalytic Reforming Stock. Ind. Eng. Chem., 49, No. 4, 679-84 (1957).

7. Crecelius, R. L., E. O. Kindschy, E. R. White, P. L. Cottingham, and W.I.R. Murphy. Recycle Hydrogenated Shale Oil Crude. Petrol. Refiner, 35, No. 6, 171-75 (1956).

8. Frost, C. M., H. C. Carpenter, C. B. Hopkins, Jr., S. S. Tihen, and P. L. Cottingham. Hydrogenating Shale Oil and Catalytic Cracking of Hydrogenated Stocks. BuMines Rept. of Inv. 5574 (1960).

9. Jensen, H. B., R. E. Poulson, and G. L. Cook. Characterization of a Shale Oil Produced by In Situ Retorting. Am. Chem. Soc. Div. of Fuel Chem., 15, No. 1, 113-21 (1971).

10. Montgomery, D. P. Refining Pyrolytic Shale Oil. Am. Chem. Soc. Div. of Petrol. Chem., Inc., 13, No. 2, F58-70 (1968).

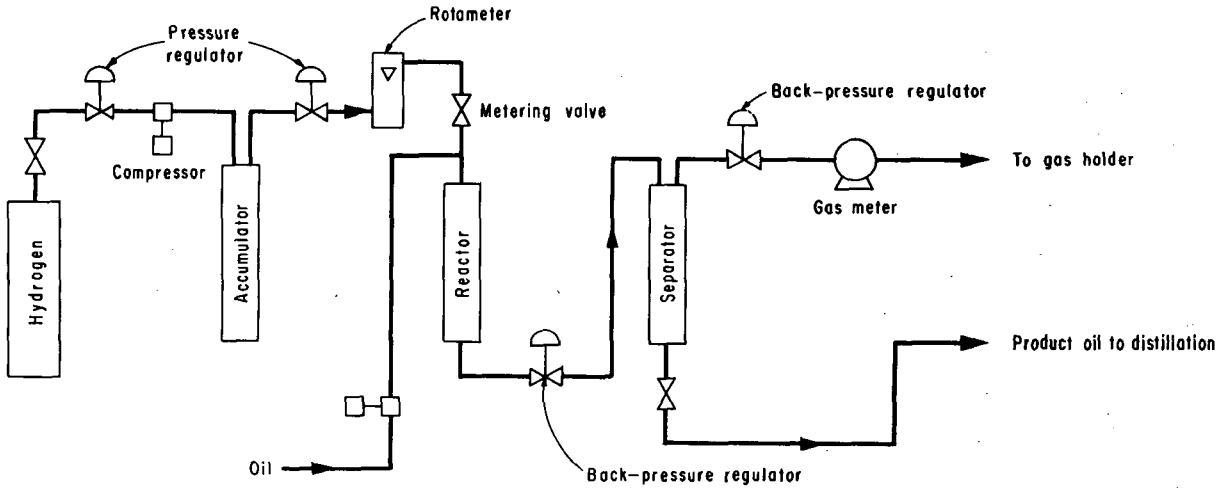

FIGURE 1.– Simplified Flow Diagram of Hydrogenation Unit.

OSCR-69-40

TABLE 1. - Properties of Rock Springs, Wyo., in situ crude shale oil and its distillate fractions

	Crude	Naphtha	Diesel	650°F+
Yield, vol pct	100	25.57	45.73	28.70
Gravity, °API	28.4	44.1	30.5	15.6
Carbon, wt pct	84.88	84.32	85.38	84.58
Hydrogen, wt pct	12.02	13.66	12.04	10.87
Nitrogen, wt pct	1.69	1.23	1.55	2.17
Sulfur, wt pct	0.60	0.66	0.59	0.50
Oxygen, wt pct	0.80	0.13	0.44	1.83
Pour point, °F	10	-	<5	-
Viscosity, SUS at 100°F	45	-	38	-
Carbon residue, wt pct	1.7	-	1/1.2	2.4
Ash, wt pct	0.01	-	1/0.03	0.05
ASTM distillation, °F at 760 mm:				
IBP	241	239	428	-
5 pct recovered	348	290	451	-
10	383	303	460	-
20	422	314	474	-
30	460	326	485	-
40	498	336	494	-
50	537	346	508	-
60	575	356	522	-
70	625	365	542	-
80	665	375	563	-
90	-	387	595	-
95	-	398	614	-
EP	673	408	631	-
Recovery, vol pct	83.0	98.5	98.5	-
Octane numbers:				
Research, clear	-	57.9	-	-
+ 3 ml TEL	-	59.4	-	-
Hydrocarbons, vol pct:				
Paraffins + naphthenes	-	56	-	-
Olefins	-	18	-	-
Aromatics	-	26	-	-

1/ 10 percent bottoms.

TABLE 2. - Hydrogenation of 400°F+ in situ shale oil

Operating conditions:				
Temperature, °F	815			
Pressure, psig	1100			
Space velocity, V_o/V_c/hr	0.72			
Catalyst	Co-Mo			
Hydrogen feed, scf/bbl	2700			
Hydrogen consumed, scf/bbl	1145			
Product yields:	Percent of feed		Percent of crude	
	wt	vol	wt	vol
Liquid product	95.60	102.40	73.28	76.22
C_5 - 160°F	1.14	1.69	0.87	1.26
160° - 400°F	16.33	18.79	12.52	13.99
400°F+	78.13	81.92	59.89	60.97
Coke	0.13		0.10	
Hydrogen	-1.92		-1.47	
Methane	0.80		0.61	
Ethane	0.84		0.64	
Propane	0.78		0.60	
Isobutane	0.12	0.19	0.09	0.14
Butane	0.41	0.63	0.31	0.47
Butenes	0.09	0.13	0.07	0.10
Ammonia	1.63		1.25	
Hydrogen sulfide	0.59		0.45	
Water	0.92		0.71	

TABLE 3. - Properties of charge stock and products from hydrogenation of 400°F+ oil from in situ crude

	Charge	Total liquid product	Light naphtha C_5-160°F	Heavy naphtha 160°-400°F	400°F+
Properties:					
Gravity, °API	25.1	36.6	80.0	48.5	32.5
Carbon, wt pct	85.19	86.24	83.42	86.16	86.32
Hydrogen, wt pct	11.61	13.22	16.49	13.53	13.11
Nitrogen, wt pct	1.87	0.48	0.03	0.28	0.56
Sulfur, wt pct	0.59	0.06	0.06	0.01	0.02
Hydrocarbons, vol pct:					
Paraffins	-	-	94.1	53.6	-
Naphthenes	-	-	2.4	29.8	-
Olefins	-	-	0.0	0.0	-
Aromatics	-	-	3.5	16.6	-
ASTM distillations, °F at 760 mm:					
IBP	-	168	-	199	434
5 pct recovered	437	332	-	244	461
10	457	387	-	261	467
20	483	437	-	275	478
30	510	465	-	298	495
40	534	486	-	306	512
50	573	508	-	316	538
60	614	532	-	326	567
70	657	561	-	340	602
80	678	598	-	352	638
90	-	644	-	365	-
95	-	694	-	375	-
EP	679	694	-	381	661
Recovery, vol pct	83.5	95.0	-	98.0	87.0
Octane numbers:					
Research, clear	-	-	-	55.4	-
+ 3 ml TEL	-	-	-	75.2	-

TABLE 4. - Hydrodenitrogenation of naphtha

Operating conditions:				
Temperature, °F	700			
Pressure, psig	1500			
Space velocity, V_o/V_c/hr	1.07			
Catalyst	Ni-W			
Hydrogen feed, scf/bbl	5000			
Hydrogen consumed, scf/bbl	649			
Product yields:	Percent of feed		Percent of crude	
	wt	vol	wt	vol
Liquid product	98.72	103.96	35.41	41.13
Coke	0.03		0.01	
Hydrogen	-1.23		-0.44	
Methane	0.03		0.01	
Ethane	0.22		0.08	
Propane	0.42		0.15	
Isobutane	0.11	0.16	0.04	0.06
Butane	0.14	0.20	0.05	0.08
Ammonia	1.09		0.39	
Hydrogen sulfide	0.47		0.17	

TABLE 5. - Properties of HDN charge and product naphthas

	Charge	Product
Properties:		
Gravity, °API	44.8	54.2
Carbon, wt pct	84.96	84.98
Hydrogen, wt pct	13.61	15.02
Nitrogen, ppm	9000	4
Sulfur, wt pct	0.43	0.00
Hydrocarbons, vol pct:		
Paraffins	65	56.1
Naphthenes		38.4
Olefins	12	0.0
Aromatics	23	5.5
ASTM distillation, °F at 760 mm:		
IBP	203	175
5 pct recovered	257	237
10	273	252
20	294	268
30	309	281
40	323	301
50	336	317
60	346	331
70	357	343
80	367	358
90	379	377
95	389	395
EP	400	404
Recovery, vol pct	98.0	97.3
Octane numbers:		
Research, clear	57.0	36.4
+ 3 ml TEL	-	59.3

TABLE 6. - Reforming of HDN naphtha

Operating conditions:				
Temperature, °F	859			
Pressure, psig	500			
Space velocity, V_o/V_c/hr	3.01			
Catalyst	RD-150			
Hydrogen feed, scf/bbl	3500			
Hydrogen yield, scf/bbl	951			
Product yields:	Percent of feed		Percent of crude	
	wt	vol	wt	vol
Liquid product	91.85	89.61	32.52	36.86
Hydrogen	1.89		0.67	
Methane	0.48		0.17	
Ethane	1.44		0.51	
Propane	2.54		0.90	
Propylene	0.05	0.06	0.03	0.03
Isobutane	0.65	0.88	0.23	0.36
Butane	1.10	1.46	0.39	0.60

TABLE 7. - Properties of reformate

ASTM distillation, °F at 760 mm:	
IBP	141
5 pct recovered	201
10	230
20	259
30	275
40	290
50	308
60	318
70	330
80	340
90	357
95	375
EP	383
Recovery, vol pct	96.5
Octane numebers:	
Research, clear	73.0
+ 3 ml TEL	90.0

TABLE 8. - Catalytic cracking of 400°F+ hydrogenate

Operating conditions:				
Temperature, °F	899			
Pressure	Atmospheric			
Space velocity, V_o/V_c/hr	0.8			
Catalyst	HZ-1			
Product yields:	Percent of feed		Percent of crude	
	wt	vol	wt	vol
Liquid product	76.34	81.01	45.72	55.81
C_5 - 400°F	24.54	30.60	14.70	18.66
400°F+	51.80	50.41	31.02	30.74
Coke	7.21		4.32	
Hydrogen	0.47		0.28	
Methane	1.27		0.76	
Ethane	1.29		0.77	
Ethylene	0.65		0.39	
Propane	2.74		1.64	
Propylene	2.24	3.73	1.34	2.27
Isobutane	4.46	6.88	2.67	4.20
Butane	1.50	2.24	0.90	1.36
Butenes	1.84	2.42	1.10	1.48

TABLE 9. - Properties of products from catalytic cracking of 400°F+ hydrogenate

	C_5-400°F	400°F+
ASTM distillation, °F at 760 mm:		
IBP	107	410
5 pct recovered	123	435
10	140	439
20	155	448
30	180	455
40	228	467
50	256	479
60	281	506
70	296	526
80	318	-
90	344	-
95	365	-
EP	373	530
Recovery, vol pct	96.0	71.5
Octane numbers:		
Research, clear	90.9	-
+ 3 ml TEL	99.2	-

TABLE 10. - Summary of yields from refining of in situ crude shale oil

Process[1/], wt pct	A	B	C	D	Totals
C_5 - 160°F gasoline	0.87				0.87
Reformate			32.52		32.52
CC gasoline				14.70	14.70
400°F+ recycle oil				31.02	31.02
Coke	0.10	0.01		4.32	4.43
Hydrogen	-1.46	-0.44	0.67	0.28	-0.95
Methane	0.61	0.01	0.17	0.76	1.55
Ethane	0.64	0.08	0.51	0.77	2.00
Ethylene				0.39	0.39
Propane	0.60	0.15	0.90	1.64	3.29
Propylene			0.03	1.34	1.36
Isobutane	0.09	0.04	0.23	2.67	3.03
Butane	0.31	0.05	0.39	0.90	1.65
Butenes	0.07			1.10	1.17
Ammonia	1.25	0.39			1.64
Hydrogen sulfide	0.45	0.17			0.62
Water	0.71				0.71
					100.95

1/ A. Hydrogenation of 400°F+ in situ crude at 815°F, 1100 psig, and 0.72 LHSV.
B. Hydrodenitrogenation of raw naphtha and 160°-400°F naphtha from A at 700°F, 1500 psig, and 1.1 LHSV.
C. Reforming of naphtha from B at 500 psig, 859°F, and 3 LHSV to yield 89.6 vol pct of 90 RON + 3 reformate.
D. Catalytic cracking of 400°F+ oil from A at 899°F and 0.8 LHSV.