THE EXTINCTION LIMITS OF AN ESTABLISHED FLAME

Spencer C. Sorenson*, Lester D. Savage*, and Roger A. Strehlow†

*Department of Mechanical and Industrial Engineering and †Aeronautical and Astronautical Engineering Department, University of Illinois at Urbana-Champaign, Urbana, Illinois 61801.

INTRODUCTION

Many coal mine explosions originate when the methane-air mixture at the working face is ignited. The air motion resulting from the initial combustion causes the coal dust layer on the walls to become stirred into the air ahead of the propagating flame. The explosion process then becomes one of a propagating coal dust methane flame. Therefore, any device which is designed to extinguish the flame by adding some sort of suppressant to the unburned air must be effective with coal dust methane flames of varying proportions. It is, therefore, essential to have a knowledge of the effectiveness of various suppressants and the mechanism by which they work.

In this project, we are developing a technique to study both the effectiveness and suppression mechanism for various solid and gaseous suppressants in methane coal dust air flames. In this paper, we are reporting some initial results dealing with the effect of gaseous suppressants on a gaseous methane air flame.

Traditionally, the flammability of such fuel-air suppressant mixtures has been determined by observing the upward or downward propagation of a flame over a fixed distance in a relatively large diameter tube after ignition at the open end of the tube (1). There is, however, some question as to the applicability of this type of data to the case where a flame propagates from a fully flammable region into a region that contains a suppressant.

This paper describes a new technique for determining flammability limits using a large steady flow burner in which the suppressant mixture is placed in contact with a flame propagating through a mixture devoid of suppressant in an attempt to more realistically model the mine situation.

THE BURNER

In order to investigate the problem of direct extinguishment, a special steady flow burner was constructed. Provisions have been made for the use of coal dust as a fuel and solids as suppressants although they were not used to obtain the results discussed in this report. The basic objective of the burner design was to obtain two relatively large area streams, one of which will support a steady oblique flame sheet such that the flame can be made to propagate from this fully flammable region into another region containing suppressant. This was accomplished by dividing the flow areas at the burner head in the manner shown in Figure 1.

The two inner rectangular regions of this burner are fed by flows that contain only a fuel-air mixture for the larger annular shaped

rectangular region and fuel-air suppressant mixtures for the central rectangular region. The outer of these two regions therefore provides a typical non-suppressed premixed laminar flame as an ignition flame while the inner region contains a flow in which a suppressant may be added to the mixture to test for flammability limit behavior. The flow rates and composition of each region may be varied and measured independently using rotameters. The nitrogen flows along the two short edges of the burner prevent flame attachment at the end of the burner and facilitate end-on observation of the flame (i.e., observation along the major axis of the burner). The air channels along the longer outer edges of the burner shield the outer edges of the flame from external disturbances and can be used to stabilize large diffusion flames in the annular rectangular flow regime. Flow diffusers have been placed in all of the flow streams below the burner head in order to obtain a uniform flow velocity in each outlet region of the burner. The final exit plane of the burner is filled with over 2000 closely packed 1/8 inch stainless steel tubes which are long enough to develop and stabilize a fully laminar flow at the burner head. These tubes also serve to quench the flame and prevent flash back into the body of the burner at low flow velocities. In addition, as shown in Figure 1, the burner head contains a number of parallel stainless steel shim stock spacers which help stabilize both the flow and the flame.

THE TECHNIQUE

The flame shapes that are observed in this burner are actually quite complex and, in general, depend upon the stoichiometry of both the surrounding ignition stream and the central suppressant stream as well as their velocities.

It has been found that in the ignition stream a single large tent flame, open at both ends, may be easily stabilized on the rich side even though on the lean side it is easier to stabilize a flame which attaches to most of the shim spacers and thereby producing a shorter height multiple tent flame which is also open at the ends. In all these cases, the inner test stream, which may contain suppressant, is contacted on four sides by a hot product stream issuing from the ignition region.

In the experiments on flammability, we are interested in how this central stream behaves as its composition passes through the flammability limit of the mixture. Preliminary observations showed that for suppressant and ignition stream equivalence ratios which were lean-rich or rich-lean and for a flammable mixture in the suppressant stream the burner always exhibited a central tent flame in the suppressant stream which was anchored at the rectangular stream divider edges. However, for a rich-rich or lean-lean interface, the flame did not attach at the interface divider edge but instead propagated across the interface to produce a flame which, in general, situated itself at a different oblique angle than that which existed in the ignition stream. These two behaviors are illustrated for a section of the flame in Figure 2.

It was observed that if one viewed the flame along the major axis of the burner as one altered the suppressant stream composition from flammable to inflammable, the included angle of the central tent flame at first rapidly approached an angle which was near zero and then remained at or near that small angle with further changes in composi-

tion. Interestingly enough, this type of distinct limit behavior was observed for either of the interface geometries described in Figure 2.

Based on the above observations, the following procedure for determining flammability limits was developed. A premixed laminar flame was established in the outer (non-suppressed) stream, while the mixture in the inner (suppressant) stream was set well beyond the flammability limit in order to prevent flashback. The flows were adjusted so that the inner stream velocity always remained close to that of the outer stream.

During an experimental run the composition of the inner (suppressant) stream was changed systematically so that its composition varied in steps from a completely non-flammable to a completely flammable mixture. This was done by either changing the percentage of fuel (methane) or the percentage of suppressant depending upon the region of the flammability curve that was to be investigated in that particular run. Observations of the flame angle were made through a transparent plexiglass window located approximately three feet from the burner head. For each of the flow settings (i.e., for each of the compositions of the suppressant stream) the operator placed his eye in line with each flame tent edge and drew lines parallel to each side of the flame sheet as it existed just inside of the suppressant stream. A transparent plastic sheet was mounted on the plexiglass window for this purpose. In this way an accurate measurement of the included flame angle was obtained for that particular set of rotameter settings. This includedangle between the two flame sheets was divided by two to obtain the oblique flame angle α. Since this operation was performed for a number of points during a systematic change in composition, the technique in effect involves titrating the flame for an end point corresponding to the flammable limit of that particular mixture. Figure 3 illustrates the experimentally obtained relationship between the included flame half angle, α, and the fuel concentration in the suppressant stream for three different suppressant percentages. In this case the percent methane was the titration variable. Observe the decrease of α towards zero with a distinct change in the slope of the alpha-fuel composition curve when the angle becomes close to zero. In some cases, the stream lines were slightly divergent or convergent so that the maximum inflection in the curve (end point) was observed for values of alpha slightly less than or slightly greater than zero. In actual practice, the flammable limit composition was chosen as the point at which the flammable and inflammable branches of the alpha, percent composition curves intersected as indicated by the smooth extrapolation of these curves. It should be noted that it was still possible to observe an "apparent flame sheet" in our burner even though the suppressant stream composition was well outside the flammability limit. This can be attributed to reactions occurring as the fuel in the suppressant stream encounters hot combustion gases from the ignition stream due to diffusional processes. Thus, some observable reactions were occurring although under these conditions they were not of sufficient magnitude to support a propagating flame in the suppressant stream.

ACCURACY AND REPRODUCIBILITY OF THE TECHNIQUE

In order to check on accuracy and reproducibility, a few titration runs were repeated at different suppressant flow velocities and on different days. A comparison of the α versus CH_4 percent for these cases is shown in Figure 4.

Both of these curves illustrate that the reproducibility of the data is $\pm$ 1/2 percent CH_4 and that the location of the inflection point is relatively insensitive to the flow velocity. However, sensitivity of the technique is determined by the flow velocity to some extent because at high flow velocity and at high suppressant concentrations, the maximum value of α becomes very small, as is shown in Figure 3. Therefore, the experiments were always performed with the lowest possible suppressant flow velocity for the particular desired titration.

We feel that the equivalence ratio of the external ignition stream may possibly have an effect on the end point, i.e., on the measured flammability limit. However to date all the data has been taken with a lean surrounding ignition stream. This is the reason why the rich end of the α curves in Figure 4 all have inflammable branches whose value of α is greater than zero degrees. Under these conditions the rich branch of the flammability curve is always measured from an attached flame and flow divergence does not occur easily. The lean branch, on the other hand, is always oriented as shown in Figure 2b and under these conditions central stream divergence occurs relatively easily. Thus, some of the lean end points occur for relatively large negative values of α.

RESULTS

The effects of four suppressants (Ar, N_2, CO_2, and Halon 1301) on the flammability limits of a methane-air flame are shown in Figure 5. The flammability limits determined by this technique were generally found to be wider than those determined by standard vessel propagation techniques. The lean limits obtained tended to be about 1 percent CH_4 leaner than vessel propagation limits and conversely, the rich limits were about 1 percent CH_4 richer than vessel propagation limits for a given percentage of suppressant. The only exception noted was the case of Halon 1301 in which the rich flammability limits were approximately 2 percent CH_4 richer than those from vessel propagation limits (2).

It was observed that the rich limits for N_2 and AR were indistinguishable and that the lean limits were very close, although the N_2 lean limits were 10 percent higher than the values of Ar lean limits. The results of other investigators (1) show a substantial difference between N_2 and Ar limits. The reason for the differences in the results is not clear at this time. One of the features of the new technique which may have a bearing on the comparison with other techniques is the lack of a heat sink for the suppressed gases. Thus, the thermal conductivity of the gases may have a stronger influence in one system than in the other. In addition, since the new technique involves the use of a forced-flow system, the physical properties of the gases could also have varying degrees of influence in the different techniques.

CONCLUSIONS

A technique has been developed for the measurement of the extinction limits of well-established flames by gaseous suppressants. The results of this technique are similar to the results of conventional techniques, although the flammability limits are wider for this technique than those obtained for conventional techniques.

ACKNOWLEDGMENT

This work was supported by the Bureau of Mines, U.S. Department of Interior under Contract H0-122-122, Dr. David S. Burgess, Technical Monitor. The authors would also like to express their sincere appreciation to Richard A. Moreau, James H. Rush, and Gary M. Vance for their contributions to this work.

REFERENCES

1. Coward, H.F. and Jones, G.W. "Limits of Flammability of Gases and Vapors" Bulletin 503, U.S. Bureau of Mines, 1952.

2. Kuchta, J.M. and Burgess, D.S. "Effectiveness of Halogenated Agents Against Gaseous Explosions and Propellant Fires" Proceedings of Symposium on an Appraisal of Halogenated Fire Extinguishing Agents, National Academy of Sciences, p. 257, 1972.

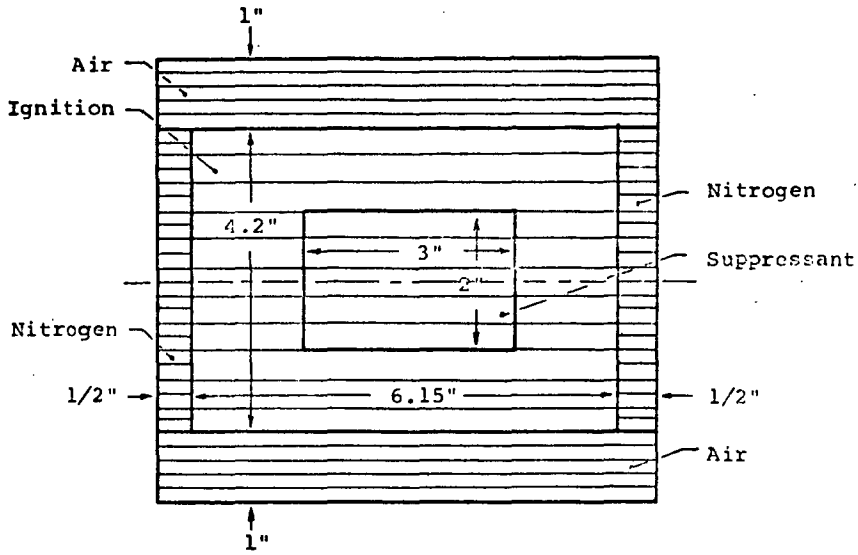

Figure 1. The burner head showing the different flow regions and the shim stock sheets (thin lines) used as flow straighteners and flame holders.

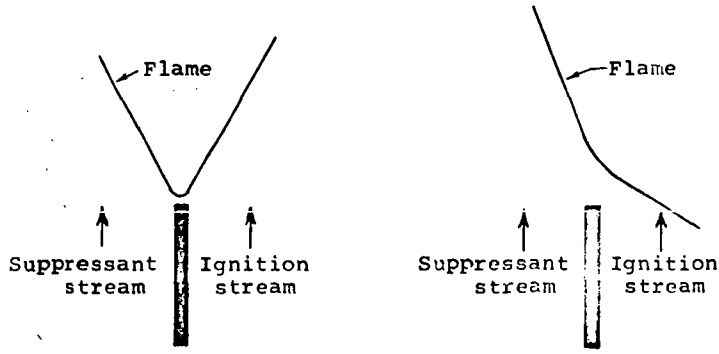

(a) Rich-lean or lean-rich interface (b) Rich-rich or lean-lean interface

Figure 2. Flame geometries as determined by relative equivalence ratios at the interface.

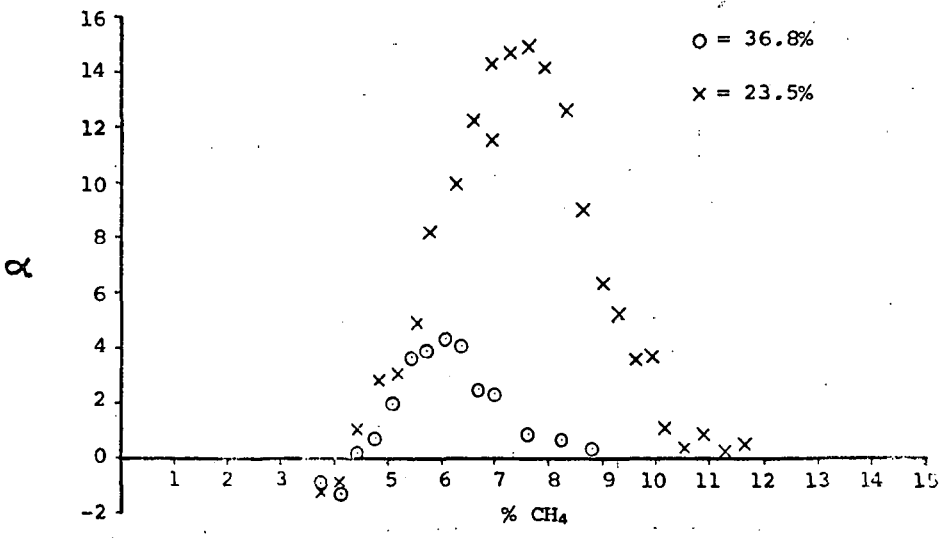

Figure 3. Effect of fuel concentration on flame angle.

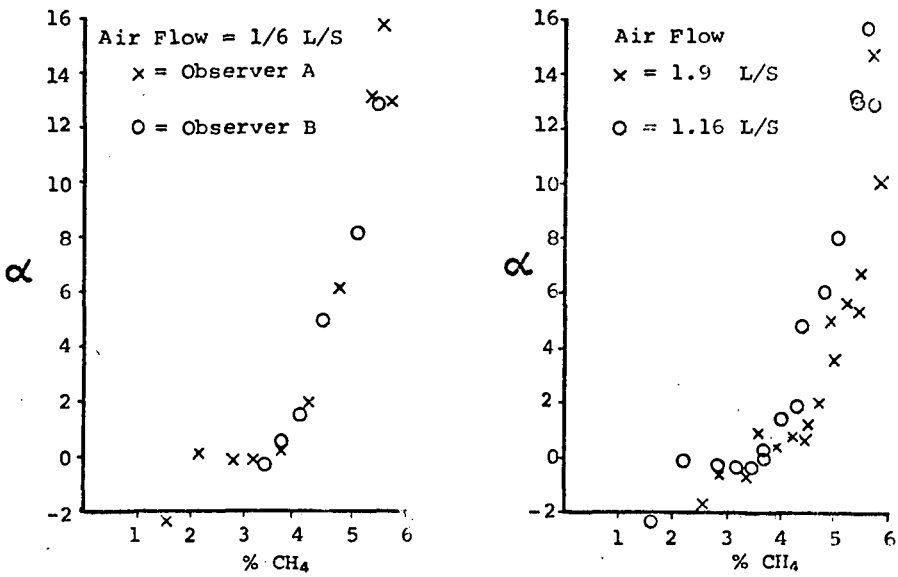

Figure 4. Effect of observer and flow velocity on end point.

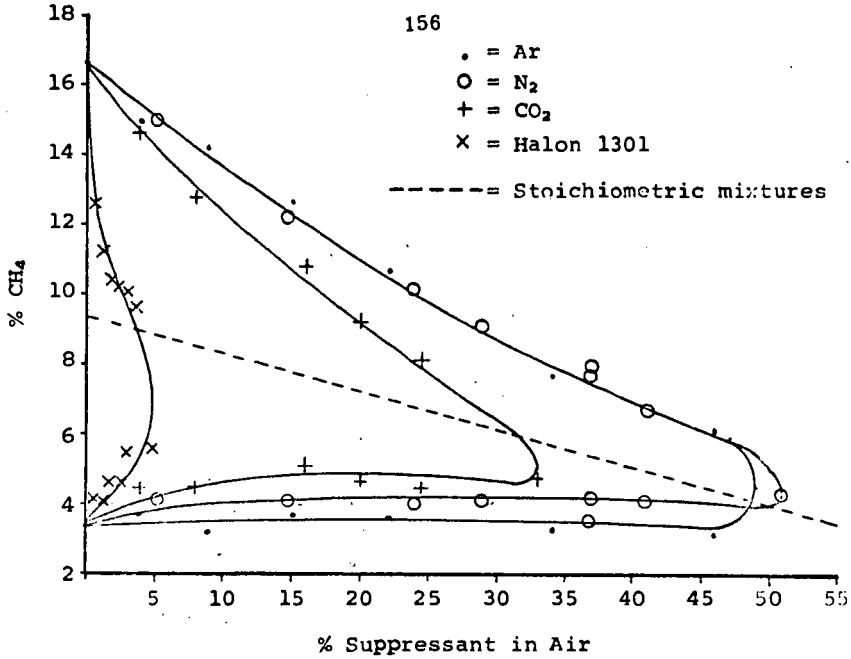

Figure 5. Flammability limits for methane-air suppressant mixtures.