REMOVAL OF SULFUR FROM COAL BY TREATMENT WITH HYDROGEN

J. H. Gary, R. M. Baldwin, C. Y. Bao, R. L. Bain,
M. S. Kirchner, and J. O. Golden

Chemical and Petroleum-Refining Engineering Dept.
Colorado School of Mines
Golden, Colorado 80401

This study was performed with the financial support of the Office of Coal Research (Contract No. 14-32-0001-1225), United States Department of the Interior; the State of Colorado; and the Office of Research Services, Colorado School of Mines.

ABSTRACT

The Colorado School of Mines is performing a research contract under the sponsorship of the Office of Coal Research, the State of Colorado, and the Office of Research Services of the Colorado School of Mines to determine the importance of operating variables and raw material properties upon coal desulfurization via the solvent refining process.

The solvent refining process is being studied in bench scale, high-pressure, high-temperature, rocking-bomb autoclave batch reactors. The liquid product from the reactor is vacuum distilled to give a solvent refined coal and the refined coal product is analyzed for sulfate, pyritic, and total sulfur content, with organic sulfur content being determined by difference. Initially five variables were studied; temperature, partial pressure of hydrogen, solvent-to-coal ratio, solvent type, and reaction time. The reaction time was determined to be statistically unimportant; and anthracene was shown to be the better solvent. Further experimental work has been completed to investigate the three remaining operating variables. Statistical analysis of experimental data is now being performed to investigate the non-linearity of sulfur removal from coal as influenced by the operating variables.

ACKNOWLEDGMENTS

The authors gratefully acknowledge the assistance of the following students in conducting a portion of this investigation: Mr. Steve Barker, Mr. Jeff Handwerk, Mr. Russ Lambert, Miss Dana Light, Mr. Richard Long, Miss Carol Payne, Miss Leonila Quintanilla, and Mr. S. Rao. Dr. Dean Dickerhoof, of the Colorado School of Mines Chemistry Department, has contributed many valuable suggestions concerning the chemical analysis of the various forms of sulfur. Professor William Astle, of the Colorado School of Mines Mathematics Department, contributed significantly to the statistical analysis of the experimental data. The personnel of the Pittsburgh and Midway Coal Mining Company (Merriam, Kansas) were very helpful in discussing several aspects of the coal desulfurization problem. In particular, Mr. W. C. Bull, Dr. C. H. Wright, and Mr. R. E. Perrussel, offered a number of valuable suggestions regarding the total experimental program.

The authors also gratefully acknowledge the financial support of the following agencies in conducting this investigation:

1) The Office of Coal Research, United States Department of the Interior

2) The State of Colorado

3) The Office of Research Services, Colorado School of Mines.

BACKGROUND

The Colorado School of Mines is currently engaged in a three year, three-phase research program to study coal desulfurization via the solvent refining process. The importance of operating variables and raw material properties is being investigated to ascertain their influence on the degree of desulfurization.

Bench-scale, high-pressure, high-temperature rocking bomb autoclave batch reactors are being used to study the solvent refining process. Coal of a specific size fraction (-28 mesh) is mixed with an organic solvent and charged to the reaction bomb. The coal-solvent slurry is agitated and brought to reaction temperature under a hydrogen blanket. After a 15 minute time interval at the reaction conditions, the bomb is pulled and the reaction quenched by rapid cooling. The liquid product (including undissolved ash) is then charged to a distillation flask and vacuum distilled to recover the solvent and a solid coal product, at a maximum temperature of 300°C and an ultimate absolute pressure of 3 mm of mercury. The refined coal product is analyzed for sulfate, pyritic and total sulfur content, with organic sulfur content being determined by the difference between total sulfur and inorganic (sulfate + pyritic) sulfur content. Recovered solvent is analyzed for total sulfur content by induction furnace techniques and for hydrogen content by infra-red spectroscopy.

Phase I (first year effort) studied, in a statistically designed experiment, the importance of five operating variables. These variables were studied at two levels, as listed below:

1) Temperature: 325, 400°C
2) Partial pressure of hydrogen (at reaction conditions): 600, 1200 psig
3) Solvent to coal ratio: 2/1, 3.5/1
4) Solvent type: Anthracene, tetralin
5) Reaction time: 7.5 minutes, 15 minutes

The results of the factorial analysis for significance showed temperature, pressure and solvent-to-coal ratio to be significant at the 90% confidence level. Anthracene oil was also shown to be a clearly superior solvent by the Phase I significance tests.

The operating variables chosen as significant from the Phase I experimental investigation are being further examined in Phase II (second year) of the research program. Phase II is examining the non-linearity of the removal of sulfur from coal via the solvent refining process as influenced by the operating variables.

The conditions chosen from the Phase I study for the Phase II study were as follows:

1) Temperature: 375, 400, 425°C
2) Partial pressure of hydrogen (at reaction conditions): 1000, 1500, 2000 psig
3) Solvent-to-coal ratio: 2/1, 3/1, 4/1

Anthracene oil, the better Phase I solvent, was chosen for use in the Phase II experimental program. The operating variables have been studied at three levels in a full-factorial, triply-replicated experimental design to gather the data necessary to perform the significance tests and construct a mathematical model for desulfurization of coal via the solvent refining process. Initial data reduction and significance testing of the variables has allowed significant linear and quadratic effects of the operating variables and interactions (through second order) to be identified in each of the four data sets (total sulfur, sulfate sulfur, pyritic sulfur, organic sulfur) for one bituminous and one sub-bituminous coal. The main effects and interactions will be used as independent variables in a mathematical model for the desulfurization of coal via the solvent refining technique.

LITERATURE SURVEY

Solvent Refining Process

The Pott-Broche (1) process was developed in Germany for use in obtaining an ash-free product that could be readily hydrogenated to a liquid hydrocarbon. Ground coal was mixed with a middle oil in a 1:2 ratio and heated to 400-420°C at 100 atmospheres. The solution was filtered to remove ash and the solvent was recovered by vacuum distillation. Kloepper et al. (2) have carried out extensive research on the solvent refining process. The ash content of a raw coal was reduced from 12% to 0.2%, with a concurrent reduction in total sulfur content from 1.4% to 0.5%. The Pittsburgh and Midway Coal Mining Company (3,4,5,6) developed a solvent refining process that used an internally generated solvent and hydrogen to dissolve the coal and produce a low-ash, low-sulfur coal. Cudmore and Guyot (7) studied the solvent extraction of coal under a hydrogen blanket using anthracene oil as a solvent. The total sulfur content of a raw coal was reduced from 1.1% to 0.4% in a batch autoclave. Gary et al. (8) have studied the solvent refining process in batch autoclaves, using anthracene oil as the solvent, with the distribution of all sulfur types (total, organic, pyritic, sulfate) in the refined coal product being investigated.

Kirchner (9) studied solvent type, solvent-to-coal ratio and coal rank in a statistically designed set of experiments to determine the effects of these three variables on the removal of total sulfur, organic sulfur, and inorganic sulfur (sulfate and pyritic) from four raw coals. The analysis of the data showed both solvent type and coal rank to be statistically significant at the 0.95 confidence level for the removal of sulfur from coal.

Ferrall (10) also studied the desulfurization of coal in anthracene under a hydrogen blanket and found that pressure and temperature were significant variables in the process, but that reaction times in excess of 15 minutes were not statistically significant.

Desulfurization by Other Methods

The Atlantic Richfield Company (11) was granted a patent for a process which simultaneously desulfurizes and deashes coal. Total sulfur content was reduced by 54% and ash content by 27% by simply treating the coal in a batch reactor for one hour with water at 650°F and a pressure of 2350 psig. Flotation methods have been examined and developed by Miller and Baker (12), Galiguzov (13), Leonard and Cockrell (14) and Terchik (15). Deurbrouck (16) made an extensive computer study of the removal of pyritic sulfur by flotation. A carbonization process was used by Van Hoessle and Quadri (17) to produce a smokeless fuel from sub-bituminous coal

and resulted in a 95% reduction of pyritic sulfur and 60-70% reduction on both organic and sulfate sulfur. Alkali metal hydroxides have been used by Murphy and Messman (18) in a patented process that reduces the total sulfur content of coal by 35-50%. A process has been patented by Lefrancois, Barclay and Van Hook (19), in which sulfur is leached from coal with a sodium carbonate melt. Nagy and Ezz (20) studied the thermal desulfurization of ultra-high sulfur-petroleum coke, while Sinha and Walker (21,22) carried out extensive research on the desulfurization of coals and chars using various gaseous atmospheres at temperatures ranging from 350 to 600°C.

Pyritic Sulfur Removal

Given and Jones (23) have found that some of the pyritic sulfur released is fixed in the organic matter of coal and contributes to the higher organic sulfur content of the treated coal. This observation agreed with results reported by Smith (24). Hydrogen contacting was used by McKinley and Henke (25) in a patented process achieving a 53% sulfur removal on a coal with high pyritic sulfur content. Blum and Cindea (26) optimized an air-stream fluidized process and reported removal of up to 90-95% of the pyritic sulfur. Abel et al. (27) used a centrifugal-electrostatic method with stage grinding and removed 50-70% of pyritic sulfur and 30-40% total sulfur. Nearly 90% of the pyritic sulfur was removed from a Pittsburgh seam roof coal with this technique. Meyers et al. (28) achieved a 40-70% sulfur reduction on coal by treatment with a ferric ion solution. The pyritic sulfur in the coal matrix was oxidized and elemental sulfur and iron sulfate were recovered. A subsequent patent was issued to Meyers (29). Further work on the Meyers process has been done by Hamersma et al. (30).

Organic Sulfur Removal

A U.S. patent was granted to Mayland (31) for a pebble heated gasification unit. Mayland observed that a major portion of the organic sulfur in the coal was converted to H_2S during the process. Mukai and his co-workers (32) reported that they removed 100% of the organic sulfur from a bituminous coal by treating at room temperature with a 3% solution of hydrogen peroxide. Meyers, Laud, and Flegal (33) investigated several coals, and found that leaching with a weak organic acid would remove 45-80% of the organic sulfur. Phenyl-nitrate was the most efficient solvent tested for organic sulfur removal and a patent was later issued to Meyers (34). Organic sulfur removal from coal has also been investigated by Kawinskii (35).

Catalyst Application

Winkler (36) found that an activated iron powder catalyst used on finely ground bituminous coal in a hot, highly aromatic oil can

reduce the coal's total sulfur content by 56%. A French patent was granted to Fohlen (37), who lists catalysts capable of splitting organic sulfur linkages prior to desulfurization. These catalysts include the oxides and salts of calcium, magnesium, lead, copper, zinc, and molybdenum. Manmohan and Goswami (38) found that sodium chloride gave 80% total sulfur removal during carbonization. Depolymerization catalysts for coal have been studied by Ouchi, Imuta, and Yamashita (39).

Kinetic Considerations

The kinetic studies of the dissolution of bituminous coal in tetralin by Hill (40) have shown that the ΔH (heat of activation) and ΔS (entropy of activation) can be determined from the temperature dependence of the rate. Kloepper et al. (2) concluded the transfer of hydrogen from the solvent phase was the most important mechanism of free radical termination for the dissolved coal. Formation of low molecular weight compounds during the dissolution of coal at high temperatures was favored by using a solvent which transfers hydrogen or by having available a highly active hydrogen atmosphere during the reaction. The amount of coal in solution increased markedly with an increase in the partial pressure of hydrogen in a batch autoclave system. Charlot (41) observed the dissolution process had an average activation energy of 7 kcal/mole.

Non-isothermal reaction kinetics have been used in the study of coal gasification and desulfurization by Juntgen et al. (42), and Vestal and Johnson (43). Hill (40) studied the dissolution of coal in tetralin solvent, and proposed a multiple reaction scheme that involves a series of first order reactions and increasingly active intermediates as chemical bonds are broken at high temperatures.

Effect of Hydrogen

Blackwood and McCarthy (44) considered the reaction of coal and hydrogen to be a two-stage process, with the first step being very rapid hydrogenation of the oxygen-containing functional groups of the coal, followed by a slow reaction between the hydrogen and residual char. The hydrogen in the process served two purposes: to saturate the solvent used, and to form H_2S with sulfur compounds present. Curran et al. (45) found that very little hydrogen transfer was necessary to dissolve the first 50% of the coal but the amount of hydrogen required increased by a factor of seven for the next 50% of the coal. They proposed the dissolution was a pseudo-first order reaction.

Cudmore and Guyot (7), in their study of the dissolution of coal in anthracene oil, noted the overall heat of combustion of the products exceeds the heat of combustion of the reactants. Kloepper et al. (2) also found the solvent refined coal to have a heating value 20% higher than that of the parent coal. Kloepper

et al. (2) attributed this effect to the loss of oxygen and sulfur atoms from the coal matrix during the treatment, which left polynuclear aromatic products in the solvent-refined coal product. These compounds have very high resonance energies, and therefore a high heat of combustion. This conclusion is supported by Cudmore and Guyot (7), who observed an enrichment in polycyclic aromatic compounds in their solvent refined product and a corresponding increase in the heating value of the treated coal.

Hydrogenation of coal in tetralin solvent has been studied by Potzieter (46), and Liebeuberg and Potzieter (47). Kirk and Seitzer (48) studied the hydrogenation process at 750-840°F and 2500 psig, with a liquid product resulting.

Choice of Organic Solvent

Orechkin (49) found the presence of hydrogen in the reaction atmosphere is not always required for an effective extraction. Solvents of sufficiently high hydrogen content may effectively dissolve the coal; however, the average molecular weight of the product is high due to the fact that hydrogen required to reduce the coal to low molecular weight compounds is supplied entirely by the solvent and this quantity is limited by the solvent characteristics, especially the degree of unsaturation.

STATISTICAL THEORY

The goal of the Phase II experimental investigation was to examine the non-linearity of coal desulfurization via the solvent refining process, as a function of the operating variables found to be important in the Phase I experimental program. Phase I investigated five operating variables at two levels, and a full factorial experimental design was completed to allow all main effects and interactions to be statistically examined for importance. Four coals were studied, two bituminous and two sub-bituminous with sulfur contents ranging from 0.76% to 4.20%. Variables and levels studied were as follows:

1) Temperature: 325, 400°C
2) Partial pressure of hydrogen: 600, 1200 psi
3) Solvent-to-coal ratio: 3/1, 4.5/1
4) Solvent type: Anthracene, tetralin
5) Time (at reaction temperature): 7.5, 15 minutes

The statistical reduction of the Phase I data was accomplished by Yates' technique, and the sum of the four and five-factor interactions was lumped to give an estimate of the error mean square. "F" tests were then performed on the mean squares for the main effects and interactions (through order 3), and the following results were obtained:

I. Variables Very Highly Significant (99% confidence level)
   A. Bituminous
      1. Solvent type
      2. Temperature
   B. Sub-bituminous
      1. Solvent type
      2. Temperature

II. Variable Highly Significant (95% confidence level)
   A. Bituminous
      1. Solvent type
      2. Temperature
   B. Sub-bituminous
      1. Solvent type
      2. Temperature
      3. Solvent type/temperature interaction

III. Variables Significant (90% confidence level)

A. Bituminous

1. Solvent type
2. Temperature
3. Solvent type/temperature interaction

B. Sub-bituminous

1. Solvent type
2. Temperature
3. Solvent type/temperature interaction
4. Solvent-to-coal ratio
5. Pressure

Accordingly, the solvent type for the Phase II study was fixed as anthracene oil (the better Phase I solvent) and the variables temperature, pressure and solvent-to-coal ratio were chosen for further investigation in the non-linearity studies of Phase II.

The Phase II non-linearity studies consisted of two major parts, the first being a re-examination of the significance of the three process variables chosen for study, and the second being mathematical modeling of the process based on the results of the Phase II significance tests. A full-factorial, triply-replicated experimental design of the three variables at three levels allowed all the necessary data to be gathered for the significance testing and mathematical modeling. The design was applied to one bituminous and one sub-bituminous coal. Variables and levels chosen were as follows:

1) Temperature: 375, 400, 425°C

2) Partial pressure of hydrogen (at reaction temperature): 1000, 1500, 2000 psi

3) Solvent-to-coal ratio: 2/1, 3/1, 4/1

The data from the Phase II experimental design were initially reduced by hypothesis testing, and outliers were identified and rejected from the data field. An analysis of variance on the experimental design was then performed by means of constructing comparisons from a table of orthogonal polynomials. A Fortran computer program allowed the data and the orthogonal polynomials to be manipulated, and the sum of squares of each main effect and interaction (through second order) to be calculated. An estimate of the mean square error was then obtained from the sum of squares within treatments, and "F" tests allowed the significance levels for the main effects and interactions to be identified for each data set. Data sets collected from the Phase II study were as follows:

A. Bituminous Coal

1. Sulfate sulfur
2. Pyritic sulfur
3. Organic sulfur
4. Total sulfur

B. Sub-bituminous Coal

1. Sulfate sulfur
2. Pyritic sulfur
3. Organic sulfur
4. Total sulfur

Mathematical modeling of the solvent refining process will next be attempted using the main effects and interactions found to be important in the significance tests as the independent variables for the model. The Omnitab computing programs will be used to fit the data by means of multiple linear regression, and models and terms will be accepted or rejected based on the significance of the regression coefficients and the goodness of fit as indicated by the multiple correlation coefficient. Models of the following form will be investigated:

$$Y_i = \alpha_i + \beta_i X_1^{m_1} + \gamma_i X_2^{m_2} + \ldots \zeta_i X_n^{m_n}$$

where Y_i = sulfur removal, %, dependent variable

$\alpha_i, \beta_i, \gamma_i \ldots \zeta_i \equiv$ regression coefficients

$X_1, X_2 \ldots X_n$ = independent variables and interactions from significant tests

$m_1, m_2 \ldots m_n$ = exponents of the effects and interactions

Equipment

Four major equipment systems were employed in the study, the reactor system, the off-gas scrubber system, the solvent recovery system, and the LECO total sulfur analysis system. A brief description of the components of each system is given below.

Three reactor systems were used in the study, all of the batch autoclave generic type. For each reactor system, a gas delivery system, a reaction vessel, and a shaking assembly existed as a functional part of the experimental complex. The reaction vessels were manufactured by the American Instrument Company (Aminco) of Silver Spring, Maryland, and were from the 4 3/8 inch series. The reaction vessels had inside depths of 10 inches, inside diameters of 3 5/16 inches and approximate weights of 50 pounds. The vessels had a working pressure rating of 5,050 psi at 100°F and had effective volumes of approximately 1410 milliliters.

Three shaking assemblies were employed in the reactor complex. Two of the assemblies were standard Aminco 4 3/8 inch series assemblies while the other was manufactured by High Pressure Equipment Company, Inc. The shaking assembly from HIP Company of Erie, Pennsylvania, consisted of a 6,000 watt, 208-volt heating jacket mounted on a rocker assembly. The heating jacket was rocked by means of a 1/3 hp, 220 volt electric motor actuating an eccentric lever drive connected to the heating jacket. The Aminco shaking assemblies consisted of 3000 watt, 208-volt heating jackets mounted on rocker assemblies. The rockers for the Aminco shaking assemblies were actuated by 1/3 hp, 110 volt motors driving eccentric levers connected to the heating jackets. The low voltage heating jackets had the capacity to heat from room temperature to 400°C in approximately 1 1/2 hours while the high voltage HIP heating jacket could heat from room temperature to 400°C in about 2 1/4 hours. All shaking assemblies were equipped with 0 to 3000 psi pressure gauges; and 30,000 psi valves and fittings from the Aminco line were used to regulate the inlet and exit of the reaction gases from the reaction vessels. Tubing used on the shaking assemblies was 304 stainless steel, 1/4 inch o.d., and rated for operation at 100,000 psi at 100°F.

In the 6000-watt system the temperature was controlled by a Leeds and Northrup, Series 60 controller, with a Model 11906 SCR final control element. Temperature response of the reaction vessel was recorded on a Leeds and Northrup Speedomax H continuous recorder. In the 3000-watt systems, Leeds and Northrup Electromax III controllers, with Model 11906 SCR final control elements were used for temperature control. Temperatures were recorded on a Honeywell Electronik III two-channel continuous recorder.

All shaking assemblies were connected to purging-charging gas delivery systems. Each of these systems consisted of a nitrogen cylinder, a hydrogen gas cylinder, pressure regulators for each cylinder and Aminco stainless steel tubing and fittings similar to those used on the shaking assemblies.

A diagram of the off-gas collection system is given in Figure 1. A 0-3000 psig Duragauge pressure gauge was used to measure pressure. Reaction vessel temperature was measured by a Foxboro Dynalog 6-point circular recorder with a range of 0 to 400°C. Thermocouples used as temperature sensors were iron-constantan. The collection vessel was a 250-ml Erlenmeyer flask agitated by means of a magnetic stirrer. Gas volume was measured using water displacement in a 250-ml graduated buret.

The solvent recovery system used is shown in Figure 2. The distillation vessel was a 500-ml Hempel flask. The vessel was heated using a 330 watt, 115 volt heating mantle controlled with a Powerstat, a 110-volt and 7 1/2 amp variable transformer. Two 1000-ml flasks were used to trap the reclaimed solvent. A condenser was used to prevent any low boiling solvent fractions from

FIGURE 1
SCRUBBER COLLECTING SET-UP

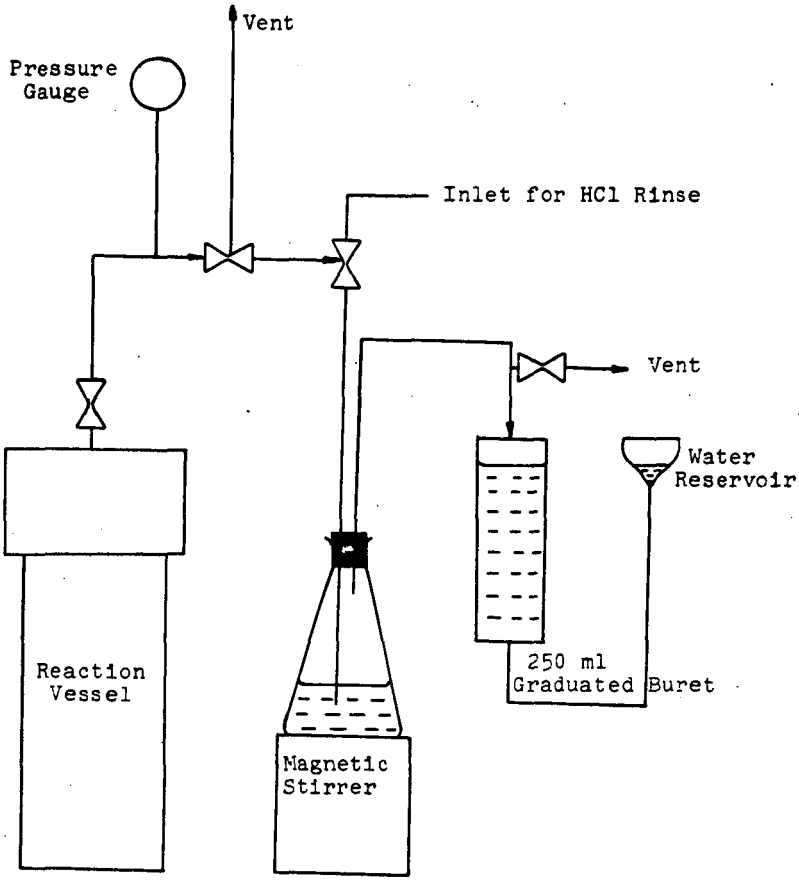

FIGURE 2
SOLVENT RECOVERY SYSTEM

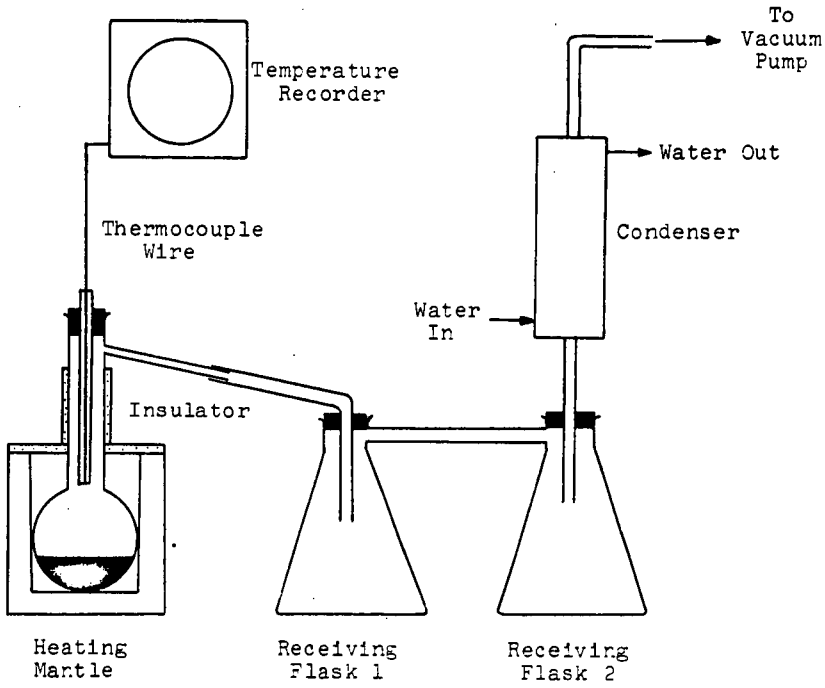

leaving the distillation system and entering the vacuum pump. The vacuum for the system was supplied by a Cenco Mega-Vac pump driven by a 1/4 hp, 110 volt electric motor. The vacuum on the system was measured with a 0 to 30 in. Hg Duragauge vacuum gauge. The temperature of the distillation flask was continuously monitored by a Foxboro Dynalog 6-point circular chart recorder. Iron-constantan type thermocouples were used for the input to the recorder.

The Leco total sulfur analysis system consisted of three components, a gas purification train, an induction furnace, and a semi-automatic titrator unit. The gas purifying train contained an acid tower, a dry reagent tower, and a rotameter and was used to measure and scrub any residual sulfur from the entering oxygen. The induction furnace was a Leco model 521, equipped with the "L" modification on the combustion chamber. A special feature of the "L" modification is the inclusion of a high temperature igniter in the combustion chamber. The exhaust gases from the induction furnace combustion chamber were sent through an electrically heated glass delivery tube and into the Leco semi-automatic titrator model 518. The semi-automatic titrator used an idiometric reaction with a color change endpoint to analyze the combustion gases. The titrator proved to be a rapid and reliable method for analyzing the solvent for total sulfur.

Experimental Procedure

An overall view of the experimental procedure, including stages at which sulfur analyses are performed, is given by Figure 3. The experimental procedure can be divided into four major areas of discussion: sulfur analysis, desulfurization procedure, off-gas collection, and solvent recovery. The desulfurization procedure is given below.

a) Fifty grams of raw dried coal, -28 mesh, and the appropriate amount of solvent (100, 150, or 200 grams of anthracene oil) are weighed, mixed, and placed in the reaction vessel.

b) The reaction vessel is sealed and connected into the heating-rocking assembly.

c) The reaction vessel is purged with nitrogen by pressurizing the system to 200 psig and venting to atmospheric pressure three consecutive times. After purging, the system is pressurized with hydrogen; the initial pressure is predetermined and is a function of run temperature, run pressure, compressibility factors, and initial temperature. At this time initial pressure and temperature are recorded, and the system is checked for leaks.

FIGURE 3
SOLVENT REFINING PROCESS FLOWSHEET
COAL DESULFURIZATION

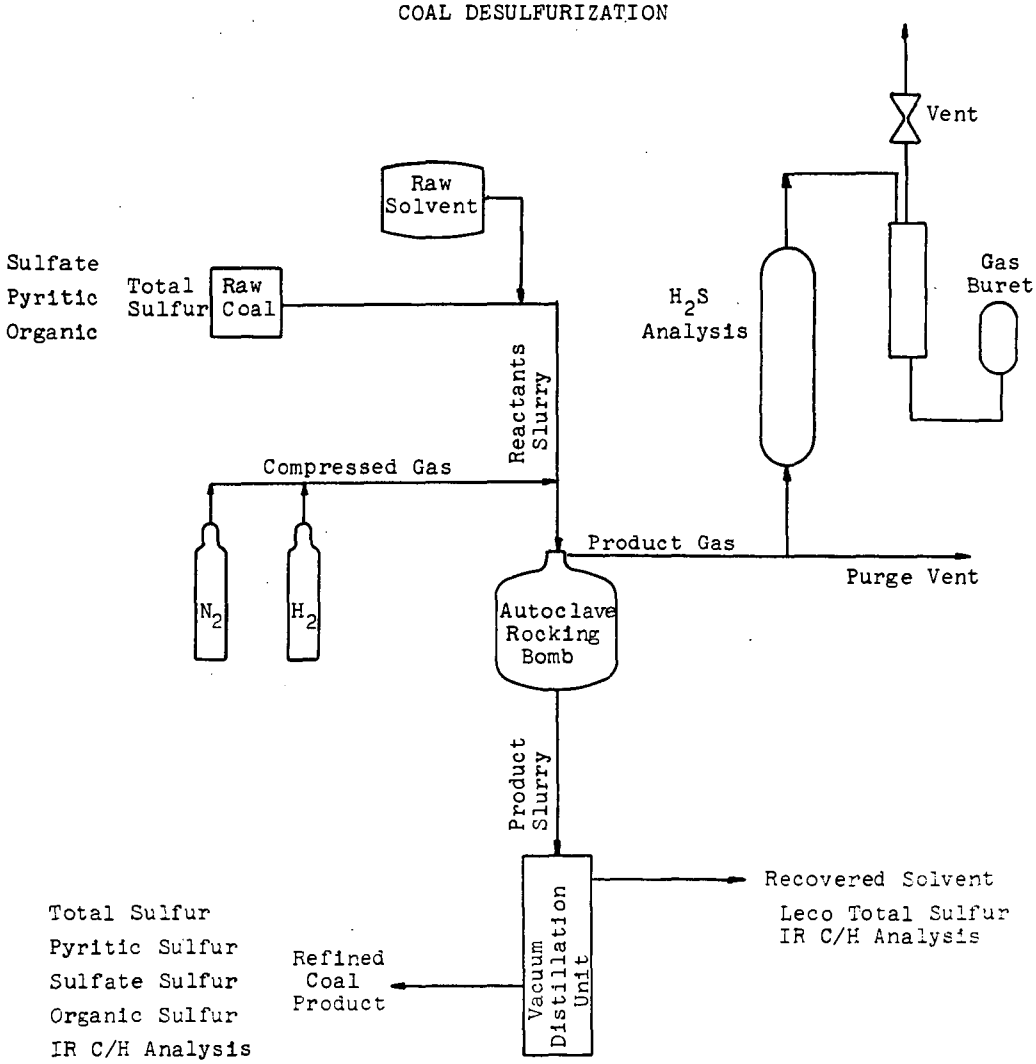

d) The temperature recorder, control system, rocker assembly, and the reactor heaters are switched on and heating begins. When the system reaches the desired maximum temperature, the pressure of the reaction vessel is recorded. The reactor is held at the maximum temperature for 15 minutes; at this time the system temperature and pressure are again recorded.

e) The reaction vessel, still pressurized, is removed from the heating-rocking system and cooled by forced convection.

The off-gas collection step is given by the following procedure:

a) The pressurized reaction vessel is connected to the scrubber system (see Figure 1).

b) Reaction vessel temperature and pressure, ambient temperature, and barometric pressure are recorded. Four gas samples are bubbled through the scrubber solution, an ammonical zinc sulfate solution. The volume of gas is determined by water displacement.

c) The reaction vessel is vented and disconnected from the scrubber system.

A diagram of the solvent recovery system is given by Figure 2. The solvent recovery technique utilized vacuum distillation to separate the anthracene oil from the solvent refined coal product.

a) The product-solvent slurry is removed from the reaction vessel, placed in a 500-ml Hempel distillation flask, and weighed.

b) The flask is placed in the heating mantle, and connected to the vacuum system.

c) The heating mantle is turned on and the system is heated.

d) At approximately 150°C the vacuum pump is turned on and a vacuum is slowly drawn.

e) The distillation is completed at approximately 300°C and 3 mm Hg pressure.

f) The solvent recovered in the receiving flasks is removed for weighing.

g) The solvent refined coal product is taken from the flask, weighed, crushed, and placed in a sealed sample bottle for further use.

The following analysis techniques were used for sulfur determination:

I. Total sulfur - Eschka method ASTM D 271 - 68

II. Inorganic sulfur

A. Pyritic - ASTM D 2492 - 68
B. Sulfate - ASTM D 2492 - 68

III. Organic - Difference (I - II)

IV. H_2S - An adaptation of ASTM D 2385 - 66 as developed by Pittsburgh and Midway Coal Mining Co., Merriam, Kansas

V. Solvent sulfur content - LECO method ASTM D 1552 - 64.

RESULTS

A Fortran-IV computer program has been written to perform the analysis of variance (ANOVA) calculations described in the statistical analysis section. Table I presents the results from the ANOVA study performed on the Phase II experimental results.

For both the bituminous and sub-bituminous coal, the pyritic sulfur analysis and the sulfate sulfur analysis showed none of the effects studied to be significant. This result indicates that within the limits of variation of the three variables, temperature, pressure, and solvent to coal ratio, no trend in sulfate sulfur or pyritic sulfur removal could be statistically determined as a function of these operating variables. The results do not indicate that there was no removal of pyritic or sulfate sulfur. For example, initial calculations for the bituminous coal show maximum pyritic sulfur removal to be approximately 70 percent.

The ANOVA calculations for total sulfur removal in the bituminous coal showed the following effects to be significant at a 90% confidence level: the linear temperature effect; the linear temperature, quadratic pressure interaction effect; and the linear temperature, quadratic pressure, and linear solvent-to-coal ratio interaction. These interactions were also shown to be significant for the ANOVA calculations for the bituminous coal organic sulfur removal. Since no effects were significant for the pyritic and sulfate sulfur; and the organic sulfur removal is determined by the difference in total sulfur removal and pyritic plus sulfate sulfur removal, the covariance between the total sulfur removal and organic sulfur removal is statistically correct and expected.

The ANOVA calculations for the total sulfur removal in the sub-bituminous coal showed the following effects to be significant at a 90% confidence level: the linear temperature, quadratic pressure interaction; and the linear temperature, quadratic pressure, and linear solvent-to-coal ratio interaction. For the organic sulfur removal only the linear temperature, quadratic pressure interaction was shown to be significant. These results are also statistically expected.

Further results will be presented after the mathematic modeling work is completed.

TABLE I

Phase II Results - Effects Significant in ANOVA Calculations

where: T = Temperature
P = Pressure
S = Solvent to Coal Ratio
L = Linear Effect of Variable
Q = Quadratic Effect of Variable

		Significant @		
		90%	95%	99%
Sulfur Type	Effect	$F(90\%)=2.805$ 1,54	$F(95\%)=4.026$ 1,54	$F(99\%)=7.148$ 1,54
Bituminous Coal				
Total Sulfur	T_L	Yes	No	No
	$T_L P_Q$	Yes	Yes	No
	$T_L P_Q S_L$	Yes	No	No
Sulfate Sulfur	None			
Pyritic Sulfur	None			
Organic Sulfur	T_L	Yes	No	No
	$T_L P_Q$	Yes	Yes	No
	$T_L P_Q S_L$	Yes	No	No
Sub-Bituminous Coal				
Total Sulfur	$T_L P_Q$	Yes	Yes	Yes
	$T_L P_Q S_L$	Yes	No	No
Sulfate	None			
Pyritic	None			
Organic	$T_L P_Q$	Yes	No	No

REFERENCES CITED

1. Lowry, H. H., and Rose, H. J., Pott-Broche coal extraction process and plant of Ruhrol G.M.B.H., Bottrop-Welheim, Germany: U.S. Bureau of Mines I.C. 7420, 1947.

2. Kloepper, D. L., Rogers, T. F., Wright, C. H., and Bull, W. C., Solvent processing of coal to produce a deashed product: U.S. Department of Interior, Office of Coal Research, Research and Development Report no. 9, 1965.

3. Pittsburgh and Midway Coal Mining Co., Economic evaluation of a process to produce ashless, low-sulfur fuel from coal: U.S. Dept. of Interior, Office of Coal Research, R. and D. report no. 53, Interim report no. 1, 1970.

4. _____ Development of a process for producing an ashless, low-sulfur fuel from coal - Design of pilot plant: U.S. Dept. of Interior, Office of Coal Research, R. and D. report no. 53, Interim report no. 2, 1971.

5. _____ Development of a process for producing an ashless, low-sulfur fuel from coal - Volume I - Engineering Studies, Part II, C.O.G. Refinery Economic Evaluation, Phase I: U.S. Dept. of Interior, Office of Coal Research, R. and D. report no. 53, Interim report no. 3, 1971.

6. Pittsburgh and Midway Coal Mining Co., Development of a process for producing an ashless, low-sulfur fuel from coal - Volume I - Engineering Studies, Part 3, C.O.G. Refinery Economic Evaluation - Phase II: U.S. Dept. of Interior, Office of Coal Research, R. and D. report no. 53, Interim report no. 4, 1972.

7. Cudmore, J. F., and Guyot, R. E., Solvent extraction of coal, batch autoclave studies: Australian Coal Industry Research Laboratories, Ltd., P.R. 67-6, 1967.

8. Gary, J. H., Baldwin, R. M., Bao, C. Y., Kirchner, M. S., Golden, J. O., Removal of sulfur from coal by treatment with hydrogen - Phase I: The effect of operating variables and raw material properties: Office of Coal Research, R. and D. report no. 77, Interim report no. 1, 1973.

9. Kirchner, M. S., The effects of solvent to coal ratio solvent type, and coal rank on coal desulfurization by hydrogen treatment: Unpublished M.S. Thesis, Arthur Lakes Library, Colorado School of Mines, Golden, Colorado, 1973.

10. Ferrall, J. F., Desulfurization by hydrogenation of coal in solution: Unpublished M.S. Thesis, Arthur Lakes Library, Colorado School of Mines, Golden, Colorado, 1972.

11. Rieve, R. W., Coal upgrading: U.S. Patent 3,660,054, 1972.

12. Miller, K. J., and Baker, A. F., Removal of pyrite from coal by froth flotation: U.S. Natl. Tech. Inform. Serv., P. B. rep. no. 208015, 1972.

13. Galiguzov, N. S., Laws governing the behavior of coal pyrite in flotation and practical directions for desulfurization of coal by flotation: Obogashch. Britket. Uglei, no. 17, 59-68, 1961.

14. Leonard, J. W., and Cockrell, C. F., Pyritic sulfur removal from coal: Mining Congr. J., v. 56, no. 12, 65-70, 1970.

15. Terchik, A. A., Sulfur reduction through improved coal washing practices: Mining Congr. J., v. 57, no. 7, 48-55, 1971.

16. Deurbrouck, A. W., Sulfur reduction potential of the coals of the United States: Bureau of Mines Report of Investigation no. 7633, 1972.

17. Van Hoessle, H. H., and Quadri, S. A. A., Upgrading and desulfurization of West Pakistan coals: Pakistan Jour. Science Ind. Res., no. 5, 119-123, 1962.

18. Murphy, R. M., and Messman, H. C., Desulfurization of carbonaceous materials: U.S. Patent 3,387,941, 1968.

19. Lefrancois, P. A., Barclay, K. M., and Van Hook, J. P., Recovery of sulfur values from sulfur-bearing carbonaceous materials: U.S. Patent 3,567,377, 1971.

20. Nagy, E. K., and Ezz, A. F., Thermal desulfurization of ultra-high-sulfur petroleum coke: Fuel, v. 52, 128, 1973.

21. Sinha, R. K., and Walker, P. J. Jr., Removal of sulfur from coal by air oxidation at 350-450°C: v. 51, 1972.

22. Sinha, R. K., and Walker, P. L. Jr., Desulfurization of coals and chars by treatment in various atmospheres between 400 and 600°C: Fuel, v. 51, 329-331, 1972.

23. Given, P. H., and Jones, J. R., Attempted removal of sulfur from coal and coke: ACS, Division of Fuel Chemistry, Preprints, v. 8, no. 3, 185-191, 1964.

24. Smith, G. A., The effects of heat and pressure on the sulfur compounds in coal: Jour. Chem. Mett. Mining Soc., South Africa, no. 42, 149-168, 1941.

25. McKinley, J. B., and Henke, A. M., Desulfurization of coal: U.S. Patent 2,726,148, 1955.

26. Blum, I., and Cindea-Munteau, V., Desulfurization of coals at low temperatures by gaseous desulfurization agents: Acad. Rep. Populace Rimine, Inst. Energet., Studii Cercetari Energet., v. 11, 325-343, 1961.

27. Abel, W. T., Zulkoaki, M., and Gaurtlett, G. J., Dry separation of pyrite from coal: Industrial Energy Engineering, v. 11, no. 3, 342-347, 1972.

28. Meyers, R. A., Hauiersma, J. W., Laud, J. S., and Kraft, M. L., Desulfurization of coal: Science, v. 177, 1187-1188, 1972.

29. Meyers, R. A., Pyritic sulfur removal from coal using a solution containing Fe^{+++}: Ger. Offen. 2,207,491, 1972.

30. Hamersma, J. W., Kraft, M. L., Koutsoukos, E. P., and Meyers, R. A., Chemical removal of pyritic sulfur from coal: Am. Chem. Soc., Div. of Fuel Chem., Preprint, vol. 17, no. 2, 1-14, 1972.

31. Mayland, B. J., Pebble heater adapted to coal gasification: U.S. Patent 2,657,501, 1953.

32. Mukai, S., Araki, Y., Konishi, M., and Otomura, K., Desulfurization of coal with some oxidizing agents: Nenryo Kyohai-shi, v. 48, no. 512, 905-910, 1969.

33. Meyers, R. A., Laud, J. D., and Flegal, C. A., Chemical removal of nitrogen and sulfur from coal: U.S. Natl. Tech. Inform. Serv., v. 72, no. 3, 189, 1972.

34. Meyers, R. A., Solvent extraction of organic sulfur and nitrogen compounds from coal: Ger. Offen. 2,108,786, 1971.

35. Kawinski, V. S., Removal of organic sulfur from coals: Khim. Tverd. Topl., v. 4, 143-5, 1972.

36. Winkler, J., Desulfurization of coal-oil mixtures by attrition grinding with activated iron powder: ACS, Division of Fuel Chemistry, Preprints, v. 12, no. 4, 19-28, 1968.

37. Fohlen, J. L., Desulfurization of coal-distillation products: French Patent 853,404, 1940.

38. Manmohan, R., and Goswami, M. N., Actions of different catalysts on desulfurization of Assam coal: Science and Culture, v. 19, 151-152, 1953.

39. Ouchi, K., Imuta, K., and Yamashita, Y., Catalysts for the depolymerization of mature coals: Fuel, v. 52, 156-157, 1973.

40. Hill, G. R., Experimental energies and entropies of activation - Their significance in reaction mechanism and rate prediction for bituminous coal dissolution: Fuel, v. 45, no. 4, 329-340, 1966.

41. Charlot, L. A., The kinetics of thermal dissolution of a Utah bituminous coal: M.S. thesis, U. of Utah, 1963.

42. Juntgen, H., Van Heek, K. H., and Klein, J., Comparative investigations into the kinetics of gasification with steam or hydrogen and conclusions for gasifier design: Gordon Research Conference on Coal Science, New Hampton School, New Hampton, New Hampshire, July 1973.

43. Vestal, M. L., and Johnson, W. H., Chemistry and kinetics of the hydrodesulfurization of coal: Am. Chem. Soc., Div. of Fuel Chem., Preprint, v. 14, no. 1, 1-11, 1970.

44. Blackwood, J. D., and McCarthy, D. J., The mechanism of hydrogenation of coal to methane: Australian Jour. of Chemistry, ch. 19, 797-813, 1966.

45. Curran, G. P., Struck, R. T., and Gorin, E., The mechanism of hydrogen transfer process to coal and coal extract: Symposium on Pyrolysis Reactions of Fossil Fuels, Pittsburgh, Penn., ACS, v. 10, no. 2, 1966.

46. Potzieter, H. G. J., Kinetics of conversion of tetralin during hydrogenation of coal: Fuel, v. 52, 134, 1973.

47. Liebeuberg, B. J., and Potzieter, H. G. J., The uncatalysed hydrogenation of coal: Fuel, v. 52, 134, 1973.

48. Kirk, M. C. Jr., and Seitzer, W. H., Coal hydrogenation process: U.S. Patent 3,594,303, 1971.

49. Orechkin, D. B., On the role of reduction processes in the early stages of the thermal decomposition of coal: Akad. Nauk. SSSR, Trudy Vostochno-Sibirskogs Filiala, Seriya Khimicheskaya, v. 3, 105-126, 1955.