Filterability of a Coal-Derived Liquid

Murray Weintraub, Milton J. Weiss,
Sayeed Akhtar and Paul M. Yavorsky

U.S. Energy Research and Development Administration
Pittsburgh Energy Research Center
4800 Forbes Avenue
Pittsburgh, Pennsylvania 15213

INTRODUCTION

All coal liquefaction processes must somewhere face the problem of separating unliquefied coal and the mineral matter that entered the process with the coal, from the liquid stream that contains the product. One of the major advantages of the Synthoil process now being developed by ERDA, as reported by Yavorsky et al (3), is that it is quite tolerant of imperfections in the solids removal step, as both the product and the recycle stream are acceptable with as much as 10 pct undissolved material. However, a number of major advantages will be obtained when the present solids removal system is improved or replaced:

(1) Although Synthoil ash values are low--in an experiment reported by Yavorsky et al (4) a Kentucky coal containing 16.9 pct ash yielded a product oil with 1.5 pct, which represents excellent quality for a furnace designed to accept coal--reduction to below 0.1 pct will obviate the inclusion of electrostatic precipitators in the furnace, thus reducing capital costs in product utilization.

(2) An ash content in the final product of less than .005 pct will meet specifications for gas turbine fuel, (1), thus greatly expanding the area of interchangeability between Synthoil and scarce petroleum products.

(3) Reduction in the amount of organic insolubles will further reduce the sulfur content of the product, since the residual sulfur is concentrated in this component.

(4) Alternate systems, even if they should not improve the quality of the product, may yield substantial reductions in operating and capital costs.

Solids separation from coal liquefaction products is a difficult step because of the small particle size (2), variously estimated at mean diameters from 5 to below 0.5 micrometers, wide particle size distribution, from 25 micrometers down to colloidal size, low density difference between particle and liquid, physicochemical affinity between particle and liquid, and high liquid viscosity. We have examined the problem of improving product quality with centrifugation and with three approaches to filtration: (1) a bench filter consisting of a small pressure vessel with a perforated closure to support a 1.4-inch-diameter (0.0107 sq ft) filter medium of cloth, screen, filter paper or "precoat", a powder frequently used industrially as an easily renewable filter medium; (2) a tubular unit in which 0.7 sq ft of cloth filter medium in the form of a bag or sock is supported on a perforated steel tube so that the cloth can withstand high pressure differentials; and (3) a rotary drum pressure filter with 4.7 sq ft of filter surface, capable of operation as either a cloth filter or precoat filter. All three units are operable at 200° C and 200 psig.

Although there was some overlap, each unit was assigned different functions in the research. This paper describes the work with the bench filter. The bench filter was used to establish basic principles in Synthoil filtration that would be applicable

to the engineering of the various commercial forms of filters. With the bench filter we have shown that filtration is a feasible approach to ultra-low-ash Synthoil, that non-Newtonian behavior of Synthoils must be considered in analyzing Synthoil filtration, that the filter medium which is initially installed in the filter controls the initial flow rate and the length of time required to build up a cake of the Synthoil residue (during which time the quality of the filtrate may be poor), after which flow rates and product quality are relatively independent of the initial medium and depend mostly on the quality and integrity of the cake. Tests with a precoat medium showed that a sharp demarkation could be obtained between the precoat and filter cake, indicating that a continuous system could be operated with good filtration and economic use of the precoat material.

Experimental Procedures

The basic piece of equipment is shown in figure 1. It consists of a perforated plate to support the filter medium screwed to a steel case which can be pressurized with nitrogen to drive the filtrate through the medium. A top opening provides for insertion of a thermocouple. The assembled unit can be inserted in a vertical 2-inch-diameter tube furnace for operation at elevated temperature. The experiments that were conducted in this equipment can be subdivided into five groups listed in table 1. Groups I, III and IV used a standardized feed (designated FB-36) which

TABLE 1.- Experimental series in filtration

Group	Table No.	Reed	Filter Material
I	2	FB-36	Filter paper 41H
II	3	Varied	Other sheet materials
III	4	FB-36	Precoat on paper
IV	5	FB-36,38	Precoat on 100-mesh screen
V	-	Varied	Varied

was a very viscous Synthoil product, almost solid at room temperature, that had been produced at 3,000 psi and 435° C from a Western Kentucky coal and contained 5.7 pct ash and 1.0 pct sulfur. These high values of viscosity, ash and sulfur represent what we expect to be the most difficult filtration parameters that would be met in the Synthoil process. Group II used other feeds in addition to FB-36.

The first group of experiments consisted of filtering FB-36 through a standard laboratory filter paper (Whatman 41H)* at various temperatures, pressures and filter cake thicknesses, and measuring flow rates and quality of product. In Group II the Whatman 41H paper was replaced by other sheet filter materials. A major industrial filtration technique is the use of rotary filters with "precoats" in which the filter medium is a layer of granular material such as diatomaceous earth. In the third group of experiments, two such materials were used as a layer on top of filter paper and in the fourth group, the precoat materials were used on top of an open screen (100 mesh), without paper as a second medium. In both these groups the variables included coarseness of the precoat material and the thickness of the precoat as well as those variables measured in the previous groups. The fifth group comprised experiments in which the feed materials were other than FB-36. These data are not constituted into a separate table but are incorporated into the other tables.

* Appearance of commercial or trade names does not imply endorsement of the products by the U.S. Government or ERDA. Such names are used only for identification.

The initial experiments on filter paper, for which the data in table 2 are

TABLE 2.- Effect of pressure and temperature on Synthoil filtration through filter paper 41H

Feed: FB-36, Ash 5.7%, Sulfur 1.0%

Run No.	07	08	10
Temperature, ° C	185	178	180
Pressure, psig	200	200	150
Filtrate, grams	17.5	20.0	20.0
Cake, grams	4.3	4.5	4.7
Initial[1] filtration rate, lb-ft ^{2}-hr ^{1}	4.72	4.91	2.40
Final[1] filtration rate .	2.30	1.54	1.19
Ash, initial[1] filtrate, pct	0.21	0.27	0.18
Ash, final[1] filtrate, pct	.08	.06	.08
Sulfur, initial[1] filtrate, pct	.50	.50	.43
Sulfur, final[1] filtrate, pct	.50	.45	.44

[1] "Initial" is first 10 grams, "final" is last ten grams or less if 10 grams is not available.

typical, established several facts. (1) For material as viscous as FB-36, temperatures greater than 165° C and pressures of 150 psig or more were necessary to attain a filtration rate through the paper that was experimentally practical in the sense of collecting analyzable quantities of 10 to 20 grams in less than thred hours. (2) The flow rate is quite sensitive to temperature, as shown by comparison between tests 07 and 08 wherein a 7° C increase causes a 49 pct increase in "final" flow rate. The comparison is made between "final" conditions because, as will be verified later, "initial" conditions are subject to many more rapidly changing and partially uncontrolled variables such as changing temperature and changing resistance. (3) Flow rate is dependent on pressure. A 25 pct pressure decrease between runs 08 and 10 produced a 23 pct "final flow" rate decrease despite a 2° C temperature increase. (4) Ash removal was at least 95 pct of the input ash, and removal improved to 98.6 pct as the cake built up. (5) The sulfur content on the other hand was rapidly reduced to 50 pct of the input sulfur, but was not further reduced with cake buildup.

The effects that have been described are indicative of some of the differences between coal liquefaction products and other materials that are usually subject to filtration. The inability to reduce the sulfur content below some apparently fixed level implies that part of the sulfur in Synthoil is present in a colloidal or soluble component. The temperature sensitivity of the flow rate is a reflection of viscosity changes in the fluid. A series of viscosity measurements were made using a rotational type of viscometer. For a Newtonian, or normal liquid, the shear stress vs rate-of-shear relation is a straight line passing through the origin, and the ratio of shear

stress to rate of shear, which is the viscosity, is a constant that changes only with temperature. The relation demonstrated in figure 2, in which the curves do not pass through the origin, shows that the FB-36 feed material was non-Newtonian and that the effective viscosity is a function of flow rate and diameter of the flow channels (pores in a filtration medium) as well as temperature. This leads to a non-linearity of filtration rate with pressure drop when all other parameters are constant. The degree of non-linearity increases with lower flow rates, a factor which must be considered in all data extrapolation. Another complication in filtering a coal liquefaction material is that two insoluble components are actually being removed--the inorganic matter, which is measured as ash, and the insoluble organic matter, or incompletely converted coal. The two components have different particle size distributions, different affinities for the filter medium and different requirements with respect to product quality specifications. Since the principle use of the Synthoil product is as a fuel, the incombustible (inorganic) content of the filtrate is the measure of product quality; however the total material removed as cake (organic plus inorganic) is the major factor controlling the separation process, as will be shown in the next section. Furthermore, the solubility of the organic matter in the feed may be expected to increase with temperature, so that the temperature may affect not only viscosity but also the amount of cake functioning as a filter medium in the filtration process, and consequently will affect both filtration rate and filtration quality.

Effect of Filtration Septum - Group II

In the second group of experiments, three different feed materials were filtered, each through two different filtering sheet materials or septa. One septum of each pair was the 41H Whatman filter paper used throughout the Group I experiments. The others were of different constructions and are described in table 3, which also lists the results of the tests. In the table the value for initial filtrate rate is given as measured and also (in parentheses) corrected to the value that would have been expected if the flow rate were proportional to pressure and if the initial pressure were 200 psi, which is the value for the final period of all runs but 38. This calculation is necessary to make the values of initial and final filtration rates more comparable. Experimentally the initial pressures had to be set much lower than the final values to keep the initial flow rates from being too high to measure conveniently.

In table 3 the most notable observation is that for the run pairs 08/09 and 40/41 the initial flow rates and filtrate clarity (pct ash) are highly disparate, whereas the final conditions are quite similar. For example, tests 08 and 09, which were with the same feed material, had initial corrected flow rates that differed by a factor of 168 whereas the final rates differed by less than 2. Initial ash contents of the filtrates differed by a factor of 19, and final values by 2. It may be hypothesized from this that initial flow rates and clarity were controlled by the properties of the septum that was used, but that the final filtering medium was the same regardless of the septum and was essentially the filter cake itself. The influence of the septum, therefore, was (a) to control the clarity of the initial filtrate (which could be recycled later, if this clarity was below specification), (b) to control the time required to build up a filter cake of sufficient thickness to become an effective filtering medium. In short batches, filtered without recycling, the septum will also affect the amount of cake that is removed and formed into the filtering medium, and affect therefore, both the average and final product clarity.

In table 3 the observations for pairs 38/39 are not as marked as those for the other two pairs, but this constitutes support for the filtering sequence suggested above. Measurements of several filter cakes showed that 10 grams of cake corresponded to a thickness of about 0.6 mm. Therefore, because of the low solids content in the feed, the total weight of cake deposited during runs 38 and 39 would be only a few micrometers thick, which based on later estimates of particle size, would correspond to only a few particle diameters and therefore provide a rather ineffective filtering medium even at the end of the run.

Use of "Precoat" as a Filter Medium - Groups III and IV

Industrial filtration is performed with many different devices, but considerations of particle size, concentrations and expected scale of operations in a coal liquefaction industry suggest use of a rotary drum filter, operated in a "precoat" mode. In this mode, a layer of a granular material, frequently a diatomaceous earth or a derivative thereof, is deposited on a perforated rotating cylinder which is partially immersed in the material to be filtered. A pressure differential between the outside and inside of the drum drives the liquid through the cylinder wall and the solids are deposited on or within the layer of precoat. As the drum rotates, the deposit is brought into contact with a knife blade. The blade advances at a rate which is set to remove the cake along with as much of the precoat material as may be obstructed by penetration of the cake.

The next phase of the filtration program was an exploration of the parameters of "precoat" filtration vis-à-vis rates and product clarity of other septa that have been illustrated in tables 2 and 3. In the Group III experiments, as shown in table 4, two different grades of a commercial calcined diatomaceous earth were deposited from an oil suspension on grade 41H filter paper. Comparison of the results for runs 07 and 08 in table 2 with those for runs 15 and 11 in table 4, which pertained to the same pressure, temperature and amount of cake, shows that the superposition of precoat on filter paper caused the initial flow to be increased considerably and the initial ash to be decreased; the final flow rate was decreased with approximately equal ash removal from the filtrate. The precoat retains some of the initial solids without building up a substantial cake, so that the filtrate is cleaner than the initial filtrate without the precoat, although the flow rate is higher. Ultimately a cake builds up, pressure drop increases and product clarity improves, but only to a level equivalent to that of the same cake formed without precoat. This observation provides further support for the hypothesis advanced in the previous section that the effective filter medium is not the original septum but the layer of cake that is filtered from the feed.

Table 4 also permits comparisons between (a) grades of precoat, (b) different amounts of the same grade, (c) different amounts of feed and therefore of cake, and (d) different temperatures. The table shows no significant correlation between any of these variables and the quality of the product, which is again confirmation of the hypothesis that the ash removal is primarily a function of the deposited cake, rather than of the substrate.

The fact that the amount of cake has no obvious effect on quality (compare, for example, pairs 11/12 and 15/27) implies that once the cake is formed, the solids separation is performed at the surface of the cake rather than within its depth. A consistent observation is that for each pair of runs that is identical except for amount of charge (11/12, 13/14, etc.), the final filtration rate is less for the greater charge. That is, the approximately doubled thickness of cake causes the flow rate to be cut approximately in half. This observation, in conjunction with the observation that the extra cake does not contribute to improved product

TABLE 3.- Effect of filter medium on Synthoil filtration

Run No	08	09	38	39	40	41
Pressure, psig	200	.1-200	.1-40	20-200	50-200	.2-200
Temp., ° C	178	179	21	21	85	90
Feed	FB-36	FB-36	FB-39cfg	FB-39cfg	FB-39unc	FB-39unc
Viscosity @ temp., cp	85	85	151	151	8.4	6.8
Filter medium	Wh41H	SFYC	Wh41H	Wh42	Wh41H	LC
Wt of filtrate, grams	20	22.4	132.4	142.3	93.3	67.2
Wt of cake, grams	4.5	4.0	0.11	0.16	15.0	12.2
Avg filtrate rate, $lb\text{-}ft^{-2}\ hr^{-1}$	2.30	0.86	89.8	4.80	3.08	2.71
Initial filtrate rate (corrected to 200 psi)	4.91(4.91)	4.13(826)	22.1(4420)	3.61(361)	6.60(26.4)	.87(868)
Final[2] filtrate rate	1.54	0.88	1116.2	2.91	3.19	2.28
Pct ash, feed	5.7	5.7	0.012	0.012	7.4	8.9
Pct ash, initial[2] filtrate ..	0.27	5.1	.009	.008	0.01	1.9
Pct ash, final[2] filtrate	.06	0.13	.010	.007	<.01	0.04

[1] Wh41H--Whatman filter paper, grade 41H (a rapid grade).
Wh42--Whatman filter paper, grade 42 (very retentive).
SFYC--Cloth, cotton non-woven (Eimco-Envirotech SFYC 1752116)
LC--A proprietary resin treated mat (Lainyl Clartex, Lainiere de Sclessin s.a., Belgium).

[2] "Initial" is first 10 grams, "final" is last 10 grams, or less if 10 grams is not available.

TABLE 4.- Use of supported "precoat" as a filter medium
Support: Wh-41-H filter paper

Run No.	11	12	13	14	16	17	15	27
Pressure, psig	200	200	200	200	200	200	200	200
Temperature, °C	170-179	164-171	160-179	180	182	183	182	185-178
Viscosity, centistokes	88.7-63.7	111-85.4	130-63.7	61.4	57.2	55.2	57.2	51.4-66.0
Precoat material[1]	C545	C545	C545	C545	C545	C545	Hyflo	Hyflo
Precoat weight, grams	1.2	1.2	1.2	1.2	3.6	3.6	1.5	1.5
Feed	FB-36	FB-36	FB-36	FB-36	FB-36	FB-36	FB-36	FB-36
Filtrate, grams	21.1	43.8	21.8	40.9	22.9	46.8	22.2	50.5
Cake, grams	4.7	9.5	4.7	8.8	6.4	9.4	5.4	10.0
Initial[2] filtrate rate, corrected to final press., $lb\text{-}ft^{-2}\text{-}hr^{-1}$	5.51	24.9	13.7	13.9	25.6	60.5	12.1	38.4
Final[2] filtrate rate	1.83	0.91	2.80	1.07	9.02	2.19	1.82	1.02
Pct ash, initial[2] filtrate.	0.23	0.38	0.43	0.83	0.57	0.07	0.12	0.11
Pct ash, final[2] filtrate ..	.03	.07	.08	.22	.05	.01	.08	.04

[1] Precoat: C545 - Johns-Manville Celite 545, Nominal relative flow rate: 2,160
Hyflo - " " Hyflo Super-Cel, Nominal relative flow rate: 500

[2] See footnote, table 2.

clarity, leads to the conclusion that a continuous system should be operated with the minimum cake thickness required to give good clarity. Since, however, a finite cake layer is required for acceptable clarity, the cake-on-precoat layer should not be cut so deep as to remove the entire cake layer, thus preserving all the precoat.

"Initial" flow rates are less meaningful because they are not instantaneous values but are values integrated over one-half to one-third the total filtration time during that interval when pressures, temperatures (and therefore viscosities), and cake formation are all changing. In all cases the "initial" flow rate for the larger amount of feed was greater than for the smaller amount; this is probably not of fundamental significance but is a reflection of the longer interval to reach equilibrium and perhaps indicates that the larger volumes may initially disturb the upper layer of the precoat material.

The effect of the larger amount of precoat (compare runs 16 with 13 or 17 with 14) is to cause a larger "initial" flow rate, which supports the hypothesis offered in an earlier paragraph that the porosity of the precoat delays the formation of a filtering cake. However, Hyflo (the less porous precoat as rated by the manufacturer) used in run 27 increased the flow rate over that measured in run 14, in which Celite 545, nominally a more porous precoat, was used. The difference in this case may be due to the fact that Hyflo and Celite 545 are somewhat different chemically, so that the flow resistance to water, as used in the manufacturer's criterion, may not follow the same patterns as resistance to Synthoil, if hydration, streaming potentials or other physicochemical forces are operative.

The last series of filtrations was made with the precoat material supported only on a 100-mesh stainless steel screen, i.e., unbacked by filter paper. Initial tests gave erratic results that could be explained by the sensitivity of the precoat layer to small disturbances in flows and pressures. Even the minor fluctuations in pressure caused by normal operation of a pressure regulator caused occasional rapid flow which disturbed the precoat layer and caused the feed to bypass the precoat, as disclosed by disassembling the filter unit and observing layers of Synthoil between the precoat and the wall of the filter tube. Successful filtrations were obtained by installing a needle valve between the pressure regulator and the filter to damp out sudden fluctuations and by maintaining close control on temperature changes. The data in table 5 were taken for five runs permitting comparison between two precoat materials and two different feed materials.

Because, for the unsupported precoat runs it was deemed necessary to increase temperatures and pressures very gradually, the conditions for the "initial" interval varied widely from run to run and these values are less comparable than are the "final" data. In all cases of good filtration, a line of sharp demarkation was found between the cake and precoat which implies that little penetration takes place into the precoat and that on a continuous filter, the cake could be removed without excessive loss of precoat.

The data in table 5 confirm the previously stated hypothesis that once a stable filter cake layer is formed, Synthoil filtration is independent of the substrate on which the layer is deposited. All the "final ash" analyses represent removal of 98.8 to 99.3 pct of the ash in the feed. The apparently wide variation in the absolute value of the ash analysis (.08 pct to .035 pct) reflects a sensitivity of the process to bypassing: if the filter actually reduces the ash content from 5.7 pct to .035 pct, and only 1.0 pct of the feed bypasses the filter action, the product will contain (.00035 x 99) + (.057 x 1) = .092 pct ash, an increase of 2.5 times the true filtrate analysis.

TABLE 5.- Use of unsupported "precoat" as a filter medium

Run No.	29	32	33	34	37
Pressure, psig	100-150	28-200	30-100	30-100	15-50
Temperature, °C	152-166	155-179	170-179	190-200	96
Viscosity, centistokes ...	179-103	159-63.7	88.7-63.7	43.2-30.9	63
Precoat, material[1]	Hyflo	C545	C545	C545	C545
Precoat weight, grams	6.0	6.0	6.0	6.0	6.0
Feed	FB-36	FB-36	FB-36	FB-36	[4]FB-38
Filtrate, grams	19.2	40.3	42.8	45.4	60.2
Cake, grams[3]	9.4	(7.4)	9.2	(10.0)	9.2
Initial[2] filtrate rate, corrected to 200 psig, lb-ft^{-2}-hr^{-1}	4.72	11.0	28.3	47.7	72.1
Final[2] filtrate rate, corrected to 200 psig, lb-ft^{-2}-hr^{-1}	2.87	1.35	1.84	2.65	114.0
Ash, initial, pct	0.16	0.73	0.10	0.12	0.03
Ash, final, pct	.04	.056	.067	.035	.08
Sulfur, initial, pct	.51	.70	.52	.41	.24
Sulfur, final, pct	.51	.53	.50	.47	.26

[1] See footnote 1, table 4.
[2] See footnote 2, table 2.
[3] Cake weight in parentheses denotes indirect determination from measurement of cake thickness.
[4] Ash = 8.6 pct, Sulfur = .37 pct.

The qualitative effect of temperature is apparent in table 5. Runs 32, 33, and 34 differ only in temperature, and the observed filtration rates for the three experiments increase as the viscosities decrease. Additional data is available for an analysis of the pressure drop flow relation, but since no direct measurements of the cake deposited are available except at the end of the run, and since flow rates were not measured but only total weights at various times, a number of assumptions must be made and only a simplified correlation can be attempted. We may assume that:

(a) the flow rate, $dW/d\theta$ is proportional to the driving force ΔP, inversely proportional to the fluid properties incorporated in the measured viscosity, μ, and inversely proportional to a cake property we define as a resistance R. This assumption may be restated as

$$dW/d\theta = k_1 \Delta P/(\mu R) \qquad 1)$$

which may be used as a defining equation for R by setting $k_1 = 1$, from which

$$R = \Delta P/(\mu \; dW/d\theta). \qquad 2)$$

As it is reasonable to assume that:

(b) the resistance to flow will be inversely proportional to the cross-sectional area transverse to the direction of flow, Equation 2 can be somewhat generalized by stating the flow rate as flow per square foot or:

$$R = \Delta P/[\mu (dW/d\theta/A)] \qquad 3)$$

The test procedures that were followed provide no mechanism for determining the amount of cake present at any instant during the filtration; we therefore make a third assumption:

(c) the amount of cake is proportional to the amount of slurry that has been filtered.

Figure 3 is a graph of the resistance to flow through the filter cake and precoat of runs 32, 33 and 34, plotted as a function of the total weight of slurry filtered. Although the legend in the figure indicates an average temperature for each run, the resistance values were calculated for the measured temperature at the specific time. Figure 4 is a similar plot for earlier runs in which filter paper and not precoat was used. It is apparent that the resistance, as defined in terms of pressure drop and flow and as corrected for temperature effects by division by the viscosity, correlates well with the total weight of filtrate. If the abscissa were weight of cake, and all other cake properties were invariant, the curves of figures 3 and 4 would be straight lines, with the v-intercept equal to the resistance of the initial septum, i.e. the precoat or filter paper. The observed curvature could be due to any one or more of a number of factors which have been discussed earlier.

(a) The weight of cake is <u>not</u> proportional to the weight of filtrate. This is, in fact, known to be the case, as the analytical results showed that more solids were removed from the last part of the filtrate than from the "initial" filtrate. However, changes in the weight of ash removed from the "final" filtrate are small so that the last half of the data should approximate a straight line.

(b) Size distribution of the particles removed may change, so that more fines are removed that tend to plug or "blind" the passages in the latter part of the cake than in the former.

(c) The cake may be compressible, so that its permeability is decreased as the pressure drop across it increases.

(d) The non-Newtonian viscous behavior of the fluid, as demonstrated in figure 2, may be of sufficient magnitude that the changed shear rate in the latter part of the filtration may create a much greater effective viscosity than is used in the resistance calculation.

Each of the above possibilities presents a major challenge, the evaluation of which may lead to greatly improved filtration. However, even without resolving the reasons for the curvature of figures 3 and 4, important deductions can be made.

(a) Resistance increases more than proportionally with the amount of cake. For a continuous system where the cake thickness can be controlled, the thickness should be held at the minimum value that will yield acceptable filtrate clarity.

(b) Resistance per unit of cake increases much more rapidly when the initial septum is filter paper rather than precoat.

Varied Feeds - Group V

Although most of the tests discussed were made with the feed material designated as FB-36, several other materials were used. The results for these materials were entirely consistent with the results for FB-36 and they have been included in tables 3 and 5 (runs 37, 38, 39, 40, 41) wherein the only significant effect due to the feed is that feeds with lower ash content yielded products with less ash, although, for reasons discussed earlier in connection with table 3, the changes were not proportionate.

ADDITIONAL WORK

In parallel efforts, filtration studies have been carried on with larger scale equipment. In tests with a rotary drum filter, details of which will be published at a later date, we have utilized the principles advanced here of maintaining a thin, uniform cake of solids on top of a precoat layer. A recent run of 444 uninterrupted hours on stream, included a steady state period of 200 hours, during which an ash removal of at least 99.1 pct was maintained, with an average filtrate content of .09 pct ash.

CONCLUSIONS

Batch filtration is a technically feasible method of removing ash from a Synthoil product so that the only remaining problem is the mechanics of scaled-up continuous filters. Starting with a material containing 5.7 pct ash, analyses of less than 0.1 pct have been almost routinely attained using a commercial precoat material with no filter paper support. The nominal filter medium has little influence on the ultimate product clarity, as the true filter medium is the cake that is formed from the feed. The nominal filter medium affects the pressure drop, the time required to build up a functioning cake, and the number of precautions that are required to forestall possible system disturbances such as pressure variations during cake buildup. Filtration rates are very sensitive to temperature, but when cake resistances are divided by the measured viscosity, the temperature effect is properly accounted for.

In the batch filter tests reported here, two observations suggest that a continuous filter will be effective:

(1) a clear demarkation usually exists between cake and precoat so that separation in a continuous unit should be simple with minimum cost in precoat;

(2) adequate clarity is attained with a relatively thin cake layer whereas additional cake adds to the pressure requirement without major improvement in clarity.

Filtration of Synthoil causes a certain amount of reduction in sulfur, but beyond this point, improved filtration, as measured by ash reduction, does not improve sulfur reduction. Quantitative analysis and possible improvement of the filtration process requires further study into particle size distribution, cake compressibility, and the effect of the observed non-Newtonian flow characteristics of the fluid being treated.

NOMENCLATURE

W = weight of filtrate
θ = elapsed time
ΔP = pressure difference across filter
μ = viscosity
R = resistance to filtrate flow
k_1 = constant
A = area of filter normal to flow

REFERENCES

1. General Electric Co. Gas Turbine Liquid Fuel Specifications GEI-41047E, March 1973, page 5 (1973).

2. Walker, P. L. Electric Power Research Institute, Report No. EPRI-366-1, Dec. 1975.

3. Yavorsky, P. M., S. Akhtar, S. Friedman. Chem. Eng. Prog., 69, No. 3, pp. 51-52 (1973).

4. Yavorsky, P. M., S. Akhtar, S. Friedman. AIChE Symposium Series No. 137, 70, pp. 101-105 (1974).

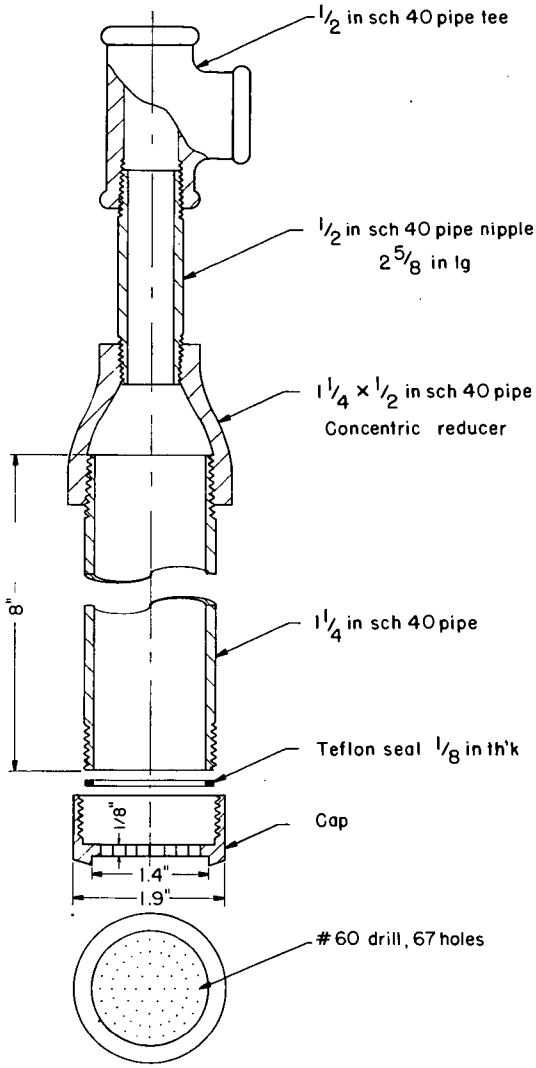

Figure 1–Small filter for use at elevated temperatures and pressures.

L-14800

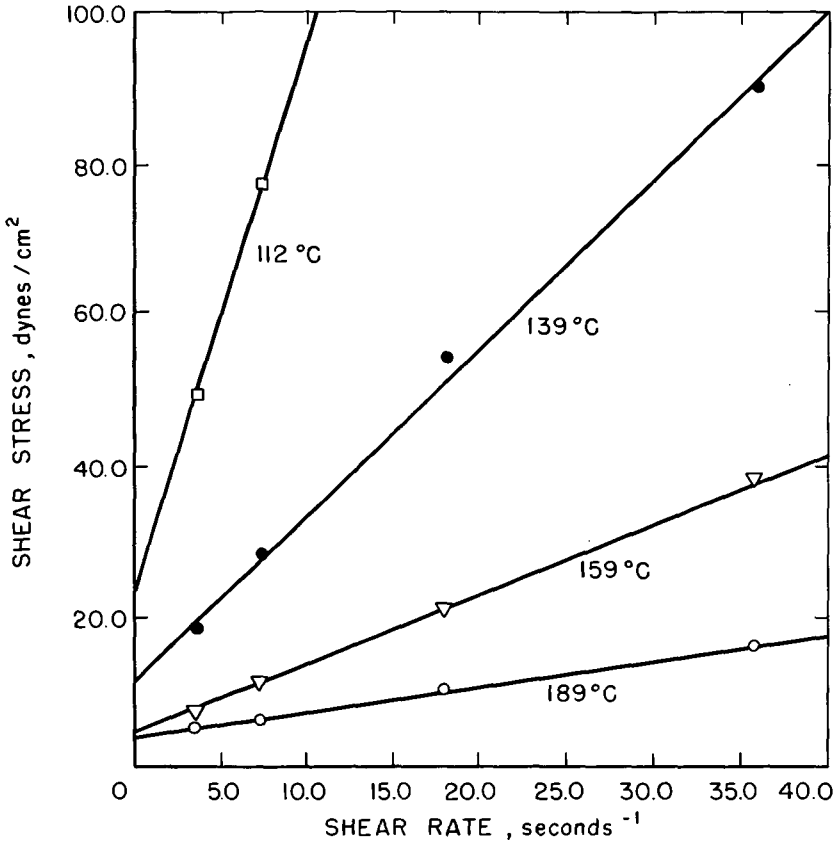

Figure 2 - Viscous behavior of FB-36.

4-15-76 14801

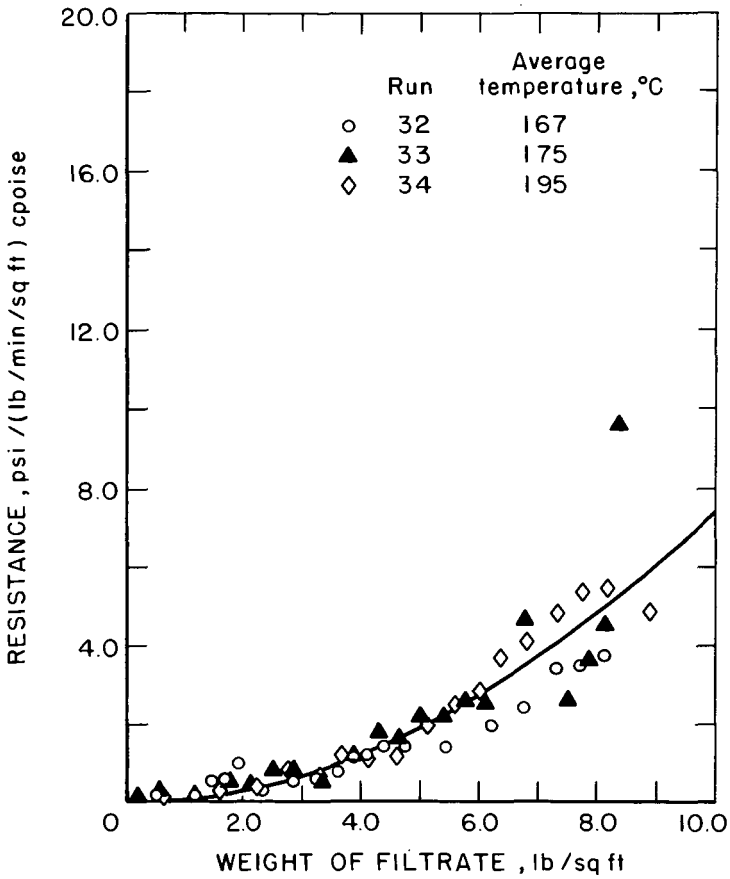

Figure 3 - Filtration resistance through filter cake and 6 grams of C-545 precoat.

4-15-76 L-14802

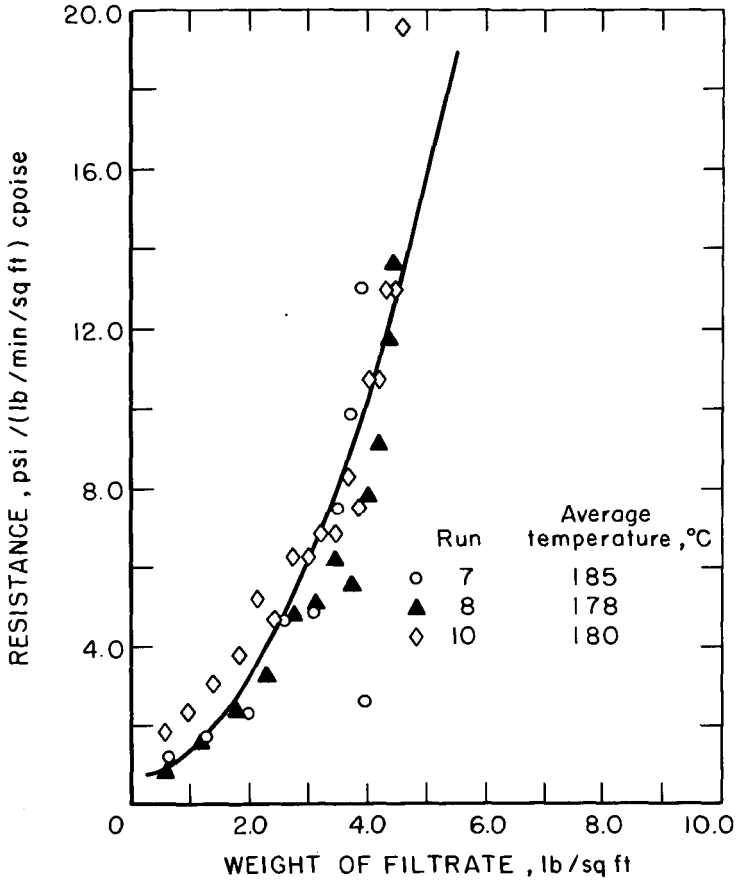

Figure 4 - Filtration resistance through filter cake and filter paper.

4-15-76 L-14803