ECONOMICS OF PRODUCING METHANOL FROM COAL BY ENTRAINED AND FLUIDIZED-BED GASIFIERS

William C. Morel and Yong Jai Yim

U.S. Department of the Interior, Bureau of Mines
Process Evaluation Office--MMRD
P.O. Box 880
Morgantown, West Virginia 26505

Methanol is one of several liquid fuels being considered as a supplement to help alleviate increasing gasoline requirements, the anticipated curtailment of the availability of domestic crude oil and natural gas, and the steadily increasing cost of foreign crude. Methanol has one-half the heating value of gasoline and a lower air requirement for combustion, so some modifications will be required in the carburetor design. Present-day carburetors can operate with a gasoline fuel containing about 10 percent methanol. Coal is being considered as an alternative raw material for the production of methanol owing to the apparent depletion of natural gas supplies.

An economic evaluation of methanol production from coal synthesis gas based on a 5,000-ton-per-day capacity is presented. Two coal gasification systems are considered--entrained and Synthane (a fluid-bed process). Figure 1 is a block diagram showing major units in these two processes. The estimates are based on January 1976 cost indexes. Average selling prices of the gas were determined by using DCF rates of 12, 15, and 20 percent at various coal costs. No inflation factors are included during the life of the plant. Pollution abatement considerations have been incorporated. Some of the economic and technical details are included for the two systems.

ENTRAINED GASIFICATION

In this system methanol is produced from synthesis gas prepared by entrained gasification of Pittsburgh seam coal at 30 atmospheres. (1) Figure 2 is a flow diagram of the process and includes the following steps:

1. Coal preparation, which includes crushing, screening, sizing, and drying of the run-of-mine coal (not shown on figure 2).
2. Entrained oxygen-coal gasification at 30 atmospheres with a 2,400° F outlet gas temperature. Gasifier volume was based on a 2.5-second gas residence time.
3. A dust removal unit removes the entrained dust from the synthesis gas with cyclone separators before it enters the waste heat recovery unit where steam required in the gasification and shift conversion units is produced. The cooled gas then flows through an electrostatic precipitator for residual dust removal.
4. Shift conversion of the clean synthesis gas to a H_2:CO ratio of 2.3:1 in the presence of sulfur-resistant catalyst. The 50-psig saturated steam required in the purification unit is produced in the heat recovery system following the shift converters.
5. The hot-carbonate purification unit, which reduces the CO_2 content to 2.8 percent and removes essentially all of the H_2S and COS. (2) Char towers are provided for removal of residual sulfur compounds.
6. The low-pressure methanol synthesis system, operating at 570° F and 1,470 psia and utilizing a copper-based catalyst.

It is assumed that approximately 15 percent of the total H_2 and CO entering the converter is synthesized to methanol. The design of the converters was based on a gas space velocity of 10,000 v/v/h. (3) The thermal efficiency of the plant is 46.5 percent, based on a gross heating value of coal at 13,400 Btu per pound and methanol at 10,259 Btu per pound.

SYNTHANE GASIFICATION

The synthesis gas is produced by fluidized gasification of Pittsburgh seam coal at 68 atmospheres. (4) Figure 3 is a flow diagram of the process and includes the following steps:

1. Coal preparation, which includes crushing, screening, sizing, and drying of the run-of-mine coal (not shown on figure 3).
2. Coal pretreatment in the top section of gasification unit to destroy caking properties.
3. Free-fall carbonization plus steam-oxygen gasification of the pretreated coal in a fluidized bed.
4. Entrained char removal in cyclone separators and tar removal by water scrubbing.
5. The first hot-carbonate purification unit, which reduces the CO_2 content to 1 percent and removes essentially all the H_2S and COS. Char towers are provided for removal of residual sulfur compounds.
6. A steam-methane reformer unit, which converts about 95 percent of the CH_4 to CO and H_2 to decrease the amount of purge gas from the methanol synthesis unit in addition to producing H_2 for synthesis.
7. A reverse shift conversion unit, which reduces the H_2:CO ratio of the reformer gas product from 4.3:1 to 2.3:1. CO_2 requirement for the reaction is supplied by off gas from the purification system.
8. A second hot carbonate purification unit which selectively reduces the CO_2 content to 2.8 percent. Off gas from the regenerator, namely CO_2 saturated with water vapor, is cooled and compressed to meet CO_2 requirements of the reverse shift converters.
9. The methanol synthesis unit which operates at the same conditions as the other case.

The gasifiers are designed to operate at a pressure of 1,000 psia and at a maximum temperature of 1,800° F with coal throughput of 580 pounds per hour per square foot of cross-sectional area. The assumptions for the methanol synthesis are the same as those used in the entrained gasification system. The thermal efficiency of the plant is 41.6 percent, based on a gross heating value of 13,400 Btu per pound of coal and gross heating values of methanol and byproduct tar of 10,259 Btu per pound and 130,000 Btu per gallon, respectively.

CAPITAL INVESTMENT

The total investment is estimated to be $331.7 million for the entrained gasification system, or $252.7 million lower than for the Synthane gasification system.

Table 1 is a capital requirement comparison of the two systems, and figure 4 shows the distribution of capital requirement for major processes. Detailed cost summaries of the major processing units are not included, but the costs of the individual units are listed. General facilities include administrative buildings, shops, warehouses, railroad spurs, rolling stock, roads, waste water treatment, and fences. The cost of steam and power distribution, cooling water towers, plant and instrument air, fire protection, and sanitary water are included in plant utilities.

OPERATING COST

Table 2 presents the estimated operating cost comparison for the entrained and Synthane gasification systems. An assumed 90-percent operating factor allows 35 days for downtime, two 10-day shutdowns for equipment inspection and maintenance, and 15 days for unscheduled operational interruptions. With labor at $6 per hour, payroll overhead at 30 percent of payroll, and depreciation at 5 percent of the subtotal for depreciation allowing credit for sulfur recovered at $25 per ton, and with the cost of coal as a variable, the following operating costs are derived:

Cost of coal per ton	Per year, MM		Per gallon		Per MMBtu	
	Entrained	Synthane	Entrained	Synthane	Entrained	Synthane
$11	$77.7	$116.6	$0.15	$0.23	$2.25	$3.44
13	82.8	122.7	.16	.35	2.38	3.63
15	87.8	128.9	.17	.26	2.50	3.81

Based on a 330-day operation year for the plant and allowing credit for the sulfur produced, with coal costs and discounted cash flow rates as parameters, the average selling prices of the methanol product per gallon and per MMBtu for the two systems are shown in the following table: (These are also plotted on figure 5.)

Cost of coal per ton	Methanol selling price					
	12-pct DCF		15-pct DCF		20-pct DCF	
	Entrained	Synthane	Entrained	Synthane	Entrained	Synthane
	Dollars per gallon					
$11	0.26	0.43	0.30	0.49	0.37	0.62
13	.27	.44	.31	.51	.38	.63
15	.28	.45	.32	.52	.39	.64
	Dollars per MMBtu					
11	3.84	6.35	4.43	7.23	5.46	9.15
13	3.98	6.49	4.57	7.46	5.61	9.30
15	4.13	6.64	4.72	7.67	5.76	9.44

The DCF computer program takes into account the capital expenditure prior to startup so that the interest during construction is deleted from the capital requirement. Provisions are made for recovery of the working capital in the 20th year.

UNIT COST SUMMARY

The selling price used to determine the high-cost elements in the process was based on a 15-percent DCF for a 20-year project life, with coal at $13 per ton. A breakdown of the cost elements for the two systems is shown in table 3. Figure 6 shows the selling price of major processes for the two systems.

SUMMARY OF COMPARISONS

As shown in table 1, the total investment for the entrained gasification system is $252.7 million, or 43 percent lower than for the Synthane system. About 60 percent of the difference is in synthesis gas preparation, consisting of the fluidized gasification system and the methane reforming unit for converting the methane in the product to synthesis gas. It is apparent that the reason for this high capital investment for the Synthane gasification unit is its higher operating pressure; also it requires more separation of such impurities as ammonia, char, and tar from the gas stream. The major part of this capital cost difference comes from the steam-methane reforming unit to process approximately 35 percent (dry base) of methane in the gas stream. This high-temperature reforming reaction is endothermic and requires not only high capital cost but also high-temperature steam to supply the heat required for the reaction. In addition to these, the Synthane system requires extra processes over the entrained gasification system such as a second purification step and CO_2 compression. The higher capital cost of the methanol synthesis unit for the Synthane system, even though both systems have similar feed gas composition and flow rates, is due to the higher compression ratio of the feed gas, resulting in a higher compression cost. Differences in capital costs for these two systems are shown in figure 4.

The operating cost for the entrained gasification system is about 33 percent less than for the Synthane system as shown in table 2. Increases in maintenance, overhead, and indirect and fixed costs, which are directly related to the capital investment, represent the main difference.

The average selling price was based on three coal costs ($11, $13, and $15) and three DCF rates of return (12, 15, and 20 percent). Over this range, the selling price for the entrained gasification is 17 to 25 cents per gallon of product lower than for the Synthane gasification, or $2.51 to $3.68 per MMBtu. This represents about a 40-percent decrease.

CONCLUSION

Results of this study clearly indicate the entrained gasification system is more economical than the Synthane fluidized system to produce methanol from coal. The commercial available Lurgi fixed-bed gasification unit will yield similar results owing to the formation of methane in the product as in the fluidized system. One of two alternatives would be a combination of a high-Btu gas plant with methanol as its byproduct. This would eliminate the high cost of a methane-steam reforming unit, but it would have a lower methanol conversion yield because the partial pressure of the hydrogen and carbon monoxide is reduced by the higher methane content in the gas stream plus the fact that the methanol is synthesized on a "once through" basis without recirculation. The other alternative would be the separation of methane from the gas stream by a cryogenic method, but this is also considered a high-capital process. Even though the Synthane coal gasification system may not be the most suitable process to produce methanol from coal owing to its high methane content, it is comparable to other gasification systems that produce high-Btu gas.

REFERENCE

1) Intra-Bureau Report No. 77-12, "Methanol via Entrained Gasification of Pittsburgh Seam Coal, 5,000-Ton-Per-Day Plant." Process Evaluation Office, U.S. Bureau of Mines, Morgantown, W. Va.

2) Wellman, P., and S. Katell. U.S. Bureau of Mines Information Circular 8366, "Hot Carbonate Purification Computer Program," March 1968.

3) Danner, G. A. Methanol Technology and Economics. Chem. Eng. Prog. Symposium Series, No. 98, v. 66, 1970.

4) Intra-Bureau Report No. 76-17, "Methanol via Synthane Gasification of Pittsburgh Seam Coal, 5,000-Ton-Per-Day Plant." Process Evaluation Office, U.S. Bureau of Mines, Morgantown, W. Va., September 1976.

TABLE 1. - Capital requirements: Comparison of entrained gasification system with Synthane gasification system

Unit	Entrained gasification	Synthane gasification	Difference
Coal preparation.....	$9,506,900	$11,327,500	$-1,820,600
Gasification.....	8,161,200	45,833,000	-37,671,800
Dust removal.....	2,278,900	9,117,000	-6,838,100
Purification No. 1.....	24,731,200	39,728,400	-14,997,200
Methane reforming.....	-	32,462,900	-32,462,900
Waste heat recovery No. 1.	2,169,100	3,599,000	-1,429,900
CO_2 compression.....	-	23,304,500	-23,304,500
Shift conversion.....	1,629,200		+1,629,200
Reverse shift conversion..	-	4,513,900	-4,513,900
Waste heat recovery No. 2.	7,852,200	10,488,100	-2,635,900
Purification No. 2.....	-	29,244,300	-29,244,300
Methanol synthesis.....	63,096,600	86,159,500	-23,062,900
Oxygen plant.....	47,200,000	22,000,000	+25,200,000
Sulfur recovery plant.....	1,100,000	1,130,000	-30,000
Waste water treatment.....	-	10,355,400	-10,355,400
Flue gas processing.....	9,491,400	12,723,700	-3,232,300
Steam and power plant.....	42,452,900	45,595,000	-3,142,100
Plant facilities.....	16,475,200	29,068,100	-12,592,900
Plant utilities.....	23,614,500	41,665,000	-18,050,500
Total construction...	259,759,300	458,315,300	-198,556,000
Initial catalyst requirements.....	2,504,700	3,672,100	-1,167,400
Total plant cost (insurance and tax bases).....	262,264,000	461,987,400	-199,723,400
Interest during construction.....	39,339,600	69,298,100	-29,958,500
Subtotal for depreciation.....	301,603,600	531,285,500	-229,681,900
Working capital.....	30,160,400	53,128,600	-22,968,200
Total investment.....	331,764,000	584,414,100	-252,650,100

TABLE 2. - Annual operating cost: Comparison of entrained gasification with Synthane gasification

Cost item	Entrained gasification	Synthane gasification	Difference
Direct cost:			
Raw materials:			
Coal at $11 per ton...	$27,965,500	$33,776,400	$-5,810,900
Raw water.....	691,400	1,375,700	-684,300
Catalyst and chemicals	1,300,200	3,109,700	-1,809,500
Methane.....	143,200	233,400	-90,200
Subtotal.....	30,100,300	38,495,200	-8,394,900
Direct labor.....	2,312,600	2,733,100	-420,500
Direct labor supervision	346,900	410,000	-63,100
Subtotal.....	2,659,500	3,143,100	-483,600
Maintenance labor.....	4,845,000	8,550,000	-3,705,000
Maintenance labor supervision.....	969,000	1,710,000	-741,000
Maintenance material and contracts.....	7,267,500	12,825,000	-5,557,500
Subtotal.....	13,081,500	23,085,000	-10,003,500
Payroll overhead.....	2,542,100	4,020,900	-1,478,800
Operating supplies.....	2,616,300	4,617,000	-2,000,700
Total direct cost..	50,999,700	73,361,200	-22,361,500
Indirect cost.....	7,342,900	12,338,000	-4,995,100
Fixed cost:			
Taxes and insurance.....	5,245,300	9,239,800	-3,994,500
Depreciation.....	15,080,200	26,564,300	-11,484,100
Total, before credit.....	78,668,100	121,503,300	-42,835,200
Sulfur credit.....	994,100	995,900	+1,800
Tar credit.....	-	2,184,200	+2,184,200
Ammonia credit.....	-	1,744,400	+1,744,400
Operating cost, after credit....	77,674,000	116,578,800	-38,904,800

TABLE 3. - Unit cost comparison

Process unit	Cost per gallon of product	
	Entrained gasification	Synthane gasification
Coal preparation.....	$0.014	$0.016
Gasification.....	.156	.170
Dust removal.....	.003	.015
Purification No. 1.....	.036	.052
Methane reforming.....	-	.035
CO_2 compression.....	-	.033
Reverse shift conversion.	-	.005
Shift conversion.....	.023	-
Purification No. 2.....	-	.052
Methanol synthesis.....	.070	.103
Sulfur recovery.....	.001	-
Waste water treatment....	-	.009
Flue gas processing.....	.011	.015
Total.....	.314	.505

NOTE:--Coal at $13 per ton; DCF at 15 pct.

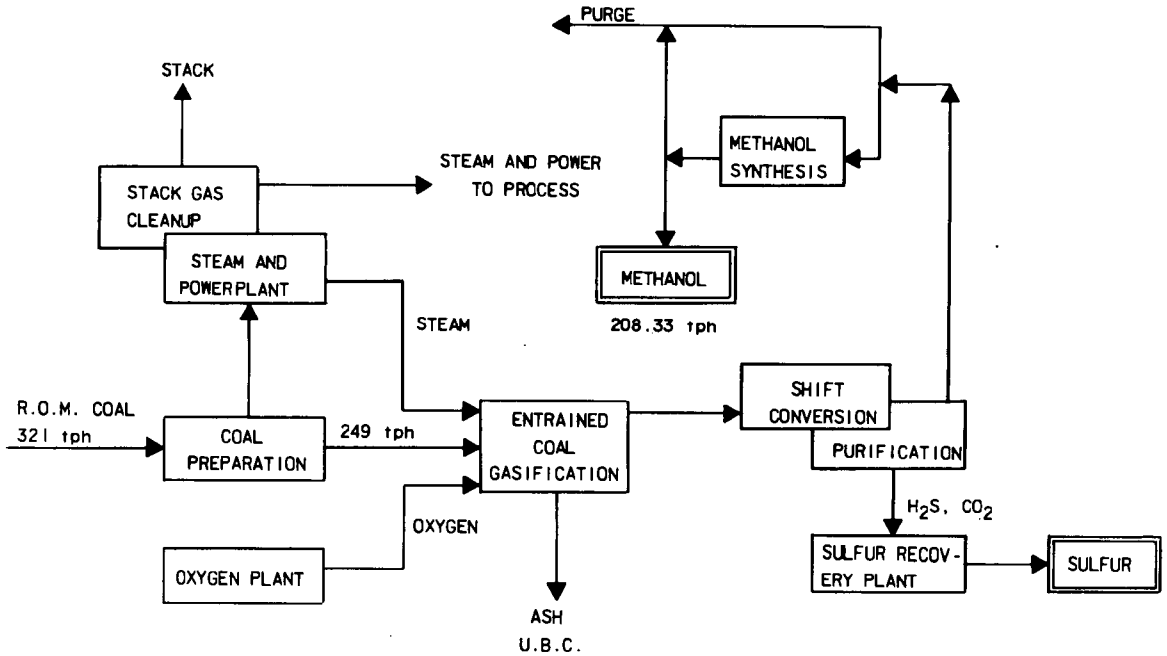

FIGURE 1A. - SCHEMATIC LAYOUT OF ENTRAINED COAL GASIFICATION TO SYNTHESIZE METHANOL

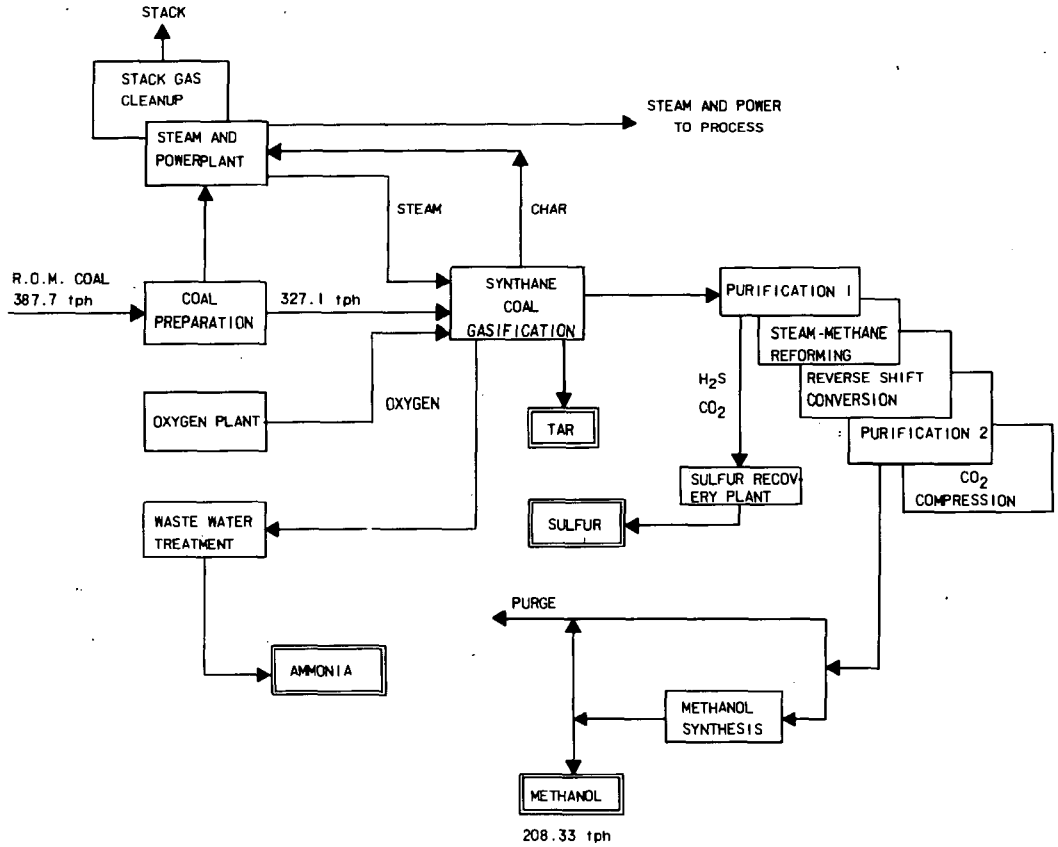

FIGURE 1B - SCHEMATIC LAYOUT OF SYNTHANE COAL GASIFICATION TO SYNTHESIZE METHANOL

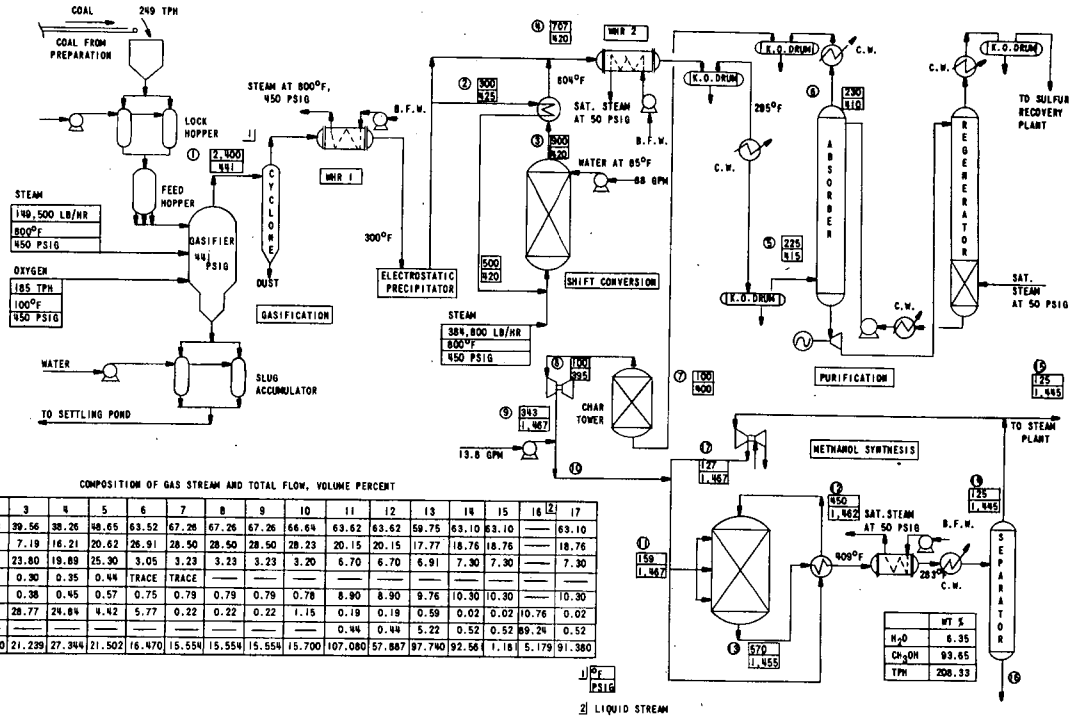

COMPOSITION OF GAS STREAM AND TOTAL FLOW, VOLUME PERCENT

	1	2	3	4	5	6	7	8	9	10	11	12	13	14	15	16 [2]	17
H_2	33.73	33.73	39.56	38.26	48.65	63.52	67.26	67.26	67.26	66.64	63.62	63.62	59.75	63.10	63.10	—	63.10
CO	47.59	47.59	7.19	16.21	20.62	26.91	28.50	28.50	28.50	28.23	20.15	20.15	17.77	18.76	18.76	—	18.76
CO_2	6.31	6.31	23.80	19.89	25.30	3.05	3.23	3.23	3.23	3.20	6.70	6.70	6.91	7.30	7.30	—	7.30
H_2S	0.52	0.52	0.30	0.35	0.44	TRACE	TRACE	—	—	—	—	—	—	—	—	—	—
N_2	0.67	0.67	0.38	0.45	0.57	0.75	0.79	0.79	0.79	0.78	8.90	8.90	9.76	10.30	10.30	—	10.30
H_2O	11.18	11.18	28.77	24.84	4.42	5.77	0.22	0.22	0.22	1.15	0.19	0.19	0.59	0.02	0.02	10.76	0.02
CH_3OH	—	—	—	—	—	—	—	—	—	—	0.44	0.44	5.22	0.52	0.52	89.24	0.52
MMSCFH	18.315	12.210	21.239	27.344	21.502	16.470	15.554	15.554	15.554	15.700	107.080	57.887	97.740	92.56	1.181	5.179	91.380

1 °F / PSIG

2 LIQUID STREAM

	WT %
H_2O	6.35
CH_3OH	93.65
TPH	208.33

FIG. 2. METHANOL SYNTHESIS VIA ENTRAINED COAL GASIFICATION (5000 TPD)

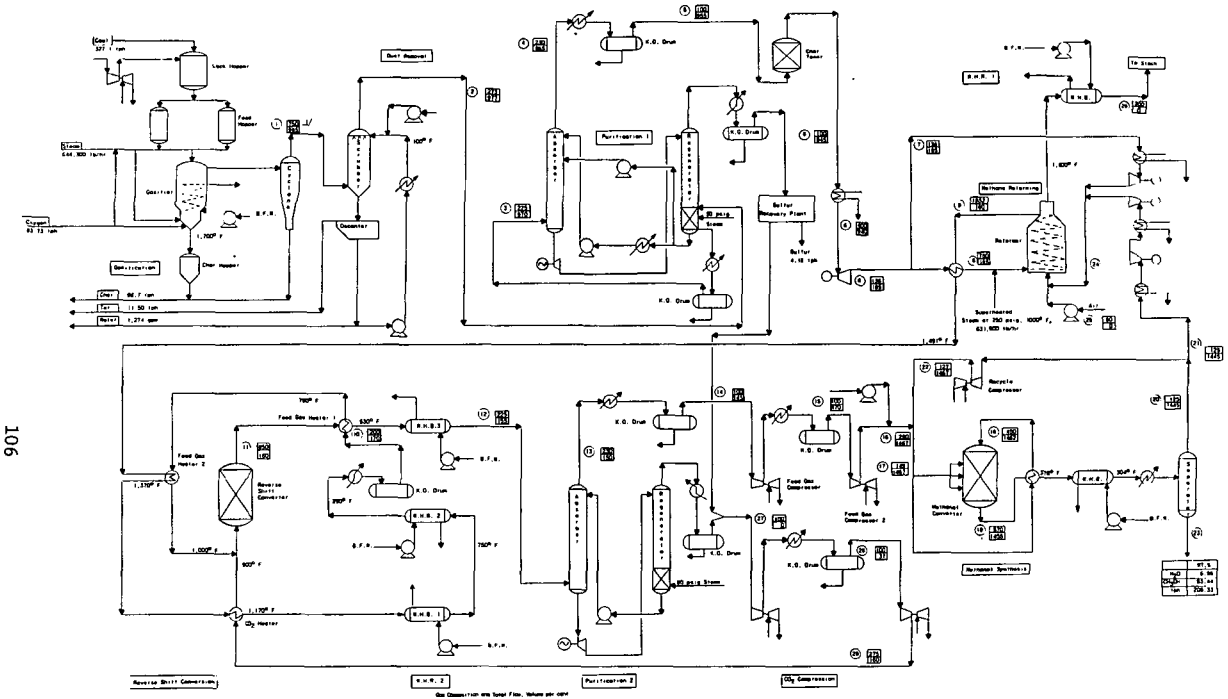

Gas Composition mole Sample Flow, Volume per cent

	1	2	3	4	5	6	7	8	9	10	11	12	13	14	15	16	17	18	19	20	21	22 1/	24
H_2	17.34	26.83	27.04	37.98	38.88	38.98	38.98	38.88	47.40	17.83	40.34	40.34	37.08	98.64	68.90	66.26	63.96	62.96	62.96	63.08	63.08	63.08	-	45.52
CO	12.53	19.00	16.43	22.31	23.48	23.48	23.48	23.48	11.09	15.61	17.08	17.08	34.16	29.24	28.20	26.09	20.12	20.12	17.80	18.76	18.76	18.76	-	21.61
CO_2	49.31	37.67	39.40	1.00	1.63	1.63	1.63	1.02	6.21	8.99	31.90	31.90	2.79	3.22	3.28	3.80	4.11	4.11	1.83	1.30	1.30	1.30	-	3.26
CH_4	15.98	23.34	23.95	33.38	34.24	34.24	34.24	34.24	0.46	0.56	0.45	0.45	0.64	0.76	0.76	0.74	0.10	0.10	1.36	0.86	0.86	0.86	-	23.13
C_2H_6	.48	.72	.75	1.05	1.07	1.07	1.07	1.07	-	-	-	-	-	-	-	-	-	-	-	-	-	-	-	8.40
H_2S	.44	.66	Trace	Trace	Trace	Trace	-	-	-	-	-	-	-	-	-	-	-	-	-	-	-	-	-	-
N_2	.62	.62	.64	1.17	1.20	1.20	1.20	1.20	0.55	0.58	0.34	0.34	0.16	0.96	0.57	0.56	3.98	3.98	4.24	4.48	4.48	4.48	-	2.43
H_2O	3.10	4.42	1.62	2.47	0.10	0.10	0.10	0.10	34.48	6.23	10.48	10.48	14.83	0.69	0.20	1.15	0.16	0.19	0.59	0.02	0.02	0.02	11.10	0.06
CH_3OH	-	-	-	-	-	-	-	-	-	-	-	-	-	-	-	-	0.66	0.64	5.00	0.52	0.52	0.52	88.90	0.22
MOLEFW	22.187	16.817	14.481	10.404	10.138	10.138	7.458	7.680	26.330	18.395	24.816	24.818	16.846	16.332	16.168	16.324	111.449	90.863	107.243	87.094	1.926	95.138	5.187	4.384

	25	26	27	28	29
CO	-	9.84	95.25	88.11	96.17
H_2	-	18.40	4.75	1.82	1.83
N_2	21.00	1.66	-	-	-
O_2	79.00	68.10	-	-	-
MOLEFW	28.966	31.553	8.844	8.561	8.581

1/ $\frac{lb}{hr}$ (MHB)

2/ Liquid Stream

FIGURE 3 - Methanol Synthesis via Synthane Coal Gasification (10,000 tpd)

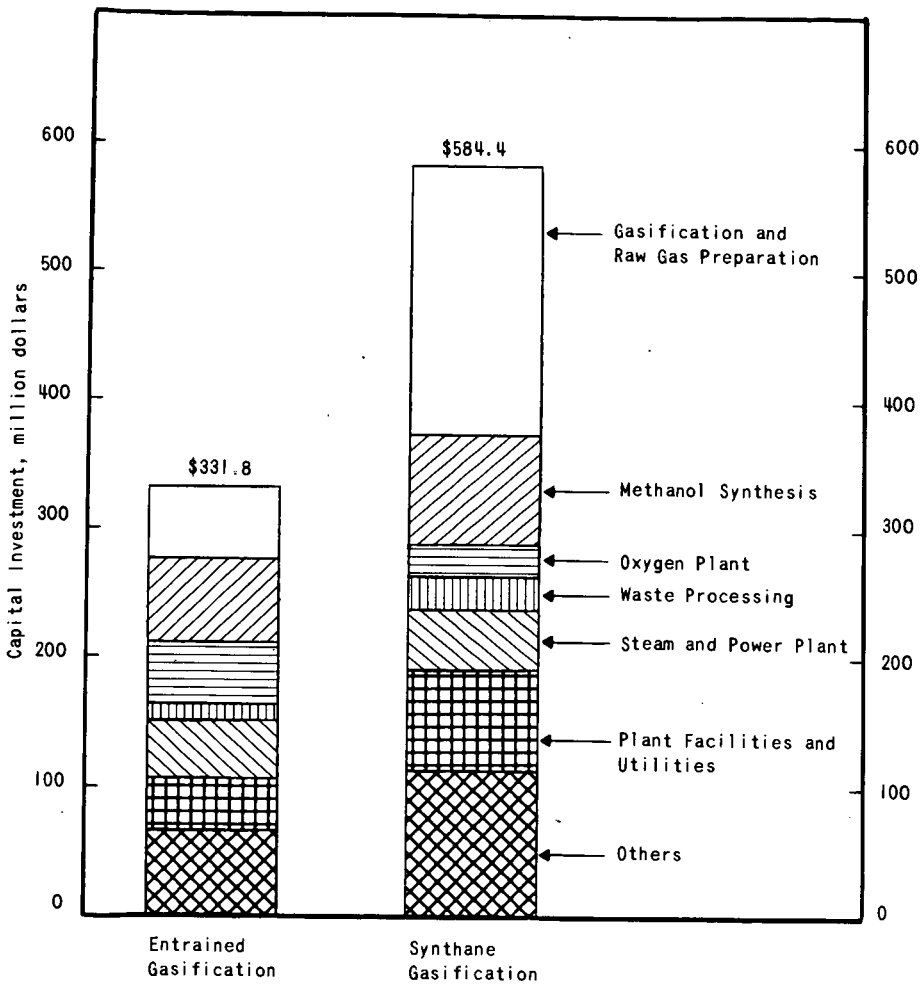

FIGURE 4. - Capital Investment Requirements for Two Processes and Their Distribution

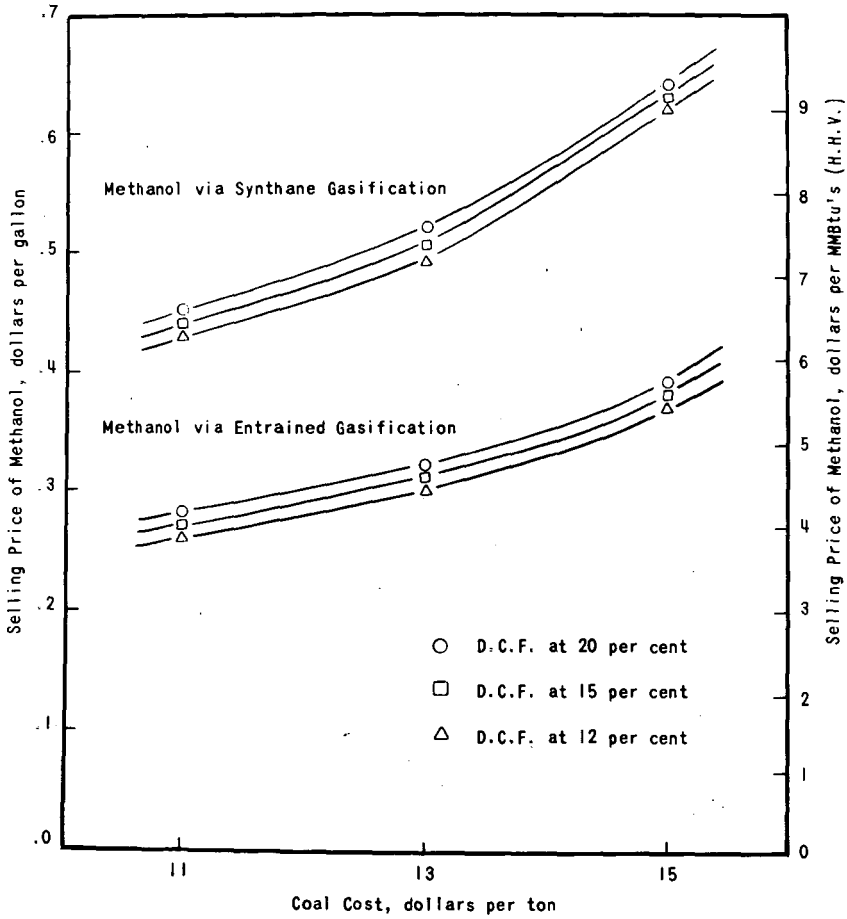

FIGURE 5. - Selling Price of Methanol at Different Coal Prices with D.C.F. Rate of Return as a Parameter

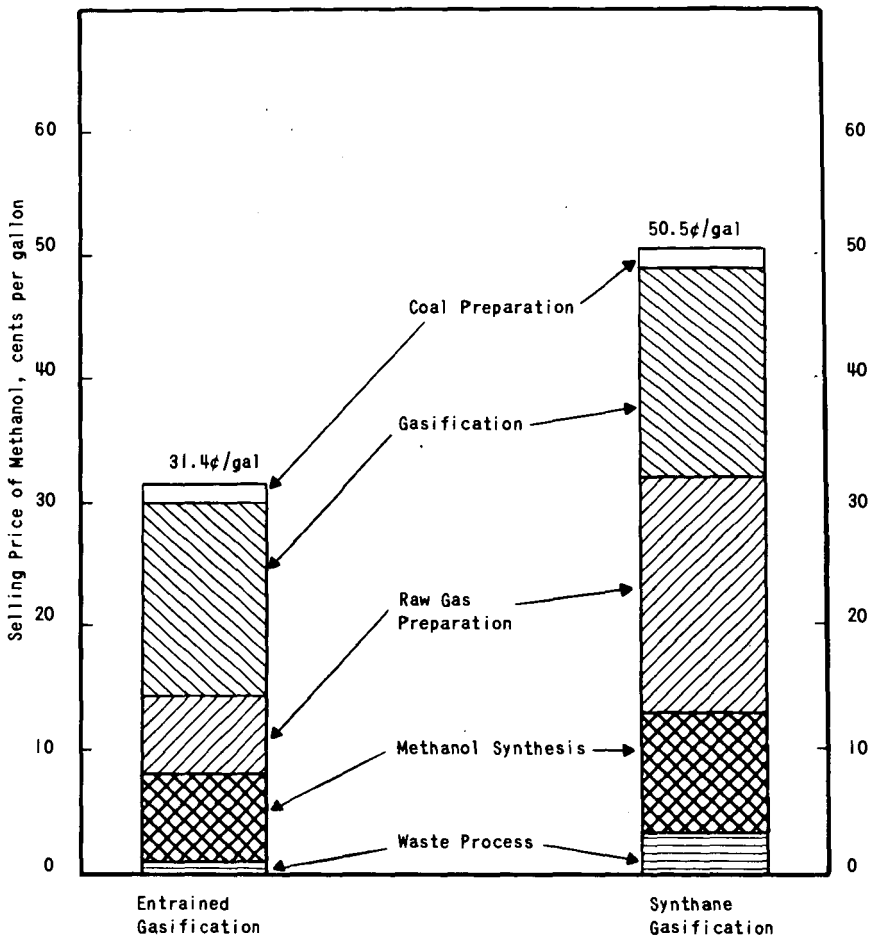

FIGURE 6. - Selling Price of Methanol and its Distribution Calculated Based on Unit Cost Procedure. (Selling Prices are Coal at $13/ton and D.C.F. Rate of Return at 15 per cent)