EVALUATION OF USE OF SYNGAS FOR COAL LIQUEFACTION

Rand F. Batchelder and Yuan C. Fu

Pittsburgh Energy Research Center
U.S. Department of Energy
4800 Forbes Avenue, Pittsburgh, Pennsylvania 15213

INTRODUCTION

With the feasibility of coal liquefaction having been demonstrated over forty years ago, the major emphasis since then has been on process modifications and catalyst development to improve the process economics [1]. Cost analysis of a typical coal liquefaction process [2] reveals that as much as 30 percent of the overall cost is related to hydrogen production. The proposed modification is to use syngas (H_2 + CO) and steam instead of H_2 as feed gas to the reactor. The advantages of this modification are presented.

The bench scale approach in the direct liquefaction of coal consists of treating a slurry of coal in solvent under high H_2 pressure at temperatures of 400-475° C. The large coal molecules fragment thermally and are hydrogenated via hydrogen transfer from a donor solvent. The liquid product is formed as the H/C atomic ratio of coal increases from 0.7 to an approximate value of 0.9-1.0. Lighter liquid products could be formed with additional H_2 uptake. A catalyst would serve to promote hydrogenation and desulfurization processes during liquefaction. The required H_2, usually 3-6 weight percent of the coal feed, is produced by gasification of coal and residual char to produce a synthesis gas. The synthesis gas as produced is a mixture of H_2, CO, H_2O, and some CO_2. The "raw" syngas is then passed through a shift converter to produce CO_2 and additional H_2. Since the gas still contains about 2-3 percent residual CO, further processing will be required before the gas can be used with a CO-sensitive catalyst [3].

SYNTHESIS GAS CONCEPT

The syngas approach is to bypass the expensive gas purification and shift conversion step and send the product from the gasifier directly to the liquefaction reactor along with the recycle gas and added steam. The CO in the feed gas reacts with steam to form H_2 ($CO + H_2O \longrightarrow H_2 + CO_2$) in the liquefaction reactor rather than separately in the water-gas shift system. This can be accomplished by utilizing a bifunctional catalyst in the liquefaction reactor, consisting of the conventional $CoMo\text{-}SiO_2\text{-}Al_2O_3$ for liquefaction and desulfurization, which is impregnated with K_2CO_3 to catalyze the shift reaction.

The obvious advantage of this modification is the elimination of the capital and operating cost of the purification and shift steps. In addition there will be a slight improvement in the thermal efficiency of the process. There is a need, however, for a larger recycle gas cleanup step capable of removing both H_2S and CO_2. Before the process can be considered viable it must be proven that the liquefaction activity in the presence of CO, H_2 and H_2O is comparable to that with H_2.

To evaluate the effect of substituting synthesis gas for H_2, we decided at first to look at the SYNTHOIL process. The experimental section explains how the direct catalytic coal liquefaction performance using H_2 and H_2-CO was compared in a set of autoclave experiments. The results of a batch reactor cannot be simply used to predict the steady state conditions in a continuous commercial reactor. An attempt was made, however, to calculate flow conditions for coal liquefaction processes using H_2 and H_2-CO on the same basis using autoclave data. The objective is a preliminary study to evaluate and compare the potential merit of using syngas rather than to calculate the accurate results for a commercial process. The evaluation of SYNTHOIL by Kattel [2] was used as the basis for the conceptual design.

EXPERIMENTAL AND RESULTS

The concept of liquefying coal with syngas was tested in a stirred autoclave. The autoclave was charged with 30 grams of West Virginia bituminous coal, 70 grams of Solvent Refined Coal process solvent, 10 grams of H_2O, and 2-3 grams of crushed CoMo-K_2CO_3 catalyst. The autoclave was then charged with a 2:1 H_2-CO gas mixture to 1500 psi (gage), heated to 450° C (operating pressure 2800-3000 psi), held at 450° C for 15 min. and then rapidly cooled by running water through an immersed cooling coil.

The CoMo-K_2CO_3 catalysts were prepared in three ways: (1) by blending ground CoMo-SiO_2-Al_2O_3 catalyst (Harshaw 0402T) with K_2CO_3 powder, (2) by impregnating the CoMo catalyst with aqueous carbonate solution, (3) by introducing K_2CO_3 early in the preparation of CoMo catalyst in place of silicated alumina and keeping the ratios of Co and Mo to alumina constant. We have also tested CoMo catalysts impregnated with sodium carbonate, potassium acetate and barium acetate, NiMo catalyst impregnated with K_2CO_3, and NH_4Mo catalyst. Some results have been presented previously [2]. Table I shows some representative results as well as hydrotreating data obtained with pure H_2 and CoMo-SiO_2-Al_2O_3 catalyst. The performances with H_2-CO and H_2 compare very closely in all categories.

PROCESS EVALUATION

Using the yields obtained from the autoclave experiments and the process parameters of the SYNTHOIL process, material balances were derived for both the H_2-CO and H_2 systems. An energy balance was then calculated for the H_2-CO process scheme. Finally an economic comparison of the two alternatives was performed, based on an economic evaluation of the SYNTHOIL process made by Katell, et al [2]. The benefit of using a high pressure gasifier (such as in the Texaco process) and a modification of the Exxon Donor Solvent Process using syngas were also examined.

A. Direct Catalytic Liquefaction of Coal

The flowsheet for the modified direct catalytic liquefaction process is shown in Figure 1. Synthesis gas from the gasifier is sent directly to the liquefaction reactor eliminating the shift and purification steps. Steam is added to the liquefaction reactor to promote the water-gas shift reaction. Now that this reaction is taking place in the liquefaction reactor, the CO_2 produced there must be removed in the recycle gas cleanup step. Therefore, the recycle gas cleanup step must be designed to remove both CO_2 and H_2S. It is desirable to produce a concentrated stream of H_2S to allow efficient use of the Claus process for converting H_2S to sulfur. The concept employed in the Giammarco-Vetrocoke process [5] for acid-gas removal meets these requirements. It will remove both CO_2 and H_2S from a gas stream and process it into two separate streams of CO_2 and H_2S.

The aqueous stream from the vapor-liquid separators is sent to an ammonium sulfate and sulfuric acid recovery process. The product slurry from the high temperature separator is centrifuged. The underflow from the centrifuge is sent to a char de-oiling process for recovery of oil entrained in the solids. Unconverted char from this step is sent to the gasifier for further carbon utilization.

TABLE 1. Hydrotreating of Bituminous Coal[a]

(Coal: SRC Liquid = 1:2.3, 3000 psi, 450° C, 15 min)

	Syngas (H_2:CO = 2:1)						H_2		
Catalyst	CoMo-K_2CO_3[b]	CoMo-K_2CO_3[b]	CoMo-K_2CO_3[c]	CoMo-BaAc[b]	NiMo-K_2CO_3[b]	NH_4Mo	CoMo[d]	CoMo[e]	NH_4Mo
% K_2CO_3	11.2	5.0	7.7	(9.9)[f]	10.1	-	-	-	-
Surf. Area m^2/g	74	133	136	141	140	-	123	153	-
Conversion, %	94	90	90	89	89	90	94	91	93
Oil yield, %	68	60	63	61	59	57	71	62	62
Asphaltene formed, %	42	42	32	24	32	19	30	25	37
S in oil product, %	0.40	0.44	0.41	0.41	0.40	0.37	0.39	0.33	0.44
Kinematic viscosity, CS+ at 60° C	20	18	18	16	21	13	15	13	20
Syngas or H_2 consumed, SCF/lb maf coal	8.6	9.9	10.0	10.0	9.0	11.2	10.7	11.6	10.2

[a]Data are given in weight percent of maf coal

[b]CoMo or NiMo impregnated with K_2CO_3 solution

[c]Laboratory prepared sample with K_2CO_3 substituted for alumina

[d]Harshaw 0402

[e]Laboratory prepared sample with the same composition as Harshaw 0402

[f]Percent barium acetate

Mass Balance - The basis of the flowsheet calculation is briefly described in the Appendix. There are two major problems associated with the batch autoclave data: (1) the solvent is not a recycle solvent derived at the identical steady state condition, and (2) the material balance is usually poor with a recovery in the range of 94-98%. Batch data from the autoclave experiments were used in the calculation as shown in the Appendix. The conversion of CO is calculated by assuming water-gas shift equlibrium at 475° C (28° C approach) with a H_2:CO:H_2O feed of 2:1:0.4. The resulting yields for a continuous reaction are shown in Table 2. The flowsheet derived from these yields is shown in Figure 1.

The overall mass balances for the H_2-CO and H_2 processes were obtained on the basis of one ton of West Virginia bituminous coal feed (See Table 3). The mass balance over the reactor, which operates at 4000 psig and 450° C, is based on the simulated yields. The design parameters used in the study are listed in the Appendix. It was assumed that the recycle gas scrubber provided complete removal of CO_2 and H_2S. The flow and composition of the off-gas from the vapor-liquid separators were estimated from vapor-liquid equilibria of the various components with the liquid oil at the separator temperatures of 150 and 40° C. The gasifier mass balance was based on the total gas demand, coal and char feed, operating condition of 450 psi and 982° C, 95% carbon conversion and a water-gas shift equilibrium at 1010° C (28° C approach).

Energy Balance - The thermal efficiency of the SYNTHOIL Process has been estimated by Akhtar et al [6]. The energy balance for the H_2-CO process was computed and is shown in Figure 2. It is based on the net heats of combustion at the specified temperature of each stream, neglecting pressure effects. The net heats of combustion of the coal (12,390 Btu/lb), oil (16,300 Btu/lb), and the char (4,500 Btu/lb) were obtained experimentally. The heat capacities for coal, char, ash and oil were obtained from IGT's Coal Conversion Data Book. The energy balance across the reactor was calculated using eqn. 6 in the Appendix, assuming an adiabatic reaction with an estimated heat loss. The conceptualized plant is totally self-sufficient with the coal being the only energy input. The plant contains its own steam and electricity plant. The overall thermal efficiency is 75.6 percent as compared to values of 67.8 [2] and 74.9 [6] percent for the SYNTHOIL process using H_2. The advantage of the syngas system is a result of the elimination of the inefficient two-stage shift reactors.

Economics - The methods used to perform the economic analysis of the two alternative cases followed those used in Katell's report. The main objective of this economic evaluation is to obtain a relative cost comparison of the two processes rather than to yield accurate estimates. The sequence of steps in the evaluation was as follows: (1) size major equipment, (2) cost major equipment, (3) use standard factors to cost miscellaneous equipment, (4) calculate utility balance, (5) size and cost utility sections, (6) determine operating costs and (7) do a discounted cash flow analysis over the life of the plant to determine the product selling price at various rates of return and coal prices. The analysis was carried out for both the CO-H_2 and H_2 cases. A unit cost table, which shows the cost distribution among the various sections of the process, is shown in Table 4. Two major differences are apparent in the unit cost table. The recycle gas cleanup and byproduct recovery sections in the H_2-CO process are more expensive than that in the H_2 process because of the necessity of removing CO_2 in addition to H_2S in this stage. The cost of the shift and purification section is \$1.90/bbl in the H_2 process, but is totally absent in the H_2-CO system. Thus the H_2-CO system results in a net cost advantage of \$1.59/bbl or about 14% of the total process cost.

TABLE 2. Product Yields and Analysis at Steady State
(Basis 100 lb of maf coal feed)

Input		Syngas	H_2
maf coal		100.00	100.00
H_2		1.17	3.79
CO		35.20	0.00
H_2O		25.81	0.00
Total		162.18	103.79
H_2 or H_2 + CO consumption, SCF		661	675
Output			
C_1-C_4		11.37	10.80
Oil		77.38	77.87
H_2O		9.08	5.99
CO_2		55.31	0.00
H_2S		2.54	2.54
NH_3		0.50	0.59
Char		6.00	6.00
		162.18	103.79
Elemental	Coal	Product Oil	Product Oil
C	73.8	88.3	88.3
H	5.2	7.5	7.7
O	7.2	2.6	2.5
N	1.3	1.2	1.1
S	3.8	0.4	0.4
Ash	8.2	-	-
Moisture	0.5	-	-

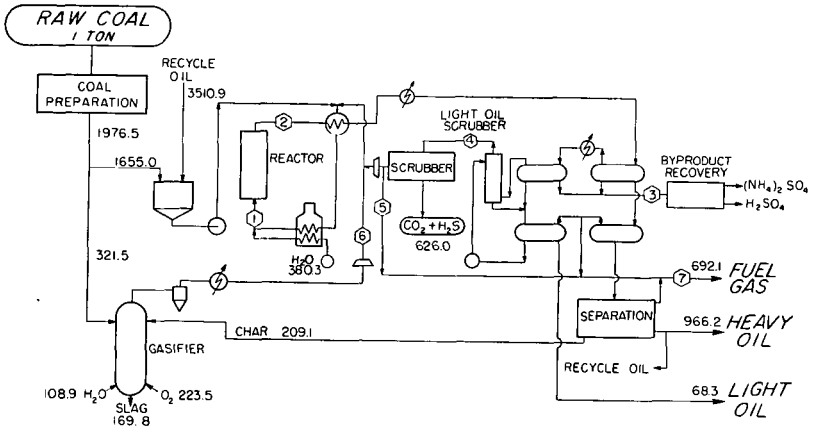

Figure 1—Process flow diagram using SYNGAS.

STREAM COMPOSITION

STREAM	1		2		3		4		5		6		7	
COMPONENT	lbs	(vol %)	lbs	(vol %)	lbs	(vol %)	lbs	(vol %)	lbs	(vol %)	lbs	(vol %)	lbs	(vol %)
MAF COAL	1511.4		0											
ASH	160.0		160.0											
CHAR	16.6		107.3											
OIL	3478.2		4647.8				26.1		0.2				144.8	
GAS COMPOSITION														
H_2O	390.0	(9.50)	137.2	(3.58)	137.2						1.4	(0.22)		
H_2	239.3	(52.08)	221.5	(51.65)			217.0	(57.16)	4.3	(57.83)	26.6	(36.37)	11.5	(26.37)
CO	1628.1	(25.50)	1096.1	(18.40)			1052.8	(19.96)	21.1	(20.19)	596.4	(58.67)	64.3	(10.60)
C1	391.9	(10.72)	452.4	(13.26)			399.8	(13.23)	8.0	(13.39)			65.0	(18.71)
C2	72.2	(1.06)	111.5	(1.75)			73.6	(1.31)	1.5	(1.32)			39.3	(6.06)
C3	33.8	(0.34)	81.2	(0.88)			34.5	(0.42)	0.7	(0.43)			47.4	(5.03)
C4	5.7	(0.04)	30.2	(0.24)			5.8	(0.05)	0.1	(0.05)			24.5	(1.94)
H_2S	36.3	(0.47)	74.8	(1.03)	15.1		17.9	(0.53)	0		36.3	(2.94)	41.8	(4.38)
CO_2	20.2	(0.20)	856.1	(9.15)			608.1	(7.34)	0		20.2	(1.26)	247.9	(26.00)
NH_3	0	(0)	7.6	(0.21)	7.6									
N_2	5.5	(0.09)	5.5	(0.09)							5.5	(0.54)	5.5	(0.90)
Total....	7989.2	(100)	7989.2	(100)	159.9		2435.6	(100)	35.9	(100)	686.4	(100)	692.0	(100)
scf....	81820		76350				67610		330		13030		7780	

9-7-77 L-15580

TABLE-3 OVERALL MASS BALANCE

	H_2	H_2/CO
In:		
Raw Coal	2000.0	2000.0
Gasifier Steam Feed	141.4	108.9
Gasifier O_2 Feed	187.0	223.5
Shift Converter Steam	558.2	0
Reactor Water Feed	0	380.3
Total	2886.6	2712.7
Out:		
Water Condensate	249.1	30.4
Waste Water	118.9	159.9
Slag	169.6	169.8
Fuel Gas	365.0	692.1
$H_2S + CO_2$	946.4	626.0
Oil Product	1037.6	1034.5
Total	2886.6	2712.7

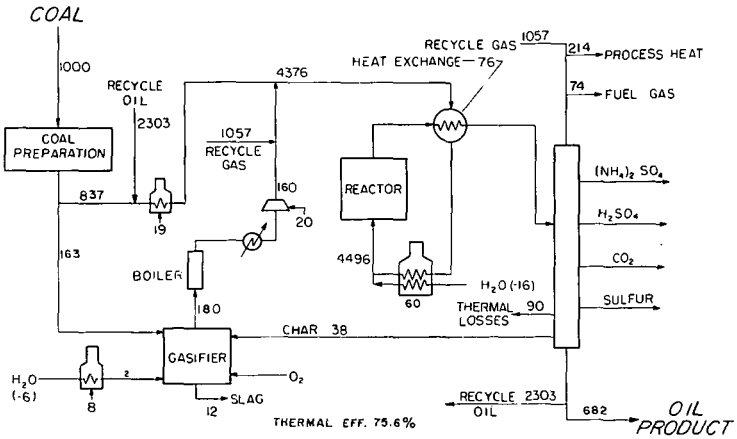

DATA BASIS: 1000 BTU INPUT COAL, HEAT OF COMBUSTION (NET)

Figure 2 - Thermal balance.

9-7-77 L-15579

TABLE 4. Unit Cost, $/bbl Product Oil

Cost	Operating	Capital	Credits	Total
Coal + Paste Preparation	0.899	0.670	0	1.569
Hydrogenation	2.102	2.180	-2.366	1.916
Heat Exchange	0.666	1.178	0	1.844
Char De-oiling	.205	.362	-0.315	.252
Gasification	1.985	.174	0	2.159
Gas Cleanup + Byproduct Recovery	.819	.837	-.105	1.551
	.593	.750	-.105	1.238
Shift + Purification	0	0	0	0
	1.206	.694	0	1.900
Flue Gas Processing	.431	.431	-.232	0.630
Total	7.107	5.832	-3.018	
	8.087	7.439	-3.018	
				9.921
		Processing Cost		11.508
		Coal Cost		9.453
		Oil Cost		19.374
				20.961

Underline - Cost using H_2
Otherwise both H_2 and H_2-CO systems have the same cost.

Basis: 25,000 BBL/D
Cost based on April 1977 CE index
WVa Coal - $25/T
15% return on investment

High Pressure Gasifier - A beneficial modification to the H_2-CO process is to employ a high pressure gasifier to be operated at a pressure in the range of 2500-3000 psi, equivalent to that required in a liquefaction reactor. This change would further increase the thermal efficiency and improve the economics. From the energy balance (Figure 2) we see that 2% of the input energy exists as latent heat in the hot gasifier output. Also 2% of the input energy is used to compress the gasifier product gas. By employing a high pressure gasifier all of the latent heat is recovered, the inefficient gasifier heat exchanger is eliminated, the make-up gas compressor is not required and the reactor preheat duty is reduced. Thus the use of higher pressure gasifier increases thermal efficiency by about 4 percent. A minor offsetting change is the increased pressure of O_2 and steam necessary to feed the gasifier.

B. Extractive Hydrogenation of Coal

Coal liquefaction processes by extractive hydrogenation such as the Exxon Donor Solvent Process can also be benefited economically by using syngas in place of H_2. A conceptual process scheme is presented in Figure 3. Coal is dissolved in a recycling solvent in the absence of catalyst under H_2-CO pressure, and part of the liquid product is subsequently hydrotreated with syngas and steam in the presence of CoMo-K_2CO_3 catalyst to make the recycle solvent. Experimental data were obtained by initially hydrotreating an SRC solvent with syngas and steam in the presence of CoMo-K_2CO_3 catalyst and subsequently using this hydrotreated solvent to extract coal in the absence of catalyst. Table 5 shows the autoclave experimental results of hydrotreating the SRC solvent with syngas and H_2. Table 6 shows the comparison of using the syngas hydrotreated solvent and the H_2 hydrotreated solvent for coal solvolysis under H_2-CO and H_2 pressures respectively. From both tables, no significant difference in the quality of the product oil or solvent was observed between the syngas and H_2 systems.

REFERENCES

1. Bergius, F., German Patent 303272 (1922).

2. Kattel, S., "SYNTHOIL Process-Liquid Fuel from Coal Plant," Report No. 75-20, Bu. of Mines, Morgantown, WVa., Jan. 1975.

3. Vernon, L. W., Pennington, R. E., U.S. Patent 3,719,588 (1973).

4. Fu, Y. C., Illig, E. G., Ind. Eng. Chem., Proc. Des. Dev., Vol. 15, No. 3, 392, 1976.

5. Riesenfeld, F. C., Mullowney, J. F., Oil and Gas J., Vol. 57, No. 20, 86, 1959.

6. Akhtar, S., Lacey, J. J., Weintraub, M., Reznik, A. A., Yavorsky, P.M., "The SYNTHOIL Process -- Material Balance and Thermal Efficiency," Paper No. 356, Bu. of Mines, Pittsburgh Energy Research Center, Dec. 1974.

7. IGT, "Preparation of a Coal Conversion Systems Technical Data Book," Final Report FE-1730-21, 1976.

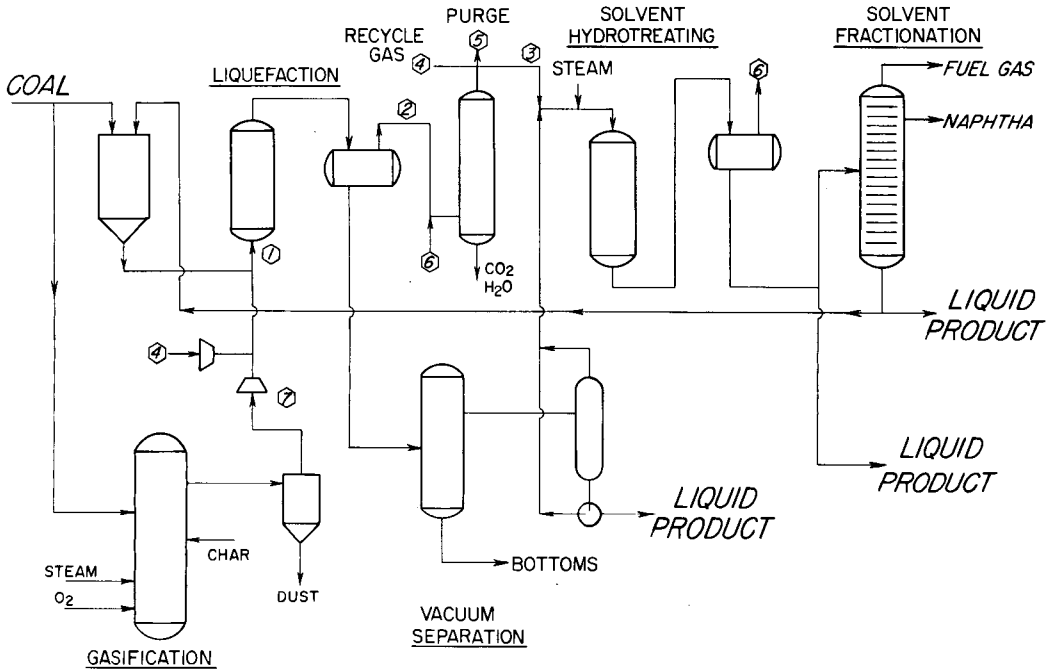

Figure 3 - Solvolysis of coal using SYNGAS.

5-19-77 L-15382

TABLE 5. Hydrotreating of SRC Solvent
(425° C, 60 min)

	Original	Syngas (H_2:CO = 2:1)	H_2
Catalyst	-	CoMo-K_2CO_3	CoMo
H_2O added pts/100 pts		10	0
Initial Press, psi		1220	1520
Operating Press, psi		2600	2450
Product Analysis, %			
C	88.8	89.1	89.4
H	7.4	7.6	8.0
N	1.1	1.0	0.8
S	0.65	.42	.14
O	2.05	1.88	1.66
Kinematic Viscosity, CS at 60° C	12.2	7.8	5.4

TABLE 6. Coal Liquefaction by Solvolysis
(solvent: coal = 2.3:1, 3000 psi, 450° C, 15 min)

	Syngas (H_2:CO = 2:1)		H_2	
Solvent	SRC	Treated SRC	SRC	Treated SRC
Conversion, %	89	90	89	91
Asphaltene formed, %	42.7	32.6	49.3	25.6
S in oil prod., %	0.64	0.54	0.65	0.44
Kinematic viscosity, CS at 60° C	30.1	22.7	30.8	14.8

APPENDIX

Design Calculations

Autoclave Reaction

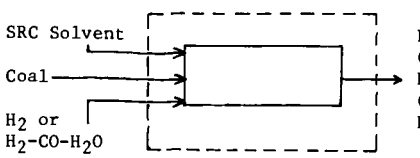

Continuous Reaction

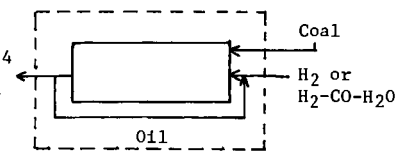

Elemental Balance for Continuous Reaction

Y_i = yield,(lbs of i out - lbs of i in)/ lb maf coal

F_i^k = wt. fraction of element k in component i

C $$F^C_{Coal}-(Y*F^C)_{CO} = (Y*F^C)_{C_1-C_4}+(Y*F^C)_{CO_2}+(Y*F^C)_{Oil}+(Y*F^C)_{Char} \quad (1)$$

H $$F^C_{Coal}-Y_{H_2} = (Y*F^H)_{C_1-C_4}+(Y*F^H)_{H_2O}+(Y*F^H)_{NH_3}+(Y*F^H)_{H_2S}+(Y*F^H)_{Oil}+(Y*F^H)_{Char} \quad (2)$$

O $$F^O_{Coal}-(Y*F^O)_{CO} = (Y*F^O)_{H_2O}+(Y*F^O)_{CO_2}+(Y*F^O)_{Oil}+(Y*F^O)_{Char} \quad (3)$$

N $$F^N_{Coal} = (Y*F^N)_{NH_3}+(Y*F^N)_{Oil}+(Y*F^N)_{Char} \quad (4)$$

S $$F^S_{Coal} = (Y*F^S)_{H_2S}+(Y*F^S)_{Oil}+(Y*F^S)_{Char} \quad (5)$$

Energy Balance for Continuous Reactor

H_i = net enthalpy of combustion of component i, BTU

$$\sum_i^{in} H_i T_{in} = \sum_i^{out} H_i T_{out} + \text{heat loss} \quad (6)$$

Assumptions

1. The yields of C_1-C_4 gas($Y_{C_1-C_4}$) and char(Y_{Char}) and the elemental compositions of C_1-C_4, oil, and char observed in the autoclave experiment are used in the continuous reaction design.
2. The yield of carbon monoxide is calculated assuming the water-gas shift reaction to be at equilibrium at 477°C (28°C approach) with a H_2:CO:H_2O reactor feed of 2.05:1:0.4. It is also assumed that carbon dioxide is involved only in the water-gas shift reaction, thus $Y_{CO_2} = -Y_{CO}$.
3. The remaining unknowns are Y_{H_2},Y_{H_2O},Y_{H_2S}, Y_{NH_3}, and Y_{Oil}. These are determined by solving eqns. 1-5 simultaneously. The other unknown,T_{out}, is solved from eqn. 6.

Design Parameters

Oil:Coal Recycle Ratio = 2.12
SCF/lb Slurry Reactor Feed = 15.8
Reactor Feed Rate= 280 lb/hr-ft^{3}catalyst
Reactor Inlet Temp = 425°C
Reactor Inlet Press = 4200 psig
Reactor Exit Temp = 449°C
Reactor Exit Press = 4000 psig
Process Heater Eff = 80%
Electric Generation Eff = 40%

Economic Evaluation

Based on April 1977 CE Index
15% Discounted Cash Flow