Aqueous Effluents From the SYNTHOIL Process

Sayeed Akhtar, Nestor J. Mazzocco and Paul M. Yavorsky

Department of Energy
Pittsburgh Energy Research Center
4800 Forbes Avenue
Pittsburgh, PA 15213

INTRODUCTION

Conversion of coal to an environmentally acceptable utility fuel is a high priority objective of the Department of Energy. Work on several processes designed to convert coal to a low-sulfur, low-ash liquid or solid fuel is in progress. One such process under development is the SYNTHOIL process using direct hydroliquefaction. A unit of 1/2 ton of coal slurry per day capacity has been in operation for over three years, and a larger process development unit of 10 tons of coal per day capacity is under construction. The aqueous effluents from a conceptually integrated commercial SYNTHOIL plant are reviewed in this presentation and the analytical results for the one aqueous effluent available from the existing 1/2 ton per day SYNTHOIL unit are presented.

PROCESS DESCRIPTION

Figure 1 is a flow sheet of the SYNTHOIL process. Hydrogen and a slurry of pulverized coal in a recycle oil are preheated and passed through a turbulent-flow, fixed-bed reactor packed with pellets of Co-Mo/SiO_2-Al_2O_3 catalyst. The turbulence provides vigorous contacting of the gas-slurry mixture which leads to high conversion in short residence time. The reactor is operated at 2,000 to 4,000 psi and 450° C, at which condition coal is converted to liquid hydrocarbons while sulfur, nitrogen and oxygen are eliminated as H_2S, NH_3 and H_2O respectively. The product stream from the reactor is cooled to 250° F and led to a gas disengager where liquids and unreacted solids are separated from gases and vapors. The liquid stream is passed through a centrifuge to remove the unreacted solids consisting of mineral matter and unconverted coal. The centrifuged liquid is a low-sulfur, low-ash fuel oil. A portion of the whole centrifuged liquid is recycled to convey more coal into the plant while the rest of it is available as the net product. An additional quantity of fuel oil is obtained by pyrolyzing the solids from the centrifuge. The residue, or char, from pyrolysis is gasified to produce hydrogen for the process.

The gases from the gas disengager are contacted with water at plant pressure to dissolve ammonium sulfide, cooled and led to a second gas disengager where the scrub water and any organic condensates are separated from gases. The layer of organic condensates is combined with the liquid products from the first gas disengager while the aqueous layer is a waste stream. In addition to the scrub water, this waste stream will also contain any water going in with coal or formed chemically during liquefaction. The gas from the second disengager is further purified by washing with an oil to remove hydrocarbon vapors, and then with an amine to remove acid gases. The purified gas is combined with make-up hydrogen and is recycled to the reactor. The gas purification is conducted at the plant pressure to minimize the cost of recycling the purified gas. The H_2S recovered by amine wash is converted to elemental sulfur in a conventional Claus plant.

Results from operation of a 1/2 ton per day SYNTHOIL unit are reported in (1,2,3).

AQUEOUS EFFLUENTS

The aqueous effluents from a commercial SYNTHOIL plant will consist of the following:

1. Rain run-off from the coal storage and handling area;
2. Water evolved from coal during drying and pulverization;
3. A combined stream of reactor gas scrub water, the residual water in the pulverized coal introduced into the reactor, and the water produced chemically during coal hydrogenation;
4. Gas scrub water and chemically produced water from the pyrolyzer for the centrifuged solid;
5. Aqueous effluents from the char gasifier for hydrogen production;
6. A waste water stream from the Claus reactor.

Effluent 1 will be obviously intermittent while effluents 2 to 6 will be continuous.

Effluents from maintenance operations, e.g. boiler blowdowns, demineralizer discharges, cooling tower blowdowns and sewage treatment facility discharges are not included in this discussion.

Rain Run-Off

Effluent 1, the rain run-off, will be similar to mine drainage which has been a subject of considerable research (4,5,6). The run-off will contain suspended coal particles, leachates from coal's mineral matter, and sulfuric acid. Iron pyrite, a mineral almost always present in coal, reacts with atmospheric oxygen in the presence of water to form ferrous sulfate and sulfuric acid according to the following reaction:

$$2FeS_2 + 7O_2 + 2H_2O \rightarrow 2FeSO_4 + 2H_2SO_4 \qquad 1)$$

Ferrous sulfate is not a stable product. It oxidizes to ferric sulfate by reacting with oxygen and sulfuric acid as follows:

$$4FeSO_4 + 2H_2SO_4 + O_2 \rightarrow 2Fe_2(SO_4)_3 + 2H_2O \qquad 2)$$

Reaction 2 will appear to be welcome inasmuch as sulfuric acid is consumed therein but the relief is short-lived: ferric sulfate hydrolyzes to ferric hydroxide and sulfuric acid, the former precipitating out as "yellow boy".

$$Fe_2(SO_4)_3 + 6H_2O \rightarrow 2Fe(OH)_3 + 3H_2SO_4 \qquad 3)$$

The sequence of reactions 1, 2 and 3 is not the only mechanism for the formation of sulfuric acid. Iron pyrite may react with oxygen, in the absence of water, as follows:

$$FeS_2 + 3O_2 \rightarrow FeSO_4 + SO_2 \qquad 4)$$

The ferrous sulfate produced in reaction 4 may contribute to the formation of sulfuric acid by way of reactions 2 and 3. Ferrous sulfate may also be formed by a reaction of ferric sulfate and iron pyrite. It has been claimed that microorganisms may have a role in the formation of sulfuric acid from iron pyrite by catalyzing one or more of the above reactions (6,7).

An obvious solution to the problem of the rain run-off from the coal storage and handling area of a SYNTHOIL plant will be to store and handle coal under a shed. This solution, however, may be too costly in which case the run-off will be treated in the same manner as acid mine drainage. The most developed process for treating acid mine drainage consists of neutralization with lime, or limestone, followed by aeration to facilitate oxidation of Fe^{++} to Fe^{+++}. The water is then impounded in a lagoon for "yellow boy" to settle out. Al and Mg, frequently present as dissolved salts in mine drainage, also settle out as hydroxides. The hydroxides of Fe, Al, and Mg are very gelatinous and bring down with them suspended particles of coal or any other insoluble matter. The clean water, although free from the contaminants originally present in it, is now saturated with calcium sulfate which has a solubility of about 0.3 g/100 ml of cold water. It is therefore released only intermittently in natural waterways and preferably during periods of high flow to facilitate rapid dilution of the calcium sulfate. The water may be rendered suitable for industrial use by secondary treatment, e.g. reverse osmosis or ion-exchange, but at a considerable cost as of now. Reverse osmosis and ion-exchange have been investigated also directly with acid mine drainage (8).

Water From Coal Drying

The feed to a SYNTHOIL reactor is a slurry of coal in recycle oil. For a stable slurry, coal is pulverized to approximately 70 pct through 200 mesh and 100 pct through 50 mesh, U.S. standard sieves. Efficient pulverization to this fineness is not practicable if coal contains more than 3 pct moisture. Since most coals contain more than this, they must be dried for pulverization. In industrial practice, drying and pulverization are conducted simultaneously by passing a hot gas through the pulverizer. The gas also lifts the pulverized coal from the milling chamber to a classifier from where the oversize particles are returned to the mill while the coal of desired particle size range is conveyed, by the gas, to a cyclone separator. The cyclone separates the entrained coal from the gas, after which a portion of the gas is vented to purge moisture while the balance is mixed with a supply of hot make-up gas and returned to the pulverizer. In establishments of good housekeeping, the gas is filtered through a baghouse before venting.

The SYNTHOIL process is designed primarily for high-sulfur coals from the eastern parts of the United States, which contain 6 to 12 pct moisture. Assuming average moisture contents of 8 pct and 3 pct in the coal before and after pulverization respectively, approximately 12,500 gph of water will be released from the coal in a SYNTHOIL plant processing 25,000 tons of coal per day. Although at present no effort is made in pulverized-coal-consuming plants to condense and collect the water released by coal during the combined drying and pulverization operation, in the coal liquefaction plants of the future it may be necessary to collect this water to conserve the resource. Information on the contaminants to be expected in this water is not available but it may be surmised that the condensed stream will contain particulate contaminants and, possibly, traces of organic compounds released from the coal at the temperature of drying.

Reactor Gas Scrub Water (Sour Water)

The origin of this effluent is explained in the section on process description. In addition to the water injected into the gas stream to dissolve out ammonium sulfide, the effluent will also contain the process make water, organic condensates, and the entrained contaminants in the reactor gas. An analysis of this effluent from the 1/2 TPD SYNTHOIL unit is given in table 1. For purposes of comparison, analysis of the influent water is also included in the table. Two sets of data are presented, one where the gas was scrubbed with distilled water and the other where the gas was scrubbed with a dilute solution of NaOH in distilled water. In each case, the effluent was an emulsion which underwent a rapid but partial clarification in 2 to 4 hours,

TABLE 1.- Analysis of SYNTHOIL reactor gas scrub water (sour water)

	Gas Scrubbed With Distilled Water		Gas Scrubbed With a Solution of NaOH in Distilled Water	
Group A Analyses	Influent	Effluent	Influent	Effluent
Total carbon, mg/l	4	900	12	7,500
Total inorganic carbon, mg/l	≤2	150	6	140
Total organic carbon, mg/l	4	750	6	7,270
Chemical oxygen demand (COD), mg/l	-	8,200	≤10	27,200
Phenol, mg/l	-	250	-	5,100
SCN^-, mg/l	-	29	-	90
CN^-, mg/l	-	0.03	-	0.03
Suspended solids, mg/l	-	≤4	-	≤2
pH	5.7	8.4	10.1	8.7
Cl^-, mg/l	≤1	5	6	15
NH_3, mg/l	≤2	2,500	≤10	3,000
Biochemical oxygen demand (BOD), 5-day, ppm	-	630	-	13,500
S, mg/l	2	3,800	≤10	4,300
Group B Analysis				
Oil and grease, mg/l	-	85	-	1,150

after which no further clarification was visually detectable. The group A analyses of table 1, which extended over a period of about a week, were conducted on aliquots drawn from the water layer after the initial period of rapid clarification. For the group B analysis, samples of the effluent were collected directly in quart jars and the entire content of a jar was later analyzed as a single aliquot. Thus, the oily layer which had separated from water was included in the analysis of this group. The analyses were performed by the methods recommended by the American Public Health Association (9). The limits of detection and precision for these methods, where available, are also given in reference (9). Since NH_3 and H_2S interfere with BOD determination, the sample was acidified to remove H_2S and then made alkaline to remove NH_3 before BOD determination. A comparison of the results obtained by scrubbing the gas with distilled water and with a solution of NaOH in distilled water shows that significantly more phenols and other organic compounds were scrubbed out of the gas by the solution of NaOH than by pure water.

A survey of the metals in the influent and effluent is given in table 2. The survey was conducted by spark source mass spectrometry. Sufficient sample was evaporated onto the electrode material (graphite) to give a detection limit near 1 mg/l for most elements. The analysis is semiquantitative and reproducible to about a factor of three. The concentrations of metals in the influent and effluent are comparable, indicating that no significant amounts of metal compounds were scrubbed from the gas stream. The nature and concentration of the contaminants in the gas scrub water will of course depend on the coal being processed and the plant operating conditions. The effluent whose analysis is reported in tables 1 and 2 was obtained from the processing of a high-sulfur, hvBb coal from Homestead mine, Kentucky, at 450° C and 4,000 psi. The influent injection rate was 1 lb per lb of coal feed. Thus, 250,000 gph of this injected water will be released from a plant processing 25,000 tons of coal per day.

TABLE 2.-Survey of metals in the SYNTHOIL reactor gas scrub water (sour water)

Metal	Concentration, mg/l	
	Distilled Water Influent	Effluent
Na	11	12
K	0.2	0.1
Rb	≤ 0.002	-
Cs	0.0004	0.0003
Mg	≤ 1	≤ 7
Ca	0.1	0.1
Sr	0.007	0.01
Ba	0.007	0.01
Ti	-	≤ 0.1
Zr	≤ 0.03	≤ 0.01
V	0.01	0.01
Cr	0.006	0.01
Mo	≤ 0.004	≤ 0.005
Mn	0.01	0.01
Fe	1	2
Co	0.02	0.002
Ni	0.006	0.005
Cu	0.1	0.1
Zn	0.4	0.2
Cd	≤ 0.02	≤ 0.006
B	0.03	0.4
Al	0.2	0.4
Ga	≤ 0.009	≤ 0.001
In	≤ 0.003	≤ 0.001
Si	6	2
Ge	≤ 0.007	≤ 0.002
Sn	≤ 0.01	≤ 0.006
Pb	≤ 0.1	≤ 0.07
P	1	2
As	0.005	0.005
Sb	≤ 0.03	≤ 0.002

In addition to the injected water, the residual moisture left in the feed coal after drying will emerge with this stream. Since the average moisture content of the dried and pulverized coal was assumed to be 3 pct, approximately 8,000 gph of water will come from this source. The stream will also contain the water formed by the reaction of hydrogen with the oxygen in coal. The eastern coals that are likely to be processed in a SYNTHOIL plant contain about 8 to 12 pct oxygen. However, not all of this oxygen is eliminated as water during hydrogenation. Assuming an average oxygen content of 10 pct in the coal and 3 pct in the product oil, approximately 18,000 gph of chemically formed water will be released. Thus, the reactor gas scrub water effluent stream will add up to a total of about 276,000 gph. The treatment facility for this effluent must be designed to accommodate changes in the type and concentration of contaminants with changes in feed coal.

Pyrolyzer Gas Scrub Water

An analysis of the centrifuged solids obtained from the processing of Homestead mine, Kentucky, coal in the 1/2 TPD unit is given in table 3. Pyrolysis data for this

TABLE 3.- Analysis of centrifuged solids

Solvent analysis, wt pct	
Organic benzene insolubles	14.9
Asphaltenes	3.1
Oil	29.2
Ash	52.8
Ultimate analysis, wt pct	
Carbon	36.4
Hydrogen	3.7
Nitrogen	0.4
Sulfur	4.6
Oxygen, by difference	2.1
Ash	52.8

solid are not yet available, but the analysis suggests that considerable quantities of NH_3 and H_2S will be formed during pyrolysis, and the pyrolyzer off-gas will have to be scrubbed with water to remove ammonium sulfide. The water will also remove tar and entrained impurities in the gas.

A SYNTHOIL plant processing 25,000 tons of coal per day will generate approximately 6,000 tons of centrifuged solids in the same time. We estimate the scrub water requirement for the pyrolyzer processing these solids at 1 lb per lb of solids pyrolyzed (c.f. scrub water requirement of 1 lb per lb of coal for the reactor gas). Thus approximately 62,500 gph of effluent will be released. More information is needed to determine if this effluent can be combined with the reactor gas effluent for treatment.

The char from pyrolysis of the centrifuge solids will be gasified to produce hydrogen for the process requirement. The mixture of CO and H_2 from the gasifier will be washed with water to remove impurities before converting the gas to pure H_2 by the classical water-gas shift reaction. At present, no information is available on the composition of the char or its gasification properties. Consequently, no comment is possible on the contaminants in the aqueous effluent from scrubbing of the gasification products.

Water From Claus Reactor

The H_2S recovered from the amine scrubber, sour water stripper, solids pyrolyzer and the hydrogen plant will be converted to sulfur in a Claus plant. The reactions involved in the conversion of H_2S to S by the Claus process are the following:

$$H_2S + \frac{3}{2} O_2 \rightarrow SO_2 + H_2O \qquad 5)$$

$$2H_2S + SO_2 \rightarrow 3S + 2H_2O \quad . \qquad 6)$$

Reaction 6 -- known as the "Claus reaction" -- is catalyzed by bauxite.

For stoichiometric calculations, reactions 5 and 6 may be added to give the following equation:

$$3H_2S + \frac{3}{2} O_2 = 3H_2O \quad . \qquad 7)$$

H_2S and the stoichiometric quantity of air determined from equation 7 are introduced into a furnace. One-third of the H_2S is thus converted to SO_2, which then reacts with the remaining two-thirds of the H_2S to give elemental S. Although the combustion of one-third of the H_2S to SO_2 is complete in the furnace, the formation of S by the reaction of SO_2 with H_2S proceeds to only partial completion in the furnace. The product stream from the furnace is cooled in a waste heat boiler and then in a condenser where the product S separates out as a liquid. The gases containing SO_2 and H_2S are reheated and passed through a series of three or four catalytic Claus reactors with interstage cooling of the product stream to condense S and reheating of the unreacted gases. Overall conversion efficiencies as high as 98 pct have been claimed.

It will be seen from equation 7 that for each mole of S a mole of water is formed. Thus, if a coal containing 4 pct S is being processed to an oil containing 0.5 pct S and the ash rejected from the hydrogen plant contains negligible S, the Claus unit of a SYNTHOIL plant processing 25,000 tons of coal per day will produce approximately 5,500 gph of water. In addition to H_2S, SO_2 and S, the water may contain other sulfur compounds as contaminants (10). Furthermore, impurities in the feed to the Claus plant may give rise to other contaminants in the effluent (11).

CONCLUSIONS

Aside from the maintenance discharges, there will be six aqueous effluents from a commercial SYNTHOIL plant. A review of these effluents shows gaps in knowledge which must be filled in order to design treatment facilities for the effluents. Several of these effluents, however, are not yet available. The analysis of a sour water effluent, obtained from a 1/2 TPD SYNTHOIL unit, is presented.

REFERENCES

1. Akhtar, S., et. al. SYNTHOIL Process for Converting Coal to Nonpolluting Fuel Oil. Energy Communications, 1, No. 1, pp. 21-36 (1975).

2. Akhtar, S., et. al. The SYNTHOIL Process - Material Balance and Thermal Efficiency. Sixtyseventh Annual AIChE Meeting, Paper No. 35b, Wash., D.C., Dec. 1974.

3. Sternberg, H. W., et. al. SYNTHOIL Process and Product Analysis. ACS Symp. Ser. No. 20: Hydrocracking and Hydrotreating, pp. 111-112 (1975).

4. Processes, Procedures, and Methods to Control Pollution From Mining Activities. EPA-430/9-73-011. Supt. of Documents, U.S. Government Printing Office, Wash., D.C. 20402, 1973.

5. Acid Mine Drainage in Appalachia. Appalachian Regional Commission, 1666 Connecticut Ave., Wash., D.C. 20235, 1969.

6. Brant, R. A. and E. Q. Moullon. Acid Mine Drainage Manual, Bull. No. 179, Engineering Experiment Sta., College of Engineering, The Ohio State University, Columbus, Ohio, 1960.

7. Coal for Energy Self-Sufficiency. Environ. Sci. & Tech. 10, No. 13, pp. 1200-1202 (1976).

8. Akers, D. J., Jr. and W. F. Lawrence. Acid Mine Drainage Control Methods, Soc. of Mining Engineers of AIME Meeting, Rept. No. 86, Chicago, Ill., 1973.

9. Standard Methods for the Examination of Water and Waste Water. Prepared and published jointly by American Public Health Assn., American Waterworks Assns. and Water Pollution Control Federation, 143rd Ed., 1975.

10. Meisen, A. and H. A. Bennett. Consider all Claus Reactions. Hydrocarbon Proc., 53, No. 11, pp. 171-174, (1974).

11. Foar, B. G. Impure Feeds Cause Claus Plant Problems. Hydrocarbon Proc., 53, No. 7, pp. 129-132, (1974).

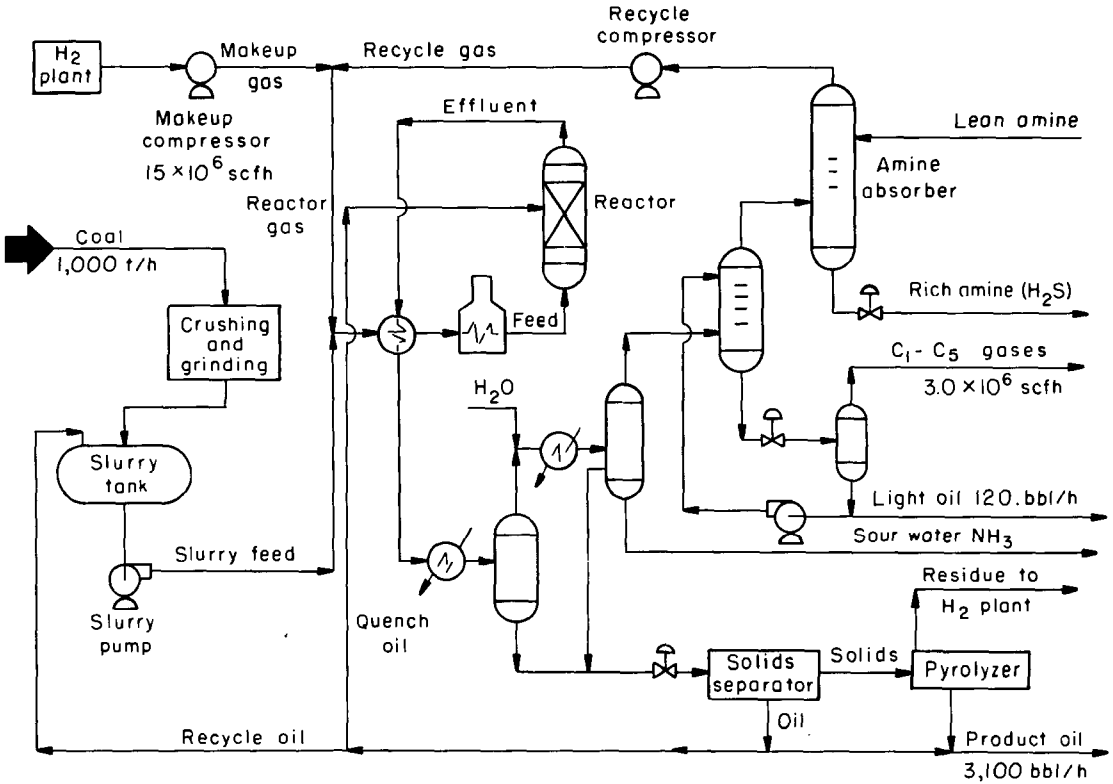

Figure 1. Flow diagram for a future commercial SYNTHOIL plant

L-14647