ECONOMICS OF PRODUCING AMMONIA FROM COAL BY PRESSURIZED ENTRAINED AND KOPPERS-TOTZEK GASIFICATION

William C. Morel and Yong Jai Yim[1]

U.S. Department of Energy
Process Evaluation Office
P.O. Box 863, Morgantown, WV 26505

The demand for fertilizer will steadily increase as the world population continues to grow at a rapid rate. Almost all nitrogen fertilizer is derived from ammonia. Natural gas is the raw material used to produce almost all the ammonia in the United States, but its availability for industrial use will decrease significantly in the future. Domestic consumption of natural gas will have top priority especially during the winter months. By 1990 the present administrations plans to phase out natural gas for industrial use. Therefore, a substitute raw material for ammonia production will be needed to supplement and eventually replace natural gas. Coal, our richest fossil energy resource, will make a strong bid to replace natural gas.

An economic evaluation of ammonia production from coal-derived hydrogen and air-derived nitrogen, based on a 1,000-ton-per-day capacity, is presented. Two coal entrained gasification systems for producing the hydrogen requirement are compared--one that operates at 30 atmospheres,[2] and the other, Koppers-Totzek, a commercially available system, that operates at a slightly higher than atmospheric pressure. Two different coals--Illinois No. 6 and Montana subbituminous--were considered for each system. The estimates are based on January 1977 cost indexes. Average selling prices of the ammonia were determined by using discounted cash flow (DCF) rates of 12, 15, 20 percent at various coal costs. No inflation factors are included during the life of the plant. Pollution abatement considerations have been incorporated. Some of the economic and technical details are included for the two systems.

ENTRAINED GASIFICATION AT 30 ATMOSPHERES

In the system, hydrogen required in the ammonia synthesis with nitrogen is prepared from synthesis gas produced by coal entrained gasification at 30 atmospheres. (1) (2) Figure 1, a flow diagram of the process, includes the following steps:

1. Coal preparation, which includes crushing, screening, and sizing of the run-of-mine coal to 70 percent through 200-mesh.
2. Entrained oxygen-coal gasification at 30 atmospheres with a 2,200° F outlet temperature. The synthesis gas is cooled to 750° F by water injection.
3. A dust removal unit removes entrained dust from the synthesis gas with cyclone separators followed by electrostatic precipitators for residual dust removal.
4. First stage shift conversion of the clean synthesis gas to a H_2:CO ratio of 2.3:1 in the presence of a sulfur-resistant catalyst. Part of the 50 psig saturated steam required in the purification unit is produced in the first heat recovery system.
5. First stage purification unit utilizes a hot potassium carbonate solution to reduce the CO_2 content to 2.0 percent and remove essentially all of the H_2S and COS. (3) Char towers are provided for removal of residual sulfur compounds.
6. Second stage shift conversion unit increases the H_2:CO ratio of the synthesis gas to 281.5:1 in the presence of a low-temperature catalyst. Additional 50 psig saturated steam is produced in the second waste heat recovery unit.
7. The CO_2 content of the shifted gas is reduced to 0.1 percent in the second purification unit which is similar to the first stage purification unit.
8. The remaining carbon oxides are converted to methane in the presence of a nickel catalyst. The product gas is cooled to 100° F and then mixed with sufficient

[1]Mr. Yim has resigned from the Department of Energy, and is located with Bechtel Corporation, 50 Beale Street, San Francisco, CA 94119.

[2]Based on U.S. Bureau of Mines research in the 1950's with full commercial development incomplete.

nitrogen from the oxygen plant to yield a synthesis gas having a $H_2:N_2$ ratio of 3:1 which is compressed to 2,000 psig.

9. The makeup gas mixes with cooled recycle gas and is then cooled to 0° F in a refrigeration-type condenser to reduce the NH_3 content to 1.5 percent. The condensed ammonia removes the last traces of water.

10. Eighty-five percent of the gas stream is heated to 706° F by product gas in a heat exchanger located below the catalyst bed prior to entering the catalyst bed. The remaining 15 percent is divided into three quench streams for control of catalyst temperature.

11. The product gas is cooled to 47° F in a series of heat exchangers. The gas stream is separated from the condensed ammonia, recompressed to 2,000 psig, and then recycled to mix with the makeup stream.

12. A small portion of the recycle stream is purged from the system to prevent buildup of methane. To increase the ammonia yield, the purge stream is cooled to -12° F before being vented.

13. The liquid ammonia product is cooled to -12° F, and then the pressure is reduced to 200 psig to remove the dissolved gases. The product is stored in low temperature atmospheric pressure storage tanks.

It is assumed that 15 percent [4] of the total H_2 and N_2 entering the converter is synthesized to ammonia. The design of the ammonia synthesis vessels was based on a gas space of 20,000 scf synthesis gas/ft^3 catalyst/hr. The thermal efficiency of the overall plant is 31.4 percent, based on gross heating values in Btu per pound of 10,700, 9,800 and 3,990 for coal, ammonia, and sulfur, respectively.

KOPPERS-TOTZEK ENTRAINED GASIFICATION

Hydrogen required in this system is prepared from synthesis gas produced by coal entrained gasification in Koppers-Totzek units which operate at 0.5 atmosphere. [5] [6] Figure 2 is a flow diagram of the process and includes the following steps:

1. Coal preparation is the same type of unit described in the entrained gasification system at 30 atmospheres.

2. Entrained oxygen-coal gasification at 0.5 atmosphere with a 2,732° F outlet temperature. The synthesis gas is cooled to 2,100° F by water injection. Part of the 800 psig steam used in the steam turbines is produced in the heat recovery unit.

3. A dust removal unit removed the entrained ash and unburned carbon with fixed-orifice washers followed by adjustable orifice washers for removal of fines. The dedusted gas is then compressed to 355 psig.

The remaining steps are the same as those for the other system.

CAPITAL INVESTMENT

The total investment is estimated to be $196 million for the entrained gasification system operating at 30 atmospheres of $49.5 million lower than the investment for the Koppers-Totzek gasification system, using an Illinois No. 6 coal. Using a Montana subbituminous coal, the total investment is reduced 12 percent to $173 million, and 9 percent to $223 million for the pressurized entrained and Koppers-Totzek systems respectively.

Table 1 is a capital requirement comparison of the two systems, and figure 3 shows the distribution of capital requirement for major processes. Detailed cost summaries of the major processing units are not included, but the costs of the individual units are listed. General facilities include administrative buildings, shops, warehouses, railroad spurs, rolling stock, roads, waste water treatment, and fences. The costs of steam and power distribution, cooling water towers, plant and instrument air, fire protection, and sanitary water are included in plant utilities.

OPERATING COST

Table 2 presents the estimated operating cost comparison for the two entrained gasification systems. An assumed 90-percent operating factor allows 35 days for downtime, two 10-day shutdowns for equipment inspection and maintenance and 15 days for unscheduled operational interruptions. With labor at $7.50 per hour, payroll overhead at 35 percent of payroll, and depreciation at 5 percent of the subtotal for depreciation, allowing credit for sulfur recovered at $40 per ton, and with the cost of coal as a variable, the following operating costs are derived:

Annual operating cost, dollars per ton of ammonia					
Cost of coal, per ton	Illinois No. 6 coal		Cost of coal, per ton	Montana subbituminous	
	Entrained at 30 atm.	Koppers-Totzek		Entrained at 30 atm.	Koppers-Totzek
$17	$146.97	$173.41	$7	$113.21	$138.04
20	155.96	182.91	9	120.74	145.72
23	164.95	192.40	11	128.27	153.39

Based on a 330-day operating year for the plant and allowing credit for the sulfur produced, with coal costs and discounted cash flow rates as parameters, the average selling price of the ammonia product per ton for the two systems is shown in the following table: (These are also plotted on figure 4.)

Ammonia selling price, per ton, Illinois No. 6 coal						
Cost of coal, per ton	12-percent DCF		15-percent DCF		20-percent DCF	
	Entrained at 30 Atm.	Koppers-Totzek	Entrained at 30 Atm.	Koppers-Totzek	Entrained at 30 Atm.	Koppers-Totzek
$17	$249.46	$300.37	$284.54	$344.15	$349.53	$425.16
20	258.45	309.87	292.53	353.64	358.51	434.65
23	267.74	319.37	302.51	363.14	367.50	444.15

Ammonia selling price, per ton, Montana subbituminous coal						
Cost of coal, per ton	12-percent DCF		15-percent DCF		20-percent DCF	
	Entrained at 30 Atm.	Koppers-Totzek	Entrained at 30 Atm.	Koppers-Totzek	Entrained at 30 Atm.	Koppers-Totzek
$7	$201.62	$252.27	$232.27	$291.52	$289.03	$364.72
9	209.16	259.69	239.80	299.20	296.56	372.39
11	216.69	267.36	247.33	306.87	304.10	380.07

The DCF computer program takes into account the capital expenditure prior to startup so that interest during construction is deleted from the capital requirement.

UNIT COST SUMMARY

The selling price used to determine the high-cost elements in the process was based on a 15-percent DCF for a 20-year life, with coal at $20 for the Illinois No. 6 and $9 for the Montana subbituminous. A breakdown of the cost elements for the two systems is shown in table 3 and plotted in figure 5.

SUMMARY OF COMPARISON

As shown in table 1, the total investment for the pressurized entrained gasification system, using Illinois No. 6 coal, is $196 million, or about 80 percent of the Koppers-Totzek investment. About 45 percent of the difference is due to the additional compressor investment required for processing the raw gas product leaving the gasification unit at essentially atmospheric conditions. The Koppers-Totzek system also requires a more complex and expensive gasification, an extra heat

recovery unit, and a wet dust removal system that is more expensive than the dry system used in the pressurized system. The capital investment for the pressurized entrained gasification system is reduced about 12 percent when a Montana subbituminous coal is used. About 70 percent of the reduction is due to the elimination of the flue gas processing unit. Differences in capital costs for the two systems are shown in figure 3.

The operating cost for the pressurized entrained gasification system using Illinois No. 6 coal is $48.5 million, or about 85 percent of the Koppers-Totzek cost, as shown in table 2. Increases in maintenance, overhead, and indirect and fixed costs, which are directly related to the capital investment, represent the main difference. By substituting a Montana subbituminous coal, the operating cost of the pressurized system is reduced about 25 percent. The cheaper western coal accounts for about 75 percent of the reduction.

Over the 12 to 20 percent DCF range at varying coal prices ($17 to 23 per ton) for Illinois No. 6 coal, the selling price for the ammonia from the pressurized entrained gasification system is $249.50 to $367.50 per ton or $51 to $77 per ton less than from the Koppers-Totzek system. This represents about a 20-percent decrease. When a Montana subbituminous coal is used in place of Illinois No. 6 coal, in the pressurized system, the selling price is also reduced about 20 percent. About the same percent reduction in selling price is obtained by substituting western coal in the Koppers-Totzek system.

CONCLUSION

Results of this study show that the pressurized entrained gasification system is more economical than the Koppers-Totzek system for production of ammonia from coal. The selling price of the ammonia can be reduced about 20 percent by substituting a western subbituminous coal for an eastern bituminous coal for both of the systems. Although the selling price is $20 to $100 per ton higher than the current price of ammonia at the lowest percent DCF, a substitute for natural gas, presently used as the raw material, will be required in the near future as gas reserves are depleted. Further research on these coal gasification processes will be required to reduce the manufacturing cost of the ammonia product. Various other processes such as the Lurgi, Winkler, and Texaco gasification systems should be considered as alternatives.

TABLE 1. - Capital requirements: Comparison of pressurized entrained gasification system with Koppers-Totzek system ($1,000)

Item	Pressurized entrained system		Koppers-Totzek system		Difference	
					PE-KT	PE-KT
	Illinois No. 6 coal	Montana subbituminous coal	Illinois No. 6 coal	Montana subbituminous coal	Illinois No. 6 coal	Montana subbituminous coal
Coal preparation.....	4,224	4,970	4,316	4,591	-92	+379
Gasification.....	3,455	3,672	4,735	4,519	-1,280	-847
Heat recovery No. 1.....	-	-	1,466	1,317	-1,466	-1,317
Dust removal.....	623	710	1,698	2,084	-1,075	-1,374
Compression No. 1.....	-	-	22,080	23,300	-22,080	-23,300
Shift conversion No. 1...	1,287	1,473	1,305	975	-18	+498
Heat recovery No. 2.....	2,713	2,691	7,001	9,329	-4,288	-6,638
Purification No. 1.....	11,919	12,967	13,949	15,071	-2,030	-2,104
Shift conversion No. 2...	735	735	688	729	+47	+6
Heat recovery No. 3.....	1,186	1,186	592	592	+594	+594
Purification No. 2.....	5,143	5,143	4,293	4,293	+850	+850
Methanation.....	1,467	1,467	1,438	1,438	+29	+29
Compression No. 2.....	15,625	15,625	16,224	16,224	-599	-599
Ammonia synthesis.....	33,656	33,656	33,656	33,656	0	0
Flue gas processing.....	16,352	-	18,350	-	-1,998	-
Sulfur recovery plant....	900	560	900	650	0	-90
Oxygen plant.....	11,170	11,946	12,000	12,200	-830	-254
Steam and power plant....	19,700	19,850	19,809	19,979	-109	-129
Plant facilities.....	9,762	8,749	12,338	11,322	-2,576	-2,573
Plant utilities.....	13,992	12,540	16,450	16,227	-2,458	-3,687
Total construction..	153,909	137,940	193,288	178,496	-39,379	-40,556
Initial catalyst requirement.....	1,002	1,038	802	780	+200	+258
Total plant cost....	154,911	138,978	194,090	179,276	-39,179	-40,298
Interest during construction.....	23,237	20,847	29,114	26,891	-5,877	-6,044
Subtotal for depreciation.....	178,148	159,825	223,204	206,167	-45,056	-46,342
Working capital.....	17,815	12,786	22,320	16,494	-4,505	-3,708
Total investment....	195,963	172,611	245,524	222,661	-49,561	-50,050

TABLE 2. - Annual operating cost: Comparison of pressurized entrained gasification system with Koppers-Totzek system ($1,000)

Cost item	Pressurized entrained system		Koppers-Totzek system		Difference	
					PE-KT	PE-KT
	Illinois No. 6 coal	Montana subbituminous coal	Illinois No. 6 coal	Montana subbituminous coal	Illinois No. 6 coal	Montana subbituminous coal
Direct cost:						
Coal[1]	16,807	8,701	17,759	8,865	-952	-164
Raw water	314	313	570	784	-256	-471
Catalyst and chemicals	949	569	953	463	-4	+106
Methane	703	-	790	-	-87	-
Subtotal	18,773	9,583	20,072	10,112	-1,299	-529
Direct labor	1,248	1,117	1,380	1,248	-132	-131
Direct labor supervision	187	168	207	187	-20	-19
Subtotal	1,435	1,285	1,587	1,435	-152	-150
Maintenance labor	2,880	2,574	3,600	3,312	-720	-738
Maintenance labor supervision	576	515	720	662	-144	-147
Maintenance material and contracts	4,320	3,861	5,400	4,968	-1,080	-1,107
Subtotal	7,776	6,950	9,720	8,942	-1,944	-1,992
Payroll overhead	1,468	1,312	1,772	1,623	-304	-311
Operating supplies	1,555	1,390	1,944	1,789	-389	-399
Total direct cost	31,007	20,520	35,095	23,901	-4,088	-3,381
Indirect cost	5,383	4,812	6,625	6,083	-1,242	-1,271
Fixed cost:						
Taxes and insurance	4,647	4,169	5,823	5,378	-1,176	-1,209
Depreciation	8,908	7,991	11,160	10,309	-2,252	-2,318
Total, before credit	49,945	37,492	58,703	45,671	-8,758	-8,179
Sulfur credit	-1,444	-133	-1,447	-117	+3	-16
Total, after credit	48,501	37,359	57,256	45,554	-8,755	-8,195

[1]Illinois No. 6 coal @ $17/ton; Montana subbituminous coal @ $7/ton.

TABLE 3. - Unit cost comparison

Unit	Cost per ton of product at 15 percent DCF			
	Pressurized entrained system		Koppers-Totzek system	
	Illinois No. 6 coal	Montana subbituminous coal	Illinois No. 6 coal	Montana subbituminous coal
Coal preparation	$13.26	$13.21	$12.55	$13.10
Gasification	77.83	61.11	71.28	54.87
Dust removal	1.01	1.09	4.06	5.23
Compression No. 1	-	-	43.03	42.46
Shift conversion No. 1	7.46	7.95	26.00	24.94
Purification No. 1	29.34	28.96	33.70	32.51
Shift conversion No. 2	11.10	10.08	10.67	9.81
Purification No. 2	11.92	10.90	9.29	10.08
Methanation	3.15	3.05	3.13	3.36
Compression No. 2	48.07	44.02	44.75	42.72
Ammonia synthesis	59.70	57.43	59.37	57.60
Flue gas processing	30.15	-	35.05	-
Sulfur recovery	.54	2.00	.76	2.52
Total	293.53	239.80	353.64	299.20

NOTE:--Coal cost, dollars per ton--Illinois No. 6 is $20 and Montana subbituminous is $9.

REFERENCES

1. Intra-Department Report No. 78-2, "An Economic Evaluation of Ammonia Production via Synthesis of Nitrogen and Hydrogen Using an Oxygen-Coal Pressurized Entrained Gasification System For Hydrogen Production, 1,000-Ton-Per-Day Plant, Illinois No.6 Coal." Process Evaluation Office, U.S. Department of Energy, Morgantown, W. Va., November 1977.

2. Intra-Department Report No. 78-8, "An Economic Evaluation of Ammonia Production via Synthesis of Nitrogen and Hydrogen Using and Oxygen-Coal Pressurized Entrained Gasification System For Hydrogen Production, 1,000-Ton-Per-Day Plant, Montana Subbituminous Coal," Process Evaluation Office, U.S. Department of Energy, Morgantown, W. Va., April, 1978.

3. Wellman, P., and S. Katell. U.S. Bureau of Mines Information Circular 8366, "Hot Carbonate Purification Computer Program," March 1968.

4. Bresler, Sidney A., and G. Russel James. "Questions and Answers on Today's Ammonia Plants," Chem. Eng., June 21, 1965, p. 116.

5. Intra-Department Report No. 78-3, "An Economic Evaluation of Ammonia Production via Koppers-Totzek Coal Gasification System for Hydrogen Production (Illinois No. 6 Coal), 1,000-Ton-Per-Day Plant," Process Evaluation Office, U.S. Department of Energy, Morgantown, W. Va., December 1977.

6. Intra-Department Report No. 78-7, "An Economic Evaluation of Ammonia Production via Koppers-Totzek Coal Gasification System for Hydrogen Production (Montana Subbituminous Coal), 1,000-Ton-Per-Day Plant," Process Evaluation Office, U.S. Department of Energy, Morgantown, W. Va., April 1978.

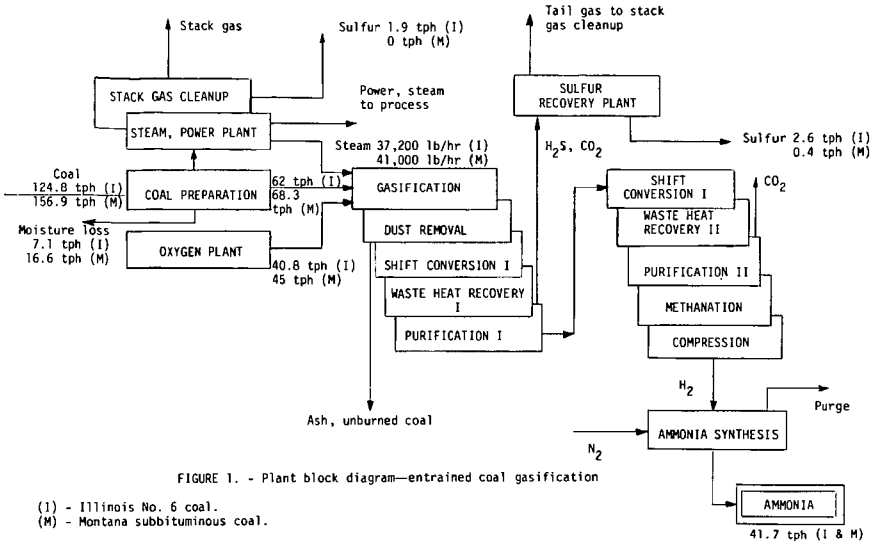

FIGURE 1. - Plant block diagram—entrained coal gasification

(I) - Illinois No. 6 coal.
(M) - Montana subbituminous coal.

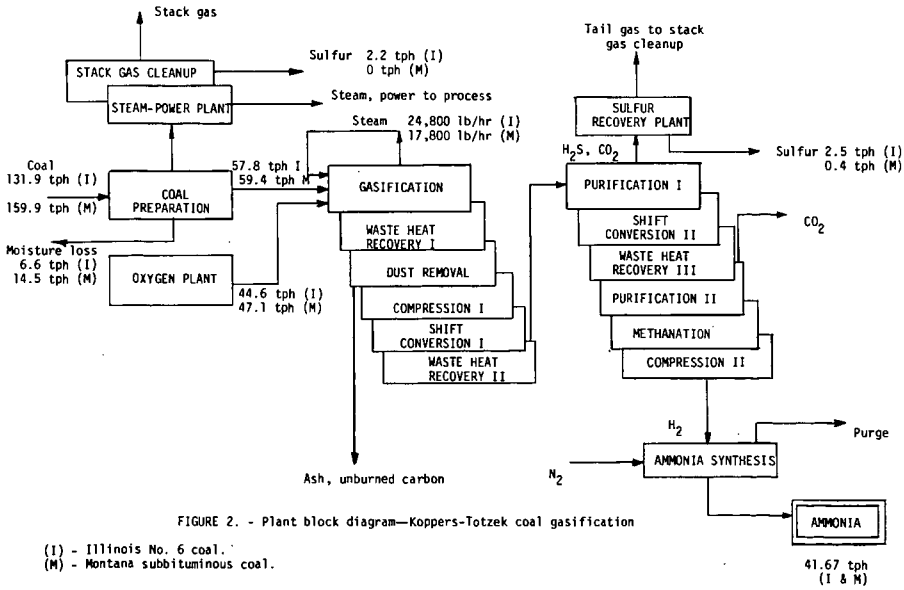

FIGURE 2. - Plant block diagram—Koppers-Totzek coal gasification

(I) - Illinois No. 6 coal.
(M) - Montana subbituminous coal.

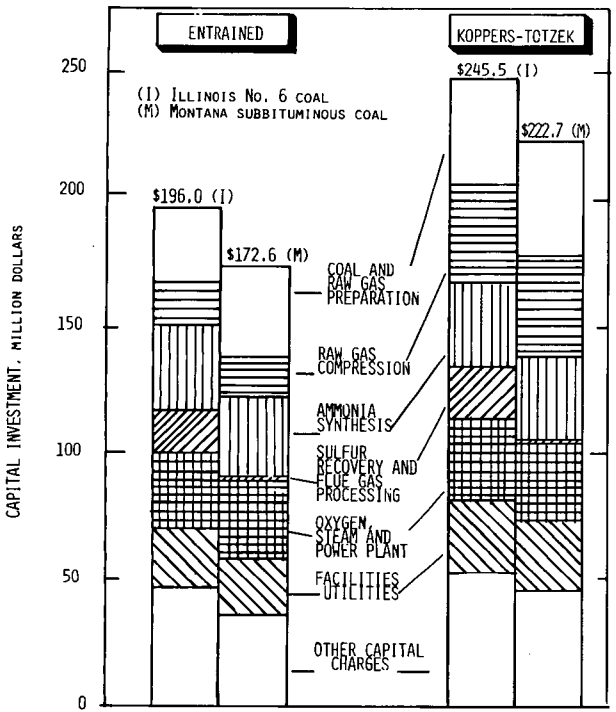

FIGURE 3. - CAPITAL INVESTMENT REQUIREMENTS FOR TWO PROCESSES AND THEIR DISTRIBUTION

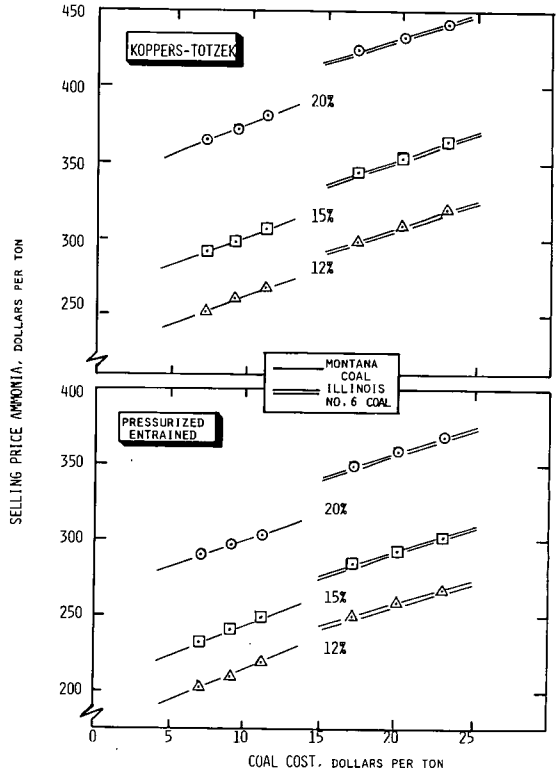

FIGURE 4. - SELLING PRICE OF AMMONIA AT DIFFERENT COAL PRICES WITH DCF RATE OF RETURN AS A PARAMETER

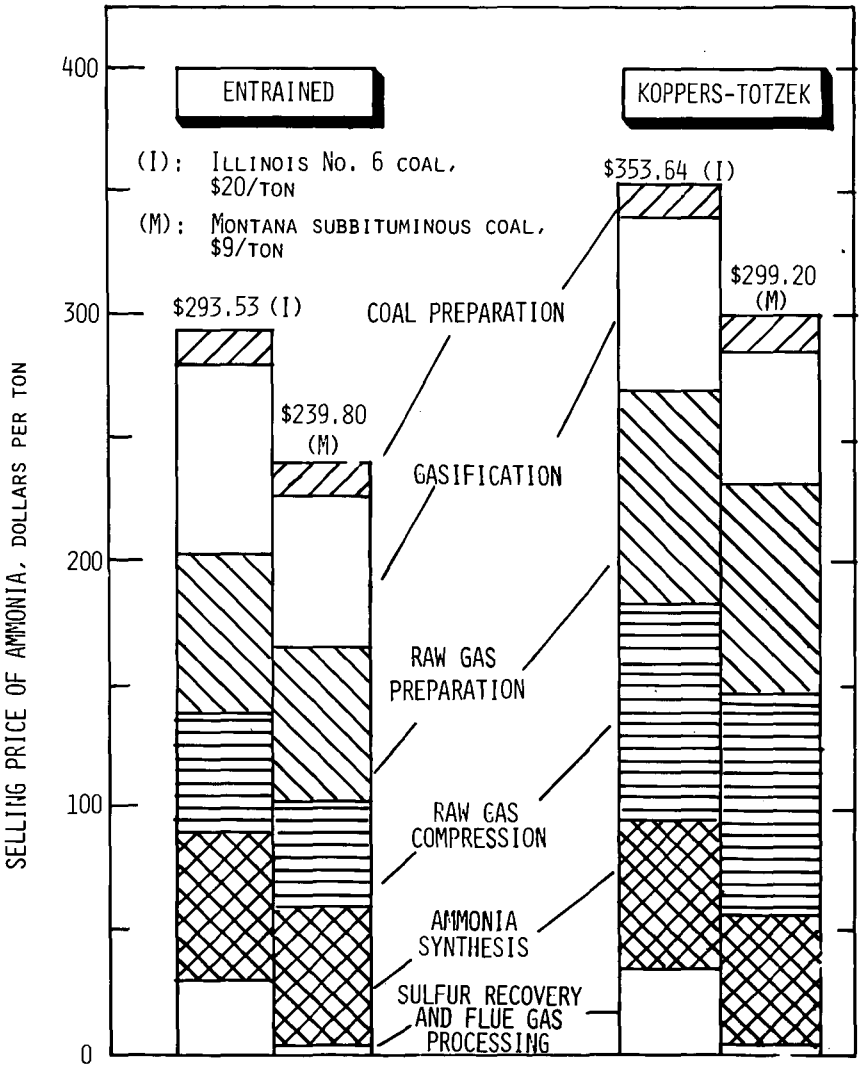

FIGURE 5. - SELLING PRICE OF AMMONIA AND ITS DISTRIBUTION BASED ON UNIT COST PROCEDURE AT 15 PERCENT DCF