The Development and Application of a Non-Dispersive X-ray Sulfur Analyzer with Mechanisms for Non-linear Approximation and for All Other Matrix Effect Corrections

Akiyoshi Masuko*, Fumio Imai* and Toyotsugu Yamano**

*Nippon Oil Company Ltd., Central Technical Research Laboratory
8, Chidoricho, Nakaku, Yokohama 231, Japan
**Rigaku Corporation, Osaka
14-8, Akaouji, Takatsuki 569, Japan

Introduction

Precise determination of sulfur contents in fuel oils has become more important for quality control by refineries and quality monitoring by enviromental agencies.

Of the many test methods used for determining sulfur contents in fuel oils, the bomb method(ASTM D 129) is considered to be the world-wide standard. However, this method requires several hours running time, and the results can vary greatly depending upon the skill of the analyst running the test.

A rapid and exact method is required to routinely analyze sulfur contents in fuel oils, and the method should be easy to operate and to maintain. To meet these requirements, non-dispersive x-ray sulfur analyzers which utilize either a radioisotope such as 55-Fe or a small x-ray tube as the fluorescent x-ray generator have been developed by many manufacturers. This kind of analyzer is reportedly superior in terms of speed, accuracy, economy and ease of operation and maintenance as compared to a combustion method such as the bomb method(1). However, the accuracy of the results in the x-ray method cannot be better than that of the standards with which the unknowns are compared. Also, it was found during our research that fairly large errors can arise from the following items. (It should be noted, however, that these errors, though large, rarely exceed the allowable errors cited in ASTM methods):

(i) Peak overlapping between the S-KX spectrum and Cl-KX spectrum,
(ii) The use of a linear approximation for the working curve, and
(iii) Differences in composition between the standards and the unknowns, especially in the carbon-hydrogen weight ratio(C/H) of the hydrocarbon portion of these oils.

With respect to item(i), most manufacturers have already solved the problem. The most straightforward way of doing this is by inserting a sulfur-containing film between the sample and the x-ray detector, since the Cl-KX spectrum is filtered out by such film. However, other method have also been successful.

The error due to item(ii), can be reduced by narrowing the interpolation range of the standards to be used for the calibration. In fact, many laboratories where sulfur contents of the samples to be analyzed are limited to a certain range can apply the linear approximation without noticeable loss of accuracy. However, in analyzing samples which spread over a wide range of sulfur contents, recalibrations should be made several times a day so that the working range of the approximation is small enough to insure the accuracy desired. The recalibration itself is very troublesome for analysts in routine analysis.

With respect to item(iii), the error can be corrected either theoretically or experimentally if the compositions of both the standards and the samples are known. However, it is tedious to determine these compositions.

To correct these errors automatically, a new type of analyzer was developed. In this paper, the improvements in this analyzer compared to the prototype(Rigaku Sulfur-X) will be reported. In addition to this, the results of tests on a variety of samples will also be described.

Instrument

The non-dispersive x-ray sulfur analyzer discussed in this paper consists of the prototype plus additional components as described below. Figure 1 is a schematic diagram of the apparatus with the broken lines denoting newly installed components, i.e. '9', '10', '13' and '16'. Component '10' calculates the ratio between the S-KX spectrum intensity('8') and the scattered radiation intensity('9'). Since the factors influencing the absolute intensity of the S-KX spectrum(e.g., differences in composition, instrumental variables, and atmospheric changes) also influence the scattered radiation intensity to the same degree, using the ratio instead of the absolute intensity corrects for these factors.

Block '17' calculates the values of the constants in the calibration equation shown below(Eq.1).

$$S = a I^2 + b I + c \qquad 1)$$

where S is the sulfur content, I is the x-ray intensity ratio between the S-KX spectrum and the scattered radiation, and a, b and c are constants. To determine these constants, three standard samples whose sulfur contents are exactly known are sequentially measured with the analyzer set on mode 'C'(see Fig.1). These constants, once determined and stored in the memory of the calculator, can be used for about one year without loss of accuracy, since the ratio calculator '10' seems to be also effective in correcting the long term drift of the analyzer.

Preliminary Tests

To compare the performance of the modified analyzer to that of the prototype, analyses were made on prepared samples. The samples consisted of white oil plus di-butyl di-sulfide(DBDS). Di-butyl di-sulfide has recently been officially certified by the Japanese government as the sulfur compound for x-ray calibration purposes and is now widely used in Japan.

As can be seen in Fig.2, the relationship between the content and the intensity is not linear. Thus, if the working curve is approximated with a straight line, for example, ranging from 0 wt% to 6 wt%, the maximum error reaches 0.31 wt% at the mid point of the curve, as illustrated in Fig.3(b). It was recognized that the relationship shown in Fig.2 can be more accurately expressed by a quadratic equation rather than a linear equation. Thus, a quadratic approximation was set up using calibration standards containing 0, 3 and 6 wt% sulfur. The results shown in Fig.3(b) clearly indicate that the use of this quadratic approximation greatly reduced the difference between the measured value and actual value of the sulfur content. The maximum error observed was 0.01 wt%.

As shown in Fig.4(a), fairly large errors were observed when samples of high C/H were analyzed by using calibration standards of low C/H. In this case, the standards were prepared from decalin(C/H=6.7) plus DBDS, while the unknowns were prepared from tetralin(C/H=10.0) plus DBDS.

It was previously reported by one of the authors(2) that this error could be corrected by using the follwing empirical equation,

$$\Delta S = -0.013\, S\, (C/H_{std} - C/H_{unkn}) \qquad 2)$$

where S is the observed sulfur content and ΔS the value to be added to the observed sulfur content. In the above-referenced study, the factor 0.013 was determined experimentally by using the prototype x-ray analyzer. To use Eq.2, one must know C/H values for both the standards and the unknowns. An alternative expression can also be obtained by using the specific gravity ρ instead of C/H, since it was found that C/H is roughly related to ρ as follows:

$$C/H = 8.82\, \rho - 1.06 \qquad 3)$$

thus,

$$\Delta S = 0.115\, S\, \Delta\rho \qquad 4)$$

where $\Delta\rho = \rho_{std} - \rho_{unkn}$ 5)

It has been reported(3) that the error due to the C/H difference in the standards and the unknowns can be effectively eliminated by using the scattering intensity of the sample as an internal standard. In the modified analyzer, the effect of the compositional differences between the standards and the unknowns are automatically compensated by installing a scaler for the scattered radiation('9') and a ratio calculator ('10'). Figure 4(b) shows the results obtained by using the modified analyzer for testing the same combination of standards and unknowns tested on the prototype. Since the errors observed using the modified analyzer were much smaller than those observed using the prototype, we feel that the modified analyzer can be used in a wider range of applications than was previously possible.

The results illustrated in Fig.5(a) indicate that the magnitude of the effect due to the coexistence of chlorine is very small, and that the effect of the Cl-KX spectrum is adequately reduced by the filter. Without a filter, or other device for eliminating the Cl-KX spectrum, errors can be very large as seen in Fig.5(b).

Test Results

To examine practical usage of the analyzer, analyses were made on a variety of fuel oils whose characteristics are outlined in Table 1. Sulfur contents for these samples had been previously determined by the quartz tube method(JIS K 2541-1971) in several inter-laboratory tests. The standard samples for calibration were made from white oil plus DBDS. Sulfur contents of these standards were 0, 1.5 and 3.0 wt%. In this series of measurements, three 100 sec integrations were made for each sample, and the results were averaged. The results of the analyses are shown in Fig.6, where the horizontal axis indicates the sulfur content determined by the quartz tube method, and the vertical axis indicates the difference between the sulfur level determined by the x-ray method and that determined by the quartz tube method(in the case of fuels used in inter-laboratory tests) or that certified by NBS or JPI(in the case of standard reference materials).

It can be seen from Fig.6 that the errors are within ±0.01 wt% for most of the samples analyzed, and within ±0.02 wt% for all of the samples analyzed(ranging up to 3.3 wt% sulfur contents).

Since the observed errors are so small, we can conclude that standard samples prepared from white oil plus DBDS can be used for calibration without loss of accuracy, in spite of the fact that there are many differences in composition between the standards and the unknowns, such as C/H, quantity of ash, chlorine content,etc.

Conclusion

A non-dispersive x-ray sulfur analyzer which consists of the prototype "Rigaku Sulfur-X" plus additional mechanisms for correcting various matrix effects was developed.

Test results made on a variety of fuel oils indicated that the modified analyzer can accurately measure sulfur contents of fuel oils(within ±0.01 wt% of the actual value) by using calibration standards prepared from white oil plus di-butyl di-sulfide.

References

(1) G.Frechette, J.C.Herbert, T.P.Thinh and Y.A.Miron; Hydrocarbon Processing,vol.54, 109 (1975).
(2) A.Masuko; J. Japan Petrol. Inst., vol.20, 909 (1977),in Japanese.
(3) G. Andermann and J.W.Kemp; Anal. Chem., vol.30, 1306 (1958).

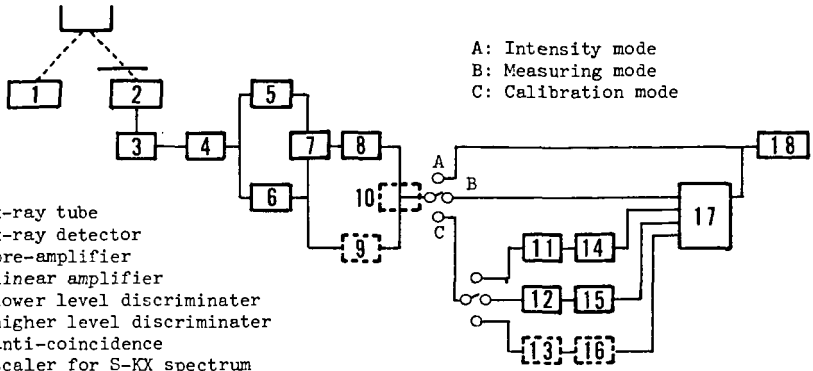

1. x-ray tube
2. x-ray detector
3. pre-amplifier
4. linear amplifier
5. lower level discriminater
6. higher level discriminater
7. anti-coincidence
8. scaler for S-KX spectrum
9. scaler for scattered radiation
10. ratio calculator
11. scaler for No.1 standard
12. scaler for No.2 standard
13. scaler for No.3 standard
14. sulfur content for No.1 std.(manual input)
15. sulfur content for No.2 std.(manual input)
16. sulfur content for No.3 std.(manual input)
17. calculator for working equation
18. indicator

Fig.1 Schematic diagram of the non-dispersive x-ray sulfur analyzer

Note: the blocks surrounded by solid lines are those of the prototype.

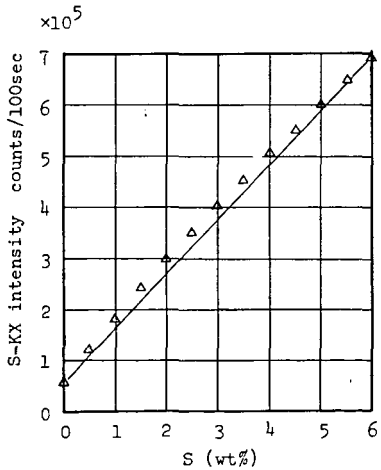

Fig.2 Relation between sulfur content and S-KX intensity

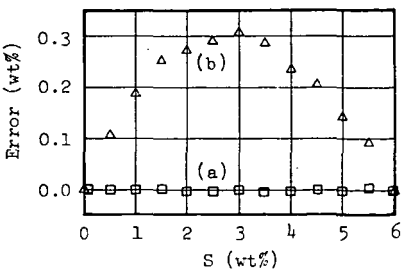

Fig.3 Comparison of linear approximation and quadratic approximation

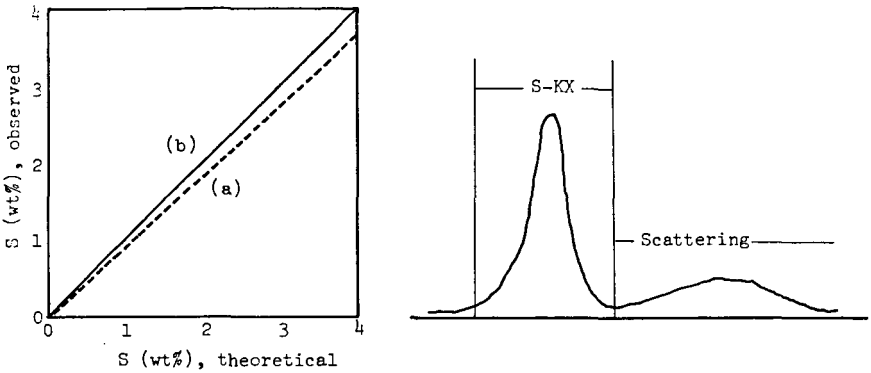

Fig.4 Comparison of absolute method(S-KX intensity) and ratio method(S-KX intensity/scattering intensity)

C/H of the standards: 6.7
C/H of the unknowns :10.0

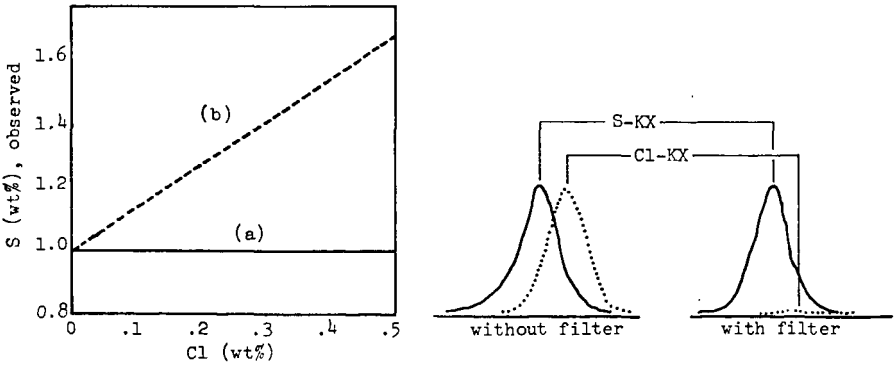

Fig.5 Error due to peak overlapping, and the effect of filtering

Sulfur contents in the samples used in the experiment were 1.0wt%

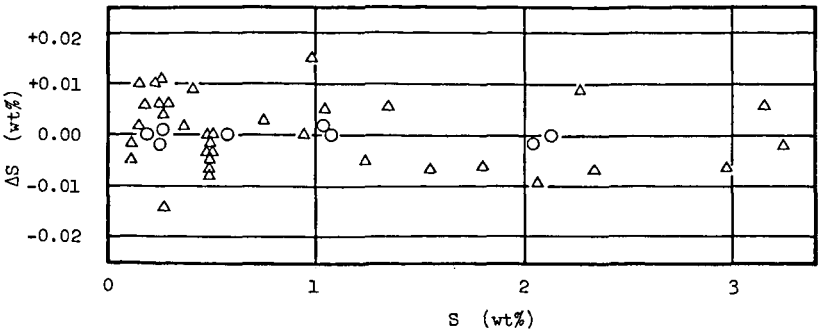

Fig.6 Analytical results for a variety of fuel oils

△: Samples which had been used and analyzed in inter-laboratory tests by quartz tube method(JIS K 2541-1971).
○: Standard reference materials(NBS and JPI).

Horizontal axis: Sulfur content either determined by quartz tube method or certified by NBS or JPI.
Vertical axis : The difference ΔS (wt%) given by following equations,

$$\Delta S = S_{quartz} - S_{x\text{-}ray}$$

$$\Delta S = S_{SRM} - S_{x\text{-}ray}$$

Table 1. Characteristics of the sample oils* analyzed

Term	Range
C/H (wt%/wt%)	6.0 - 8.5
Sulfur content (wt%)	0.1 - 3.4
Ash (wt%)	0.01 - 0.2
Pour point (°C)	-10 - +35
Viscosity,@50°C (cSt)	2.5 - 200
Specific gravity (15/4°C)	0.84 - 0.95
Chlorine content**(wt%)	0 - 0.5

* These samples had been analyzed previously in inter-laboratory tests.
** Chlorinated paraffins were added to some of the sample oils for the adjustment of Cl contents.