HYDROLIQUEFACTION OF AUSTRALIAN COALS

Norbert V.P. Kelvin

Australian Coal Industry Research Laboratories Limited,
North Ryde, N.S.W. 2113. Australia.

Introduction

Australia, like many other nations, faces an increasing demand for liquid transportation fuels with decreasing domestic crude oil production. Accordingly, efforts are now under way to investigate the liquefaction of Australian coals. Hydroliquefaction processes are considered to be likely candidates for initial commercial development because of the abundance of brown and high volatile black coals which are good hydroliquefaction feedstocks. Initial work by ACIRL indicates that a number of Australian coals can be hydrogenated to produce high liquid yields.

Batch Autoclave Screening Tests

Batch autoclave tests were done on several Australian coals ranging from low-volatile high rank to Victorian brown coals (sub lignites) (1-8). These were conducted in 4 litre stirred autoclaves in tetralin solvent under hydrogen pressure at the following conditions:

Total autoclave volume,	L	3.78
Coal charge,	g	500
Tetralin charge,	g	1500
Initial hydrogen pressure (cold),	MPa	8.3
Max. temperature	^{o}C	400
Hold time at 400°C,	h	4

The yields of toluene-soluble oils are plotted against coal composition and petrography in Figures 1, 2 and 3. As expected these data clearly show that coals with high reactive maceral contents, high hydrogen/carbon ratios and high volatile matter are likely to give the highest liquid yields.

Abundance and ease of mining of the highest liquid yielding coals as determined in the batch autoclave tests indicated the most suitable coals for further testing in ACIRL's continuous bench scale reactor unit.

Continuous Reactor

ACIRL's continuous reactor unit has been described in an ACIRL report (8). The flow diagram of the unit is shown in Figure 4. Coal-solvent slurry and hydrogen are fed into the unit which produces a cooled product slurry containing all the water and light oil which is then flash-distilled in 4 kg batches in separate glassware. High-pressure exit gases are vented at low pressure through meters and representative samples analysed by GC.

The distillation is carried out in stages to produce light oil, water, medium (atmospheric) distillate, vacuum distillate and a residue of high boilers plus all the unconverted coal solids. Recycle solvent is made by recombining the medium and vacuum distillates. For nearly all runs conducted so far, sufficient solvent has been produced to maintain solvent balance plus a net liquid yield.

The actual excess liquids produced end up as samples for further analysis and evaluation.

The conditions under which the continuous reactor operates are :

Slurry feed rate	0.5 - 3.0 kg/hr
Hydrogen feed rate	0 - 300 g/hr
Solvent:coal ratio	1.7 - 3.0:1
Pressure	10 - 21 MPa
Temperatures :	
- preheater	500°C max.
- stirred reactor	425°C max.
Preheater tube dimensions	6-20 m x 6 mm I.D. x 9.5 mm O.D.
Preheater volume	0.2 - 0.6 L
Stirred reactor liquid holdup	1.5 - 3.6 L

Results

Run conditions and yield data from a batch test and a series of continuous recycle runs on a typical coal selected for continuous tests are presented in Table 1. Analyses of this coal are given in Table 2.

These data indicate that hydrogenation of this coal under recycle solvent conditions will produce about 40% distillate liquids on dry ash-free coal.

Further work is being carried out now to improve these yields to around 50% or better. The configuration of the unit and equipment limitations (temperature, pressure, hydrogen compressor capacity, etc.) for the tests reported here are considered to be in need of upgrading to achieve the higher yields. Moreover, some operational problems are also considered to contribute to lower than desired yields. These problems are discussed below.

Operability

Apart from mechanical and electrical problems that have nothing to do with what goes through the system, the major problem areas are -

1. Large losses relative to the small scale of operation (mainly in distillation).
2. Difficulty in pumping thicker slurries than 2:1 solvent:coal ratio at this small scale.
3. Preheater blockage.
4. High-pressure slurry let-down valve wear.

Losses

Generally, material balances from feed to product slurry and gases over the high-pressure system are good, 97 - 103%. Distillation losses of the order of 5% on coal are usual and almost unavoidable at this small scale. These losses are believed to be caused mainly by evaporation of light hydrocarbons and water from collecting vessels and vaporisation and inadequate trapping of medium boiling materials during vacuum distillation. In addition, some pyrolysis occurs at the later stages (at 400 - 450°C) of vacuum distillation releasing gases which are not

easy to meter and analyse under vacuum conditions.

Slurry Pumping

We have found that our slurry circulating gear pumps can only handle slurries up to 35% solids loadings. On a larger scale 45% would be possible. At this scale the larger pumping and piping required would entail too much variable hold up of feed slurry to be able to obtain satisfactory material balances.

Preheater Blockages

Our preheater, a 20 metre length of 9.5 mm O.D. by 6.0 mm I.D. stainless steel tube wound into spirals, is heated in a cylindrical sand bath 270 mm diameter x 300 mm sand depth. We have found that preheater blockage can result from a number of factors including :

(i) temperatures above 460°C.
(ii) accidental pressure reduction so that too much solvent evaporates.
(iii) sudden surges of feed hydrogen which dry out the solvent.
(iv) stagnant slurry at above 380°C due to pumping stoppage.
(v) attempting to pump slurry through the preheater when its whole length is at 360 - 390°C, that is when the preheater is full of gelling slurry.

Slurry valve wear

Wear of high pressure slurry let-down valves has been a very serious problem. After discharging about 20 - 100 kg slurry from 21 MPa to atmospheric pressure through our slurry let-down valves these valves are unable to hold pressure satisfactorily. At our small scale, this problem can only be solved by using gas pressure equalisation to reduce the pressure drop across the slurry valves.

Acknowledgments

Financial support for this work was provided by the National Coal Research Advisory Committee. Permission by Mr. A.H. Hams, ACIRL's General Manager and Director of Research, to present this paper is gratefully acknowledged.

The assistance of J.F. Cudmore, R.E. Guyot, I.S. Fletcher, P.A. Bennett and B.P.K. Lim is also gratefully acknowledged.

References

1. ACIRL Ltd. (1975)
"Production of Synthetic Oil and Chemicals from Coal - Batch Autoclave Hydrogenation Studies - Part 1" by R.E. Guyot and J.F. Cudmore. Report P.R.75-6

2. ACIRL Ltd. (1975)
"Production of Synthetic Oil and Chemicals from Coal - Batch Autoclave Hydrogenation Studies - Part 2" by R.E. Guyot. Report P.R.75-14

3. ACIRL Ltd. (1976)
"Production of Synthetic Oil and Chemicals from Coal - Part 3 - Relationships between Coal Properties and Hydro-Liquefaction Potential" by R.E. Guyot. Report P.R.76-8

4. ACIRL Ltd. (1977)
"Production of Synthetic Oil and Chemicals from Coal - Part 4 - Relationships between Coal Properties and Liquefaction Potential" by R.E. Guyot. Report P.R.77-1

5. ACIRL Ltd. (1977)
"Production of Synthetic Oil and Chemicals from Coal - Part 5 - Relationships between Coal Properties and Liquefaction Potential"by R.E. Guyot. Report P.R.77-8

6. ACIRL Ltd. (1978)
"Influence of Coal Characteristics on the Yields and Properties of Hydrogenation Products" by R.E. Guyot. Report P.R.78-8

7. ACIRL Ltd. (1979)
"Relationship between Coal Properties and Liquefaction Potential" by R.E. Guyot. Report P.R.79-1

8. JOINT COAL BOARD and QUEENSLAND COAL BOARD
"Survey of Australian Black Coals of Conversion Potential"
Report November 1976

9. ACIRL Ltd. (1978)
"Oil and Chemicals from Coal - Construction and Commissioning of a 1 kg/hr Continuous Reactor Unit" by N.V.P. Kelvin. Report P.R.78-2

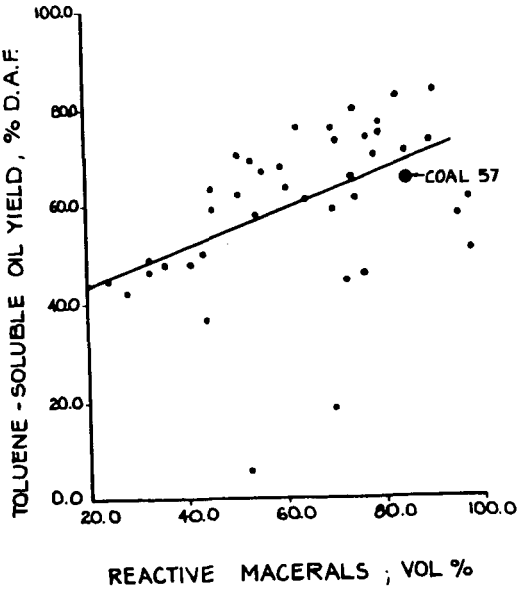

FIGURE 1 - BATCH AUTOCLAVE OIL YIELD VERSUS REACTIVE MACERALS

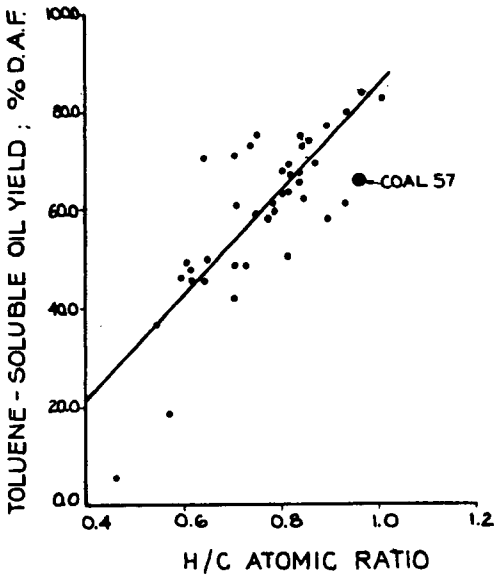

FIGURE 2 - BATCH AUTOCLAVE OIL YIELD VERSUS H/C ATOMIC RATIO

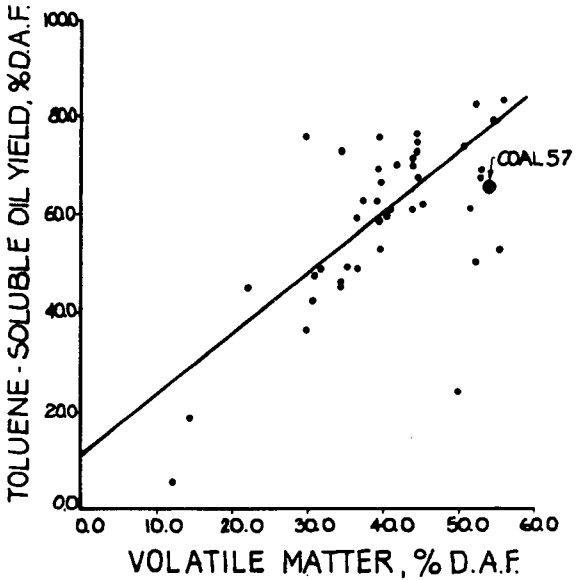

FIGURE 3 - BATCH AUTOCLAVE OIL YIELD VERSUS VOLATILE MATTER

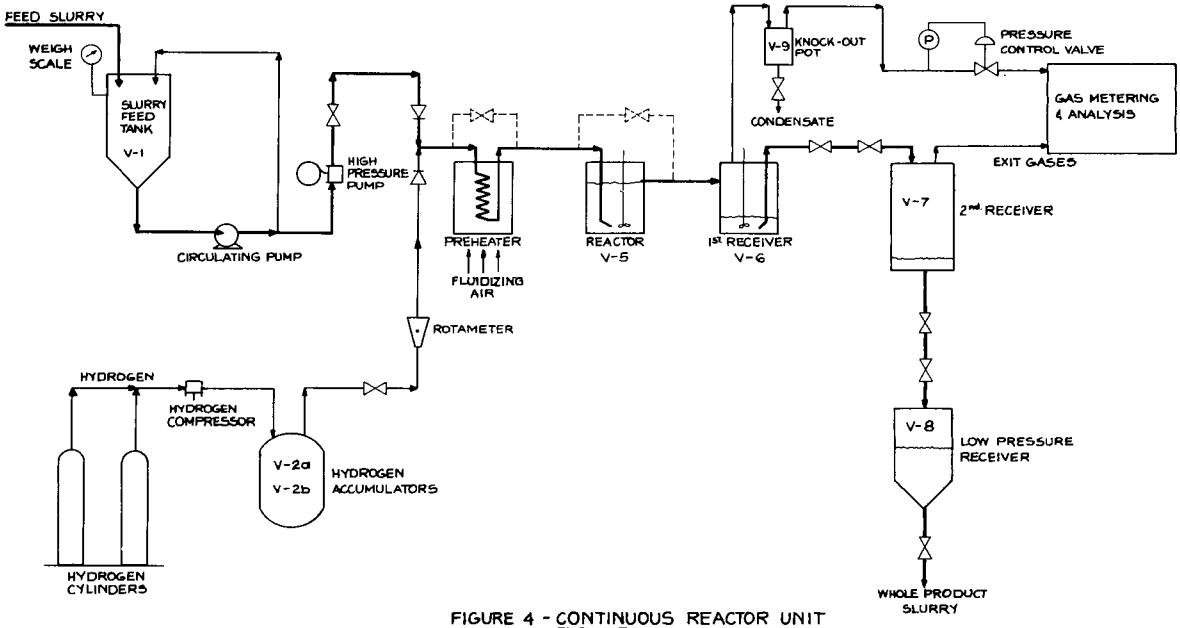

FIGURE 4 - CONTINUOUS REACTOR UNIT FLOW DIAGRAM

TABLE 1

Yield Data for Coal 57

Process Parameters	Batch Test	Continuous Reactor Runs			
		23	25	26A	26B
Run time, h	4	83	100	216	(216)
Solvent	(T)	(R)	(R)	(R)	(R)
Solvent:coal ratio	3	2	2	2	2
Red mud, % coal	0	3	3	3	3
Feed H_2, % d.a.f. coal	2.6	5.5	9.6	27	43
Pressure MPa	~19	21	21	21	21
Temperatures, °C					
- preheater	-	425	440	425	425
- reactor	400	425	425	400	400
Est.slurry hold time,h	4	2	3.2	4.2	4.2
Slurry feed rate,kg/h	static	1.0	1.0	0.5	1.0
Results					
Product recovery, % of feeds	~95	100	93	99	99
Toluene conversion, (% d.a.f.)	91	75	82	87	80
Total distillate oil yield, (% d.a.f.)	20	30.4	29.4	36.8	35.1
Distillation residue, (% d.a.f.)	54	61.3	47.9	41.8	54.2
Water & Gases, (% d.a.f)	26	8.2	9.7	16.2	8.4
Losses (% d.a.f.)	(N)	0.1	13.0	5.2	2.3
Est. residue pyrolysis oil yield, % d.a.f.	3	3.1	2.4	2.1	2.7
Total estimated oil yield, % d.a.f. (E)	23	33.5	38.3	41.5	39.0

Notes:
(T) Tetralin solvent
(R) Recycled distillate (ca. 200 - 600°C B.P.)
(N) Batch data normalised to 100%
(E) Sum of total distillate yield, 50% of losses and estimated pyrolysis oil.

TABLE 2

Analyses of Coal 57

Proximate	%
Moisture	2.0
Ash	18.3
Volatile Matter	42.2
Fixed carbon	37.5

Elemental	% d.a.f.
Carbon	78.7
Hydrogen	6.38
Nitrogen	1.25
Sulphur	0.63
Oxygen (by diff.)	13.0

Petrography	Vol. %
Vitrinite	67
Suberinite	15
Exinite	4
Inertinite	4
Mineral Matter	15

Forms of Sulphur	% d.a.f.
Pyritic	0.09
Sulphate	0.01
Organic	0.43

Mean maximum reflectance of vitrinite 0.54%