SULFUR REMOVAL FROM COAL CHAR USING " CONVERT-REMOVE" TECHNOLOGY

ANN BAUGH TIPTON

OCCIDENTAL RESEARCH CORPORATION,
P.O. BOX 19601,
IRVINE, CALIFORNIA 92713

BACKGROUND

The reactivity of the organic sulfur in coal and char continues to be the major challenge to finding an economical method to produce a compliance boiler fuel, i.e., to remove ninety percent of the sulfur from run-of-mine coal prior to combustion.

Two recent studies, one by Contos, Frankel and McCandless(1) and another by Attar and Dupuis(2), offer clues to what will be needed in an improved method to meet these goals for coal desulfurization. The study by Contos, et al., described the economic and technical strengths of existing processes for chemical coal cleaning. The study concludes, "Chemical Coal Cleaning Processes can remove as much as 95 to 99 percent of pyritic sulfur and up to about 40 percent of the organic sulfur from run-of-mine coal." The comparison of the major processes from this study is shown in Table 1.

Table 1

COMPARISON OF MAJOR CHEMICAL COAL CLEANING PROCESSES*

	Max. % Removal			Product Cost
Process	Pyrite		Organic S	$/Ton
Magnex	90		0	40.70
Syracuse	50-70		0	37.00
Meyers	90-95		0	43.40
Ledgemont	90-95		0	46.90
DOE	95		40	51.60
GE	-	75% Total	-	41.80
Battelle	95		25-50	55.90
JPL	90		70	46.00
IGT	95		85	65.80
KVB	95		40	47.50
Arco	95		"some"	46.00-58.00

* Ref. (1)

With the exception of IGT, all of the processes in Table 1 which remove organic sulfur rely on oxidizing agents. The evidence seems quite convincing that the most difficult to remove organic sulfur is not reactive to oxidizing agents. This, in turn, leads us to pursue reducing agents.

Recent research by Attar and Dupuis(2) offers evidence for the capability of reducing agents for organic sulfur removal. Attar et al. used strong reducing agents with catalyst at temperatures up to 400°C as a method to identify and quantify organic sulfur groups in coal. Attar et al. found that almost half of the organic sulfur in high sulfur bituminous coals did not react under their test conditions. Attar and Dupuis conclude, "An upper bound exists on the maximum portion of the organic sulfur than can be removed without the complete destruction of the coal matrix."

These studies, then, point to a coal desulfurization method which uses reducing agents at temperatures which destruct the coal matrix. The technology to be reported is one such approach to the problem. The conventional approach which incorporates these features is hydrodesulfurization (HDS). This is used in the IGT process listed in Table 1 with the highest product cost of all, $66/ton, and before that was the major step in the Clean Coke Process. HDS uses very high hydrogen to solids ratios to remove sulfur. An example of HDS with char is shown in Figure 1. Here, almost 200,000 SCF H_2/ton was required to take 2.4% sulfur to 0.7% sulfur. In this example, even with large volumes of hydrogen, a compliance fuel was not produced. The main chemical reaction which controls the sulfur removal in HDS and demands the high hydrogen capacity is the equilibrium reaction between ferrous sulfide and hydrogen,

$$FeS + H_2 = Fe + H_2S. \qquad \text{Eq. (1)}$$

At 800°C, the concentration of hydrogen sulfide in hydrogen would have to be less than 2000 ppm before this reaction would proceed forward. To keep the hydrogen sulfide dilute enough for sulfur removal to occur requires 125,000 SCF of hydrogen per ton of coal to remove one percent of sulfur.

CHEMISTRY OF THE "CONVERT-REMOVE" TECHNOLOGY

The "Convert-Remove" technology uses two types of treatment steps to produce a low sulfur product. The Convert step is concerned with lowering the organic sulfur while the Remove step only affects inorganic sulfur.

THE CONVERT STEP

The chemistry of the Convert step includes two reactions. First, hydrogen, reacts with organic sulfur (RS) to form hydrogen sulfide,

$$RS + H_2 = R' + H_2S. \qquad \text{Eq. (2)}$$

Next, the hydrogen sulfide is free to react with in-situ sulfur scavengers to form inorganic sulfides because the hydrogen to solids ratio is low,

$$FeO + H_2S = FeS + H_2O. \qquad \text{Eq. (3)}$$

The overall result of hydrogen treatment is the conversion of organic sulfur to inorganic sulfur with total sulfur remaining constant. This is in extreme contrast to the conventional approach to hydrogen treatment (HDS) where much higher hydrogen to solids ratios are used and sulfur is removed.

THE REMOVE STEP

The removal of the inorganic sulfide sulfur could be accomplished in a number of ways, e.g., acid leach(3), oxidation. However, we have chosen an approach which regenerates the sulfur scavengers, i.e., steam displacement using the reverse of the reaction by which it was formed,

$$FeS + H_2O = FeO + H_2S. \qquad \text{Eq. (4)}$$

While high flow rates of steam are now required to sweep out the hydrogen sulfide to maintain removal, very little water is actually consumed - probably no more than a gallon per ton of char.

EXPERIMENTAL

Two laboratory batch reactor systems are used for desulfurization studies. Figure 2 shows the schematic diagram of the reactor setup. One of the reactor

systems is equipped with two gas chromotographs for on-line gas analysis. One gas chromatograph (a Perkin Elmer Sigma 1) is used to monitor hydrocarbons and fixed gas composition in steam and hydrogen treatments of solids. The sulfur species such as H_2S, SO_2, COS, CH_3SH, CH_3SCH_3, CH_3SSCH_3 and CS_2 of the gas stream are measured by a Tracor gas chromatograph with a Hall detector.

The high sulfur chars used in the experiments reported in the next section were produced in a bench scale entrained flow reactor using an air-nitrogen mixture as carrier gas. Pulverized West Kentucky No. 9 seam coal (Hamilton Mine) at 1075°F for 0.69 sec. with 3% oxygen for decaking was used to produce the coal char.

RESULTS

The strength of the "Convert-Remove" technology comes from the discovery that repetition of short cycles of the two treatment steps is more effective for sulfur removal than is a single two-step cycle with long treatment times. Also we find that when an initial coal devolatilization step has produced a char with a high sulfide sulfur content, an initial Remove treatment step prior to the "Convert-Remove" cycle will produce a lower sulfur product. The results which established these effects are given in Table 2.

Table 2

CONVERT (C) AND REMOVE (R) TREATMENT STEPS

CHAR DESULFURIZATION RESULTS

Process Steps	Total Sulfur	Sulfide Sulfur	Organic Sulfur	SCF H2 / Ton	$lbSO_2$ / MMBTU
Coal	2.75	0.04	1.74	--	4.2
Starting Char	2.42	0.59	1.73	--	4.2
CR	0.64	0.13	0.43	76,800	1.1
RCR	0.49	0.03	0.37	76,800	0.9
CRCR	0.34	0.04	0.29	153,600	0.6
CRCRCR	0.23	0.05	0.13	230,400	0.4
CCCRRR	0.46	0.18	0.18	230,400	0.8
Starting Char	2.48	0.80	1.59	--	4.3
CR	0.94	0.34	0.52	12,800	1.6
CCRRR	0.50	0.10	0.27	25,600	0.7
CRCR	0.43	0.14	0.22	25,600	0.5
RCRCR	0.27	0.11	0.09	25,600	0.4

In the first series of tests, high volumes of hydrogen were used. In the second series, we reduced the hydrogen volume by an order of magnitude. For an initial Convert treatment we have found that volumes as low as 1000 SCF/ton are effective. The results are shown in Figure 3.

The technology has also been tested on a Wyoming sub-bituminous coal and a "Flash Pyrolysis" char (4) from this coal. The results of these tests are shown in Table 3. These data give strong support to our mechanism for organic sulfur removal via an in-situ sulfur scavenger. All treatment times - 5, 10, 15, or 30 min. - with hydrogen produced identical results. The sulfide sulfur capacity of this material is quickly saturated by the hydrogen treatment. Until this sulfide sulfur is removed with steam, the residual organic sulfur is unreactive to the hydrogen. The three step RCR treatment is marginal for ninety percent removal, while the five step RCRCR treatment accomplished almost complete removal.

Table 3

"CONVERT - REMOVE" TREATMENTS OF

WYOMING SUB-BITUMINOUS COAL AND CHAR

	Flash Pyrolysis Char			Coal		
Treatment*	Total Sulfur	Sulfide Sulfur	Organic Sulfur	Total Sulfur	Sulfide Sulfur	Organic Sulfur
Feed Coal	0.79	0	0.63	0.72	0.02	0.61
Char	0.54	0.06	0.41	-	-	-
C(5)	0.64	0.13	0.49	0.74	0.18	0.48
C(10)	0.65	0.11	0.51	0.68	0.19	0.40
C(15)	0.58	0.15	0.40	0.59	0.19	0.32
C(30)	0.64	0.14	0.47	0.74	0.21	0.46
R(15)	0.36	0	0.34	0.55	0.04	0.46
R(30)	0.35	0	0.32	0.53	0.06	0.40
RCR	0.11	0.03	0.06	0.16	0.04	0.08
RCRCR	0.03	0.01	0	0.07	0.04	0

* C-10 min., R-30 min. unless given in parenthesis

A side benefit of the "Convert-Remove" technology is the removal of nitrogen. The nitrogen contents of the coals, chars, and desulfurized chars are given in Table 4.

Table 4

"CONVERT - REMOVE" TREATMENT

ALSO TAKES OUT HALF OF THE COAL NITROGEN

	% N (Dry Basis)		
Coal Description	Feed Coal	Char	Desulfurized Char
W. Ky. No. 9 Seam	1.55	1.65	0.77
Wyoming Sub-bituminous	1.24	1.33	0.64

For both the bituminous and sub-bituminous coals about half of the nitrogen was removed.

CHAR REACTIVITY

Reactivity of char to both combustion and desulfurization is important to the utilization of the "Convert-Remove" technology. All of the chars tested in our program were devolatilized in an entrained flow reactor with high heating rates, short resistance time and moderate temperature using ORC's "Flash Pyrolysis" technology (4). Such conditions have been shown to be ideal for producing reactive chars (5,6,7,8). Essenhigh (5,6) found that a gasification char had equivalent reactivity to combustion as coal, while a COED char produced with lower heating rates and longer residence times had a much lower reactivity. Walker (7,8) in studying reactivity of chars to gasification, found that both rapid heating and low temperature air oxidation of caking coals enhance the reactivity of the chars produced.

We have found that less sulfur is removed by direct "Convert-Remove" treatment of a decaked high sulfur bituminous coal than is removed from char. However, the same level of sulfur removal is found for sub-bituminous coal and char. Consequently when caking high sulfur coals are to be desulfurized, an initial coal devolatilization treatment which produces a reactive char, e.g., partial gasification or decaking and rapid pyrolysis, will be needed. Recovery of the volatilized coal fraction will be important to good economics for any coal feed.

CONCLUSION

The "Convert-Remove" technology is effective in removing ninety percent or more of the sulfur in a reactive char from high sulfur bituminous coals and in sub-bituminous coals or chars.

REFERENCES

1. Contos, G.Y., Frankel, I.F., McCandless, L.C., "Assessment of Coal Cleaning Technology: An evaluation of Chemical Coal Cleaning Processess," EPA-600/7-78-173A, PB-189493/9WE, August 1978.

2. Attar, A. and Dupuis, F., "Data on the Distribution of Organic Sulfur Functional Groups in Coal," Preprints of Division of Fuel Chemistry, ACS, 24 (1), 166 (1979).

3. Tipton, A.B., "Improved Hydrodesulfurization of Coal Char by Acid Leach," ACS Symposium Series, No. 64, 280 (1977).

4. Che, S.C., Duraiswamy, K., Knell, E.W., and Lee, C.K., "Flash Pyrolysis Coal Liquefaction Process Development," Occidental Research Corporation Final Report to the U.S. Department of Energy, Fe-2244-26, April 1979.

5. Essenhigh, R.H. and Csaba, J., Ninth Symposium (Internation) on Combustion, p. 111, Academic Press, 1963.

6. Cogoli, J.G., Gray, D. and Essenhigh, R.H., "Flame Stabilization of Low Volatile Fuels," Combustion Science and Technology, 16, 165, (1977).

7. Ashu, J.T., Nsakala, N.Y., Mahajan, O.P. and Walker Jr., P.L., "Enhancement of Char Reactivity by Rapid Heating of Precusor Coal," Fuel, 57, 250 (1978).

8. Mahajan, O.P., Komatsu, M. and Walker Jr., P.L., "Low Temperation Air Oxidation of Caking Coals, I. Effects on Subsequent Reactivity of Chars Produced," Fuel, to be published.

Figure 2

Laboratory Batch Reactor for "Convert-Remove" Treatment

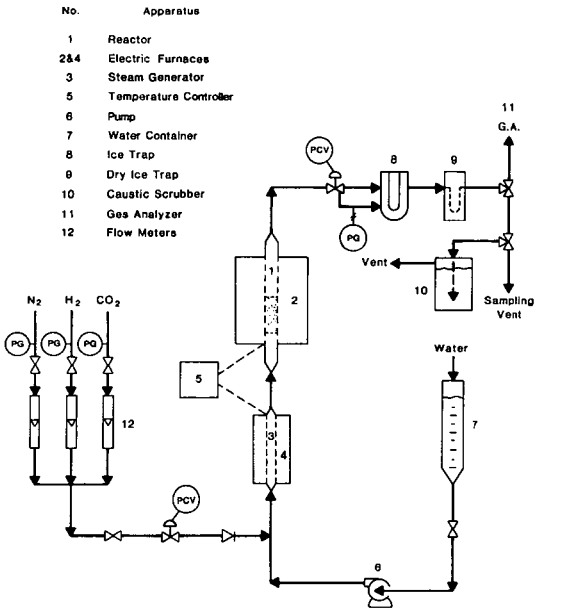

4645

Figure 1

Hydrodesulfurization Requires High Hydrogen Capacity

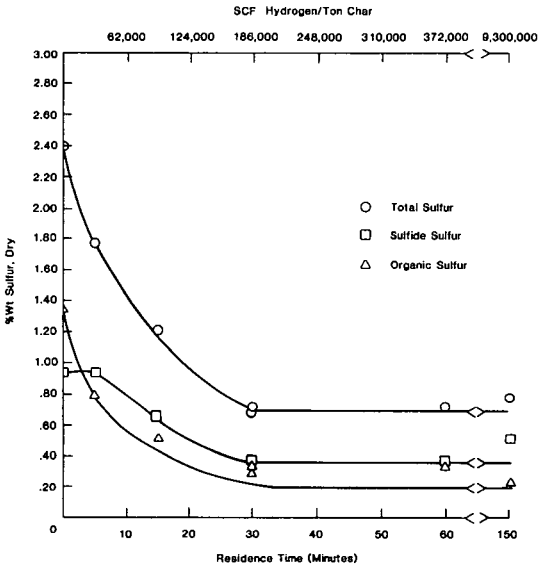

2899
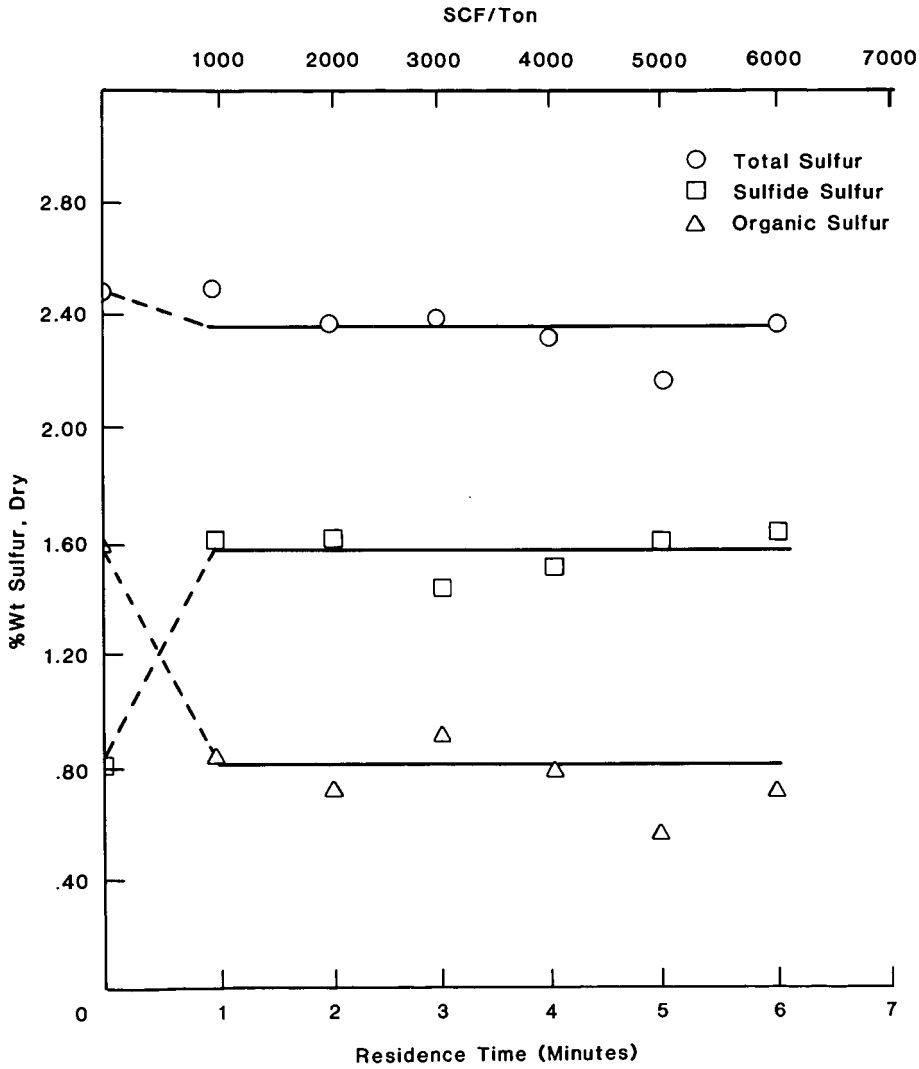
Figure 3
Convert Treatment Uses Low Hydrogen Volumes