ENVIRONMENTAL ASSESSMENT OF WASTE-TO-ENERGY CONVERSION SYSTEMS

K. P. Ananth,* M. A. Golembiewski,* H. M. Freeman+

*Midwest Research Institute, 425 Volker Boulevard, Kansas City, Mo. 64110

+Industrial Environmental Research Laboratory, U.S. EPA
Cincinnati, Ohio 45268

Introduction

Increased emphasis on energy and material recovery and the need for alternatives to solid waste disposal in landfills have generated growing interest in waste-as-fuel processes. The processes include, on a generic basis, waterwall incinerators, pyrolysis systems, combined fuel-fired systems (coal plus refuse derived fuel [RDF], RDF plus municipal sewage sludge, coal plus wood waste, and biochemical conversion of waste to methane.

The Fuels Technology Branch of EPA's Industrial Environmental Research Laboratory in Cincinnati is sponsoring a program at Midwest Research Institute (MRI) to conduct environmental assessments of some of the above waste-to-energy conversion processes. The overall objective of this program is to evaluate the potential multi-media environmental impacts resulting from using combustible wastes as an energy source and thereby identify control technology needs. As part of this program, MRI has undertaken fairly extensive sampling and analysis efforts at the following waste conversion facilities.

- A 200 ton/day refuse pyrolysis system
- A 120 ton/day municipal incinerator fired with Municipal Solid Waste (MSW)
- A 10 MW power plant boiler fired with wood waste and No. 2 oil
- A 70,000 lb/hr steam boiler fired with coal and densified refuse-derived fuel (d-RDF)
- A 20 MW power plant boiler fired with RDF

A description of the facility, the sampling and analysis methods used, and the results obtained are individually presented below for each of the above facilities tested.

Refuse Pyrolysis System

The Union Carbide refuse pyrolysis system (PUROX) at South Charleston, West Virginia, was designed to pyrolyze 200 tons/day of refuse-derived fuel. The refuse fuel was produced by shredding MSW to a 3 in. size and then removing magnetic materials from the shredded waste. The PUROX system is a partial oxidation process that uses oxygen to convert solid wastes into a gas having a higher heating value (HHV) of about 370 Btu/scf.

Figure 1 is a schematic illustration of the Purox process. Raw refuse is received by truck in the plant's storage building. It is moved and stacked in the storage area by a front end loader. The same loader picks up the stored waste, weighs it on a platform, and dumps it on a conveyor leading to the shredder, where it is shredded to a 3-in. size. Ferrous material is removed by a magnetic recovery system.

The refuse fuel is fed into the top of the reactor, the principal unit on the process, by two hydraulic rams. There are three general zones of reaction within the reactor (drying, pyrolysis, and combustion). The reactor is maintained essentially full of refuse, which slowly descends by gravity from the drying zone through the pyrolysis zone into the combination zone. A counterflow of hot gases, rising from the combustion zone at the bottom, dries the incoming, moist refuse. As the material progresses downward it is pyrolyzed to form fuel gas, char, and organic liquids.

Oxygen is injected into the bottom hearth section at a ratio of about 20% by weight of incoming refuse. The oxygen reacts with char formed from the refuse to generate temperatures of 1370 to 1650°C in the lower zone, which converts the noncombustibles into a molten residue. This residue is discharged into a water quench tank where it forms a slag.

The hot gases from the hearth section are cooled as they rise through the zones of the reactor. After leaving the reactor, the gases are passed through a recirculating water scrubber. Entrained solids are separated from the scrubber water in a solid-liquid separator, and recycled to the reactor for disposal. The water product discharged from the separator system is sent to a plant treatment system. The gas leaving the scrubber is further cleaned in an electrostatic precipitator (ESP) and then cooled in a heat exchanger prior to combustion in a flare combustor. During the tests the gas was burned in a package boiler transported to the site for these tests. The fuel gas consisted of about 40% CO by volume, 23% CO_2, 5% CH_4, 26% H_2, and the rest being N_2, C_2H_4, etc.

Sampling at the Purox facility was directed to the three effluent streams; slag, scrubber effluent, and gaseous emissions from a boiler when fired with Purox gas and when fired with natural gas. An overview of the sampling and analysis scheme is shown in Figure 2. As can be seen in this figure, sampling and analysis of each stream was rather complex, being directed to conventional pollutants but including, among others, priority pollutants in water samples and sampling of both liquid and gaseous emissions for most of the analyses prescribed under EPA's Level 1 environmental assessment protocol. Particulate emission sampling in the boiler stack was conducted according to EPA Method 5, but using a High Volume Sampling System (HVSS) because of the expected low particulate loading. Boiler stack sampling also included use of the Level 1 SASS* train.

Water samples also underwent analysis for priority pollutants, but the data are too lengthy for inclusion in this paper. The results of these analyses showed that a few of these pollutants were present at detectable levels in the scrubber effluent, but that the Unox system did effectively reduce their concentrations.

---

* Source Assessment Sampling System.

Results of the testing effort showed that, of the criteria pollutants, only NO_x and particulate emissions increased when burning Purox gas as compared to natural gas. NO_x and particulate levels were of the order of 350-400 ppm and 0.002-0.005 gr/scf respectively. SO_2 emissions averaged 70-100 ppm. Particulate and SO_2 emissions were below present standards, whereas NO_x will require further reduction. Also, analysis for metals and other pollutants indicate that these should not present any problems.

Because of the difficulty involved in interpreting much of the data collected in this test, especially the Level 1 analysis results, the environmental assessment work was extended to include application of the methodology known as the Source Analysis Model (SAM/1A) developed by EPA. Basically, this model compares the measured concentrations of pollutants with approximate emission concentration guidelines known as MATE values (minimum acute toxicity effluents). These MATE values have tabulated for several compounds or classes and there is a specific MATE concentration for each compound and for each type of effluent stream (solid, liquid, or gaseous). The MATE values are used to compute the ratio of the measured concentration to the MATE concentration, and this ratio is termed the "degree of hazard." The "degree of hazard" for each pollutant is then summed to provide the "degree of hazard" for the effluent stream under consideration. This value, when multiplied by the effluent flowrate, in specific units (e.g., liters per second), establishes the "toxic unit discharge rate" (TUDR) for the stream.

The SAM/1A methodology, as described above, was utilized to analyze the data obtained for each of the three primary effluent streams from the Purox process (slag, scrubber effluent, and boiler stack gas). Based on the SAM/1A methodology, the scrubber effluent had the highest "degree of hazard," being considerably greater than the "degree of hazard" for the input river water. However, the slag stream had the highest "toxic unit discharge rate." The boiler flue gas effluent had the lowest "degree of hazard" and the lowest "toxic unit discharge rate." Both of these values were comparable to the baseline values computed for boiler flue gas when burning natural gas.

Municipal Incinerator Fired With MSW

The Braintree municipal incinerator (Braintree, Massachusetts) is a mass-burn facility consisting of twin water-wall combustion units, each with a design capacity of 120 tons of MSW for 24-hr period. A portion of the steam produced (20-35%) is supplied to neighboring manufacturers and the remainder is condensed. Each furnace is equipped with an ESP and both ESP's exhaust to a common stack.

The Riley Stoker boilers are of the single pass design, each having a rated capacity of 30,000 lb of steam/hr at 400°F and 250 psig. The ESP units are single field, 12 passage precipitators with a specific collection area of 125 ft^2/1000 acfm; each has a design collection efficiency of 93%.

Environmental assessment of the incinerator facility was conducted using EPA approved sampling and analysis procedures similar to these identified in Figure 2. Results and conclusions of the testing effort are summarized below.

Of the criteria pollutants, SO_2, NO_x, and hydrocarbon emissions were low. However, CO levels were high and could not be explained considering the large quantities of excess air that were used. The average particulate concentration was 0.24 gr/dscf, corrected to 12% CO_2. This level exceeded the federal and state regulations. However, subsequent tests for compliance had an outlet particulate loading of 0.074 gr/dscf, which shows compliance.

Elemental analysis of the glass-and metal-free bottom ash revealed an overall increase in the elemental concentrations when compared to the refuse feed. The collected fly ash contained levels of chlorides, sulfates and some trace metals which may be of concern. PCB's were not detected in the collected fly ash; 4 PAH compounds were identified.

Levels of BOD, COD, oil and grease, TSS and TDS in the bottom ash quench water do not appear to be of concern. The phenolic content was found to be < 0.1 mg/liter in all samples.

Levels of gaseous chlorides and other halides were low. Presence of PCB's was confirmed only in the SASS train XAD-2 resin at a concentration of 3.6 $\mu g/m^3$.

Results of the SAM/1A environmental assessment procedure showed the incinerator stack emissions to have the highest apparent degree of health hazard. Further analysis is needed to determine the exact composition of the organic components of the stack emissions to better ascertain the hazard potential. SAM/1A also showed that the bottom ash effluent had the largest toxic unit discharge rate due primarily to the abundance of phosphorus and metals in this stream.

Power Plant Boiler Fired With Woodwaste and Fuel Oil

The No. 1 unit at the Burlington Electric Plant (Burlington, Vermont) was originally a coal-fired boiler which has since been modified to fire wood chips with supplementary No. 2 fuel oil. Because of the high moisture content of the chips, the boiler cannot provide the desired steam output on wood alone. Therefore, No. 2 fuel oil is used. Steam production is rated at 100,000 lb/hr, which powers a 10 MW turbine generator. Residual ash from the boiler is discharged at the end of the grate into a hopper and is then pneumatically transported to an emission control system consisting of two, high efficiency mechanical collectors in series. For a flue gas flow rate of 60,000 acfm at 330°F, the collectors were designed for an overall pressure drop of 6.5 in. H_2O and a collection efficiency of 97.75%.

Sampling and analysis was based on the matrix shown in Figure 3. Major results and conclusions of the tests are as follows:

On a heat input basis, wood accounted for 80% of the boiler fuel, and oil the remainder. The heat of combustion of wood was 5870 Btu/lb (as received) and for oil, the heat of combustion was 19,500 Btu/lb.

Bottom ash analysis indicated that most elements were more concentrated in the ash relative to the input fuels. No PCB's were detected in bottom ash but one PAH compound, phenanthrene, was present at a concentration of 0.89 μg/g. Primary and secondary collector ash contained no PCB's but several PAH compounds were identified in the secondary ash, with one sample containing 10 μg/g of phenanthrene.

Particle sizing at the collector inlet and outlet, could not be established due to constant plugging of the optical counters dilution system. Stack concentration of particulates averaged 0.08 gr/dscf and the collector had a particulate efficiency of 94.2%. NO_x and SO_2 concentrations averaged 66 and 138 ppm respectively. CO averaged 213 ppm and hydrocarbons 9 ppm. Analysis of Method 5 particulate indicated concentrations approaching 100 μg/dscm for Pb, Ba, Sr, Fe and Ti in the stack gases. PCB and PAH tests of the stack gases were negative.

EPA's SAM-1A analysis indicated that the secondary collector ash contained the highest degree of hazard although all three ash streams were similar in the magnitude of their hazard values. Stack emissions showed a low degree of hazard. The primary collector ash had the highest toxic unit discharge rate.

Steam Boiler Fired With Coal and Densified Refuse-Derived Fuel (d-RDF)

Emission tests were conducted on the GSA/Pentagon facility's No. 4 boiler in Arlington, Virginia during a test burn program coordinated by the General Services Administration (GSA) and the National Center for Resource Recovery (NCRR). The No. 4 unit is an underfeed-retort stoker boiler with a rated steam capacity of 70,000 lb/hr at 125 psig and 350°F. During the tests, the boiler was equipped with a multiclone collector for removal of particulates from the exhaust gases.

The test burn program included three fuel firing modes: 100% coal (baseline conditions), 20% d-RDF + 80% coal, and 40% d-RDF + 60% coal. Samples of coal, d-RDF, and the coal/d-RDF mixtures were collected hourly by NCRR and analyzed for moisture, ash, heating value, and chemical composition. Several daily samples of bottom ash were also collected by NCRR and anlyzed for loss-on-ignition and chemical composition. MRI conducted sampling and analysis of the stack effluent. Parameters measured included particulate concentration, gaseous criteria pollutants (SO_2, NO_x, CO and total hydrocarbons), and chlorides. The particulate samples were further and analyzed for lead content.

Results of the emission tests showed that:

* Particulate emissions were reduced from 22 to 38% when d-RDF was blended with the original coal fuel. Filterable particulate emissions were lowest when using the 20% d-RDF blend and rose again when the proportion of d-RDF was raised to 60%. This finding may not be conclusive, however, since the boiler load was held steady during the 20% RDF firing but not during the 60% mode.

* The amount of particulate lead emitted when burning d-RDF with coal is substantially higher than that from combustion of coal alone (an average of 1000 $\mu g/m^3$ with 20% d-RDF, and 2,260 $\mu g/m^3$ with 60% d-RDF, versus 330 $\mu g/m^3$ with coal only).

* Chloride emissions showed no definite trend which could be used to correlate chloride emissions with RDF modes, though slightly higher concentrations of HCl were observed in two of the samples collected during combustion of the 60% d-RDF blend.

* Concentrations of sulfur dioxide, nitrogen oxides and carbon monoxide all appeared to decrease slightly when the RDF was used with coal. Because of the very low sulfur content of d-RDF, SO_2 emissions were reduced progressively as the proportion of d-RDF with coal was increased. However, the reduction in NO_x and CO levels, may or may not have been the direct result of burning d-RDF since they are highly dependent on boiler combustion conditions.

Power Boiler Fired With RDF

The Hempstead Resource Recovery Plant (Long Island, New York) receives municipal solid waste, produces a refuse-derived fuel and converts the fuel to electrical power. The facility consists of two distinct segments: a refuse processing operation, utilizing the Black Clawson Hydrasposal system; and a power house, which contains two steam boilers and two, 20 MW electrical turbine generators, plus the associated control equipment.

Tests were conducted by MRI on the No. 2 unit of the power house, which is an air-swept spreader stoker, waterwall boiler with a nominal capacity of 200,000 lbs/hr of steam at 625 psig and 750°F. The boiler was fired with 100% refuse-derived fuel (RDF), although auxiliary oil burners are used for start-up and during fuel feed interruptions. Air pollution controls for the boiler consist of a bank of 12 mechanical cyclones followed by an electrostatic precipitator.

The purpose of the assessment was primarily to investigate organic constituents of the stack gases and to quantify odorous components. However, other tests were also included. Emission streams evaluated included the boiler bottom ash, cyclone ash, ESP ash and the stack effluent gases. Samples of the RDF were also collected and analyzed for moisture plus chemical and elemental composition. The three ash streams were analyzed for elemental composition. Stack emissions were continuously monitored for SO_2, NO_x, CO O_2 and total hydrocarbon concentrations, and were also tested to determine levels of vaporous mercury and aldehydes. In addition, a sample was collected using the EPA Source Assessment Sampling System (SASS) for analysis under EPA's Level 1 protocol.

Results of the test program did not indicate any pollutant emissions of major concern. Stack gases contained relatively low concentrations of SO_2, NO_x, and hydrocarbons. Carbon monoxide levels were slightly greater than anticipated.

Emissions of carbonyl compounds (aldehydes) were detected at a maximum level of 7 ppm (6.5 lb/hr).

Mercury vapor concentrations in the stack effluent were very low (< 0.12 mg/m^3), and it appears that mercury levels are greatest in the fly ash collected by the electrostatic precipitator. The concentration of mercury in samples of the RDF was constant at about 3 μg/g.

Several trace metals were detected in the stack gases at relatively high concentrations. Of these, lead, antimony, chromium, and arsenic were most notable. Their respective concentrations in the SASS sample were 580, 460, 640, and 560 μg/m^3. Elemental analysis of the bottom ash, cyclone ash, and ESP ash streams also indicated that many of the more volatile elements were associated with the smaller sized particles.

Organic analysis of the SASS sample, using EPA Level 1 and additional GC/MS analytical techniques, showed a variety of organic constituents. No single compound group appeared to predominate, although several polynuclear aromatic hydrocarbons were detected. All organic results were qualitative.

Compounds consistently observed in all SASS component extracts included naphthalene, fluoranthene, acenaphthylene, pyrene, phenanthrene/anthracene, bis(2ethylhexyl) phthalate, and diphenylamine. The majority of additional compounds were found in the XAD-2 resin extract and included two chlorobenzenes, hexachlorobenzene, fluorene, and di-butylphthalate.

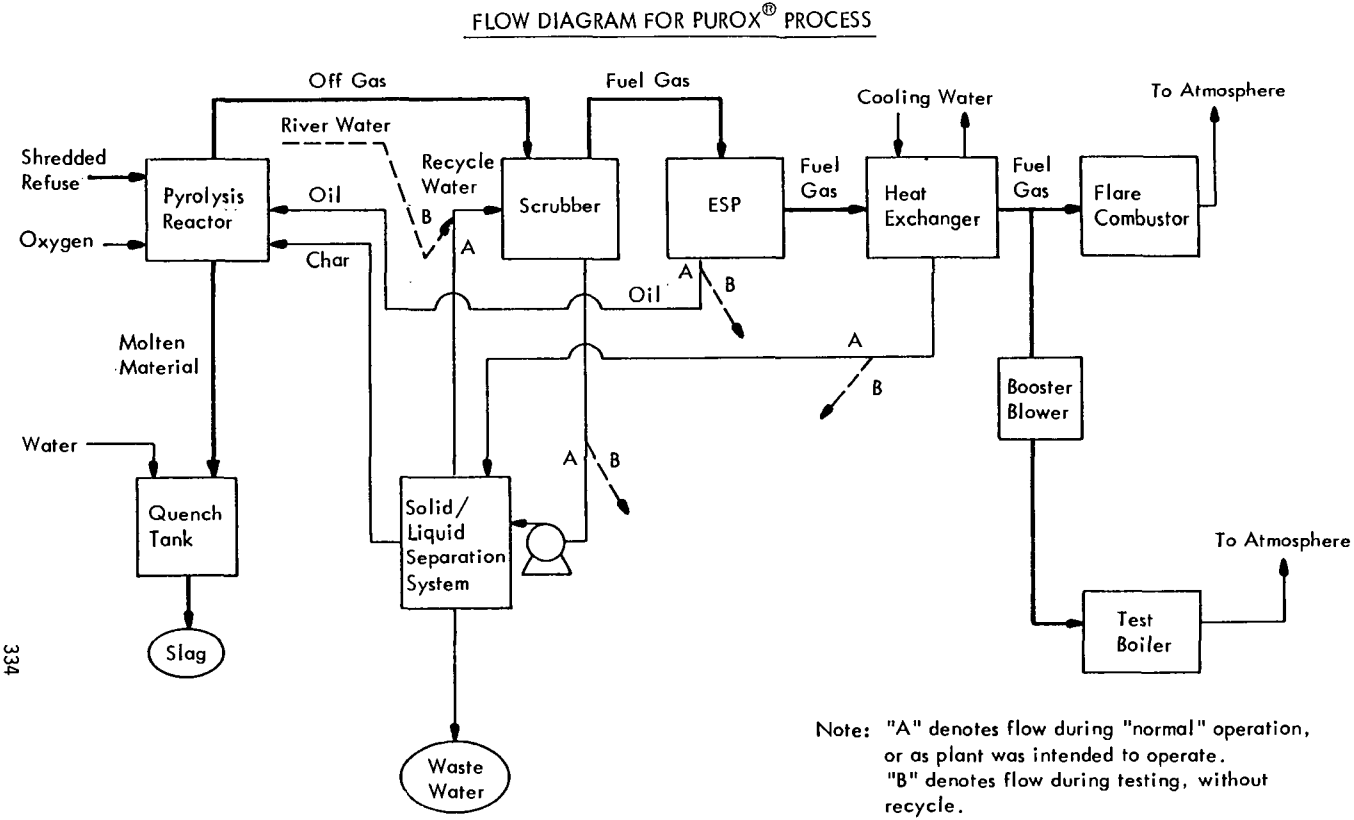

Figure 1. Flow diagram for Purox® process.

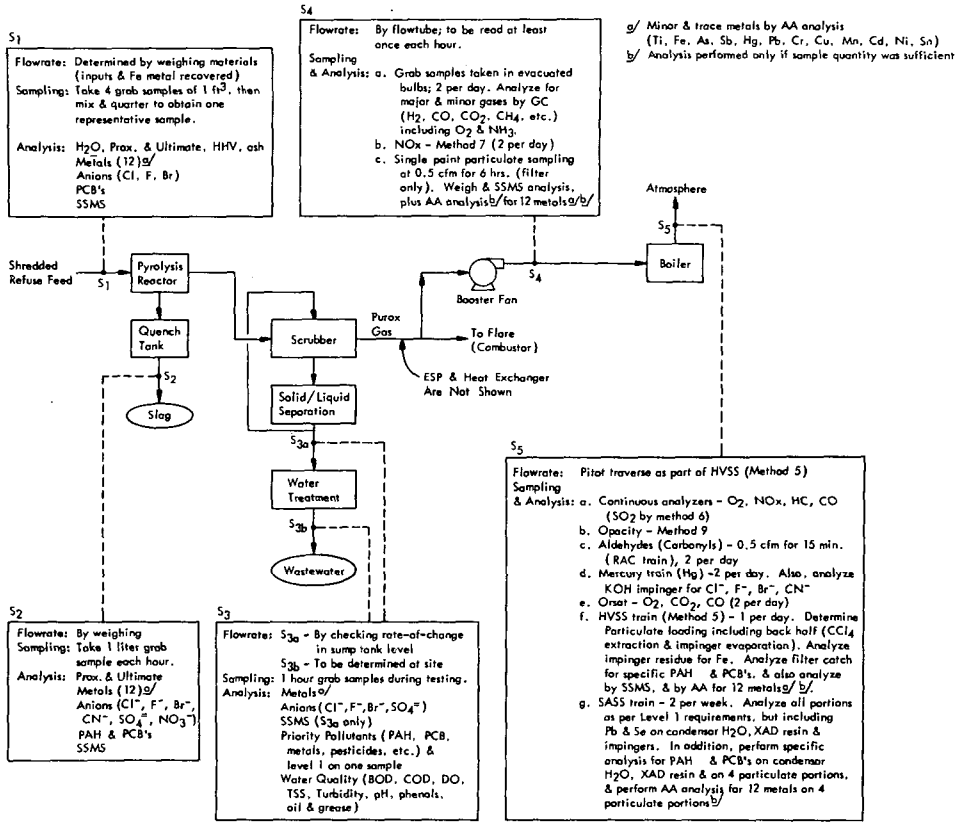

Figure 2. Sampling and analysis scheme for Purox® process.

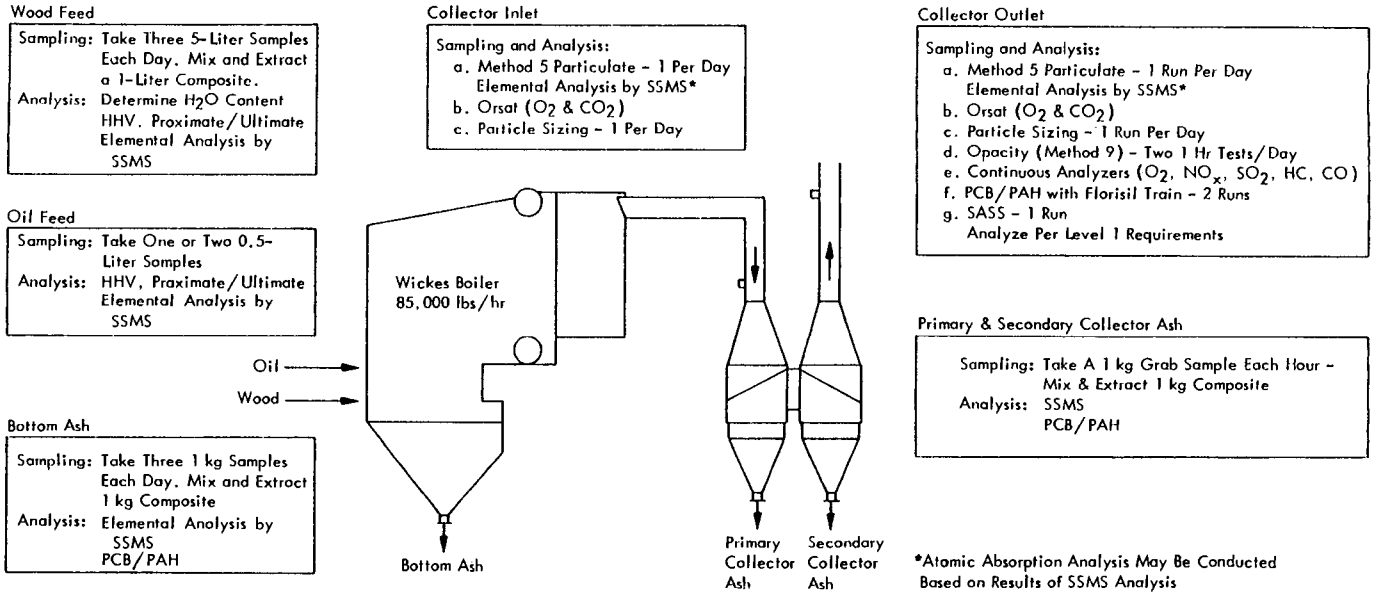

Figure 3. Test matrix for Burlington Electric's wood and oil-fired power plant.