THE ORGANIC CHEMISTRY OF CALCIUM: A NEW PHENOL SEPARATION/RECOVERY APPROACH

Richard H. Schlosberg and Charles G. Scouten

Corporate Research Science Laboratories
Exxon Research and Engineering Company
P.O. Box 45, Linden, New Jersey 07036

INTRODUCTION

Phenols (e.g. phenol,cresols, xylenols) comprise a significant fraction of most coal liquids. Alkylphenols alone comprise up to 20 wt% of the liquid products from such direct coal liquefaction processes as H-Coal, Solvent-Refined Coal (SRC) and the Exxon Donor Solvent (EDS) process. The toxic, corrosive and chemically reactive nature of phenols is a potential source of problems in the direct utilization of coal liquids as synthetic fuels.

One of the more common schemes for separating phenols from coal liquids involves treatment with aqueous caustic to produce water-soluble sodium phenates. After separation of the raffinate, treatment of the sodium phenate solution with an acid, such as carbon dioxide, can be used to reconstitute the phenols.(1) One major difficulty with this method is the co-extraction of non-phenolic organic materials into the aqueous phase along with the phenols. These co-extracted organics can subsequently appear as impurities in the recovered phenols, thereby rendering the phenolic stream sufficiently impure to preclude its use as a chemical feedstock for the production of polymers or polymer intermediates. This paper describes new organocalcium chemistry which allows separation and recovery of phenols from hydrocarbon streams, and which avoids the difficulties descussed above.

EXPERIMENTAL SECTION

All manipulations were carried out under a nitrogen atmosphere to exclude carbon dioxide and oxygen. Transfers of solids were performed in a glove box. A small positive pressure of nitrogen was maintained during half-salt preparations, using a mineral oil bubbler as a pressure relief. A Perkin-Elmer Model TGS-2 Thermogravimetric System, or a comparable unit assembled from components, was used for TGA studies. Under argon, the TGA oven was programmed from ambient to 850°C at 10°C/min, then heating was continued at 850°C under air for residue combustion. Elemental analyses were performed by personnel of the ER&E Analytical and Information Division.

Materials.

Commercially obtained solvents and reagents were of analytical reagent quality and were used as-recieved. Sodium phenate and potassium phenate were prepared from phenol and the corresponding hydroxide, as described by Kornblum and Lurie.(7)

Preparation of Calcium Half-Salt of Phenol in Aqueous Slurry.

A two-liter flask was charged with 37.0 g of calcium hydroxide (0.50 mole), 47.0 g of phenol (0.50 mole) and 1 liter of carbon dioxide-free water. The flask was fitted with a magnetic stirring bar, and a condenser which was connected to a low-pressure nitrogen source. The stirred reaction slurry was heated at 85-90°C for 16 hr, then filtered while still hot. The product was isolated by evaporating the filtrate to dryness under reduced pressure, then drying the solid to constant weight under vacuum. The yield of calcium half-salt was essentially quantitative, 74.4 g (theoretical yield: 75.1 g).

The elemental composition of the product is given in Table I.

Preparation of Calcium Half-Salt of Phenol in Benzene.

The reaction of calcium hydroxide with excess phenol in benzene is described to illustrate the general procedure used to prepare half-salts in organic media.

A 500-ml Erlenmeyer flask was charged with 9.91g of calcium hydroxide (134 mmol), 25.2 g of phenol (268 mmmol, 2-fold molar excess) and 450 ml of benzene, then attached to a low-pressure nitrogen source. The reaction slurry was stirred for 72 hr at ambient temperature then filtered, washing the filter cake thoroughly with benzene to remove unreacted phenol. The resulting solid was dried to constant weight at 50°C under vacuum to give 18.8 g of the calcium half-salt (93% of the theoretical yield, 20.1 g) as a fluffy, white powder (Found: 47.39% C, 3.97% H, 25.94% Ca, 22.13% O by NAA; Calculated: 47.98% C, 4.03% H, 26.69% Ca, 21.31% O).

The TGA of this product is shown in Figure 1. An X-ray analysis (powder pattern) indicated that no significant amount of calcium hydroxide remained. No weight was lost when a 5-g sample of the solid was extracted for 72 hr with ether in a Soxhlet apparatus, and no phenol was found by GC analysis of the ether extracts.

Pyrolysis of Calcium Half-Salt of Phenol.

The pyrolysis of the calcium half-salt of phenol at 650°C for 60 min. is described to illustrate the general procedure used for pyrolyses in the minipyrolyzer (Figure 2).

In a nirogen-flushed glove box, the quartz retort was charged with 1.55 g of the phenol half-salt (10.3 mmol) and a gas bag was attached to the condenser vent. Dry Ice was added to cool the condenser, and the retort was plunged into the preheated block which was maintained at 650°C. After 1 hr, the retort was removed from the block and the condenser was allowed to warm to room temperature. The gas bag, which contained only a small amount of gas was removed and discarded. The retort contained 0.61 g of residue (39% of the charge, theoretical amount of CaO: 0.59 g). From the condenser, 0.93 g of liquids (60% of the charge, theoretical amount of phenol: 0.97 g) was recovered using a small amount of methylene chloride solvent. Analysis by GC indicated that phenol (97%) and a trace of diphenyl ether comprised the liquid products. Thus, a 94% phenol recovery and a nearly quantitative mass balance were obtained in this experiment.

Preparation of Calcium Diphenate in Toluene.

To a one-liter, round-bottommed flask was charged 7.41 g of calcium hydroxide (100 mmol), 23.5 g of phenol (250 mmol) and 700 ml of toluene. The flask was fitted with a magnetic stirring bar and a Dean-Stark trap to which was fitted a reflux condenser connected to a low-pressure nitrogen source. The stirred reaction mixture was heated under reflux for 72 hr, then filtered. Solvent was evaporated under reduced pressure, and the resulting brown solid was dried to constant weight under vacuum at 50°C. The yield of calcium diphenate was 15.14 g (70% of the theoretical yield of 22.63 g; Found: 61.86% C, 4.48% H; Calculated: 63.70% C, 4.45% H, 17.71% Ca, 14.14% O).

RESULTS AND DISCUSSION

When analytical reagent grade phenol was treated with an equimolar amount of calcium hydroxide in a water slurry at 85-90°C, a salt was formed which was not calcium diphenate, PhO-Ca-OPh, as shown in Table I. Instead, the data are consistent with formation of the calcium half-salt, PhO-Ca-OH (Eq. 1). This compound had previously been prepared by treating calcium diphenate with a mixture of carbon monoxide and hydrogen at 105 - 110°C.(2)

$$\text{Ph-OH} + \text{Ca(OH)}_2 \xrightarrow{25 - 100°C} \text{Ph-O-Ca-OH} + \text{H}_2\text{O} \qquad (1)$$

Calcium half-salts can also be prepared in organic media. The products obtained by reacting a two-fold excess of phenol with calcium hydroxide in benzene, toluene, xylene, pentane or cyclohexane slurries at 25°C were identical to those of the half-salt obtained in water. Thus, formation of calcium half-salts is a general reaction, and is not specific to the aqueous medium.

Under the mild conditions discused above, the calcium phenol half-salt is not sufficiently basic to react with additional phenol to form calcium diphenate. In a toluene slurry, calcium diphenate could, however, be obtained under forcing conditions: 72 hr under reflux with continuous separation of water (Dean-Stark trap).(3) The product was isolated by evaporating to dryness under reduced pressure. Calcium diphenate so produced was readily soluble in a variety of organic solvents including benzene, toluene, xylene and ether. In contrast, the calcium half-salt of phenol was insoluble in these solvents, and in dipolar aprotic solvents, such as tetrahydrofuran, N,N-dimethylformamide and N-methylpyrrolidone. Further support for the proposed half-salt structure was obtained from X-ray diffraction (powder pattern) experiments, which indicated the absence of calcium hydroxide in the product. Extraction of the product salt with ether in a Soxhlet apparatus failed to remove phenol, thereby ruling out the possibility of physically adsorbed phenol and confirming the half-salt structure.

The thermal chemistry of the calcium half-salt of phenol is most interesting. When the material was heated at a programmmed rate of 10°C/min in a thermogravimetric analyzer (TGA) under argon, it was stable to about 450°C (Figure 1).(1) Upon continued heating, devolatilization of the sample occurred (450-650°C) with a weight loss corresponding to the loss of phenol. An X-ray diffraction analysis of the 650°C residue revealed that calcium oxide and some calcium hydroxide were present. Further heating to 850°C in the presence of air led to a very small additional weight loss and to a residue which X-ray analysis showed to be essentially pure calcium oxide. Both at 550°C and 650°C in a small, batch pyrolysis apparatus (minipyrolyzer, Figure 2) the calcium half-salt of phenol yields phenol as the major volatile organic product (Equation 2). Table II summarizes the pyrolysis data.

$$\text{Ph-O-Ca-OH} \xrightarrow{\text{Pyrolysis at 550-650°C}} \text{Ph-OH} + \text{CaO} \qquad (2)$$

In a similar manner, the calcium half-salt of p-cresol was prepared. Thermal stability of the p-cresol half-salt is comparable to that of the phenol half-salt, but the presence of the side chain alters the distribution of products on pyrolysis, as shown in Table III. At the lower pyrolysis temperature of 550°C, cresols are the only significant products, though conversion is slow. At 650°C however, thermal cracking reactions become important. In this case, both hydrogen and methane were found in the gas product. Phenol, presumably produced by thermal dealkylation, was found in the liquids, along with the cresols.

These results are in sharp contrast to the pyrolyses of sodium phenate and potassium phenate, which under comparable conditions yield a char and gas, but essentially no volatile liquid organic products.(2,4)

The unexpected results with the organocalcium system suggested a new phenol separation and recovery approach based on the reactions shown in Equations 1 and 2. We have demonstrated phenol recovery via this half-salt technique, using both model compounds and raw naphtha from the EDS coal liquefaction process.(5,6)

CONCLUSIONS

The reaction of calcium hydroxide with phenols in aqueous or organic media provides a simple method for preparing the corresponding calcium phenol half-salts. In sharp contrast to pyrolyses of alkali metal phenates which yield gas and char, pyrolyses of calcium phenol half-salts yield calcium oxide and phenols. The unexpected results with the organocalcium system suggested a new phenol separation/recovery approach.

ACKNOWLEDGEMENTS

The authors are grateful to Drs. Martin L. Gorbaty, Daniel R. Neskora and Richard P. Rhodes for their enthusiastic support. We acknowledge the excellent technical support of H. Warren Dougherty, Constance A. Cook, Argo Kurs and Paul J. Szajowski.

REFERENCES

1. F. Fischer and U. Erhardt, Ges. Abhandl. Kenninis. Kohle., 1919, 4, 237.

2. F. Sseliwanow, J. Russ. Phys.-Chem. Soc., 1913, 45, 1535.

3. The preparation of calcium diphenate under somewhat different conditions is decribed by H. D. Kluge and K. Drake, U.S. Patent 2,870,134 (1959 to The Texas Company).

4. Key results reported in Reference 1 have been confirmed by L. Matty and by M. Siskin of this laboratory.

5. L. E. Furlong, E. Effron, L. W. Vernon and E. L. Wilson, Chem. Eng. Progr., 1976(Aug.), p.69.

6. R. H. Schlosberg and C. G. Scouten, U.S. Patent 4,256,568 (March 17, 1981).

7. N. Kornblum and A. P. Lurie, J. Amer. Chem. Soc., 1959, 81, 2710.

Table I. Elemental composition of the salt obtained from calcium hydroxide and phenol in an aqueous slurry at 85-90°C.

	$Ca(OPh)_2$	PhO-Ca-OH	Calcium Salt
Element	Calculated, Wt%	Calculated, Wt%	Found, Wt%
Carbon	63.7	48.0	46.0 (±0.4)
Hydrogen	4.4	4.0	3.89 (±0.04)
Calcium	17.7	26.7	26.8 (±0.4)

Table II. Pyrolysis of the calcium half-salt of phenol in the minipyrolyzer gives phenol and calcium oxide.

Temperature, °C	Residence Time, minutes	Product Yields, Wt% Solid	Product Yields, Wt% Liquid	Liquid Yield, % of Theoretical	Liquid Analysis, Wt% Ph-OH	Liquid Analysis, Wt% Ph-O-Ph
550	5	77 (±1)	24 (±2)	38	97 (±2)	Trace
650	5	60 (±2)	39 (±2)	62	94 (±1)	2
650	60	40 (±2)	60 (±2)	96	97 (±1)	Trace

Table III. The side chain alters product distribution in the pyrolysis of the p-cresol half-salt.

Temperature, °C	Residence Time, minutes	Product Distribution, Wt% Solid	Product Distribution, Wt% Gas	Product Distribution, Wt% Liquid	Liquid Yield, % of Theoretical	Liquid Analysis, Wt% Phenol	Liquid Analysis, Wt% Cresols
550	5	92	---	8	12	--	98
650	5	61 (±1)	4 (±3)[a]	35 (±3)	59	24 (±1)	38 (±3)

(a) Approximately 80 wt% methane and 16 wt% hydrogen by mass spectrometric analysis.

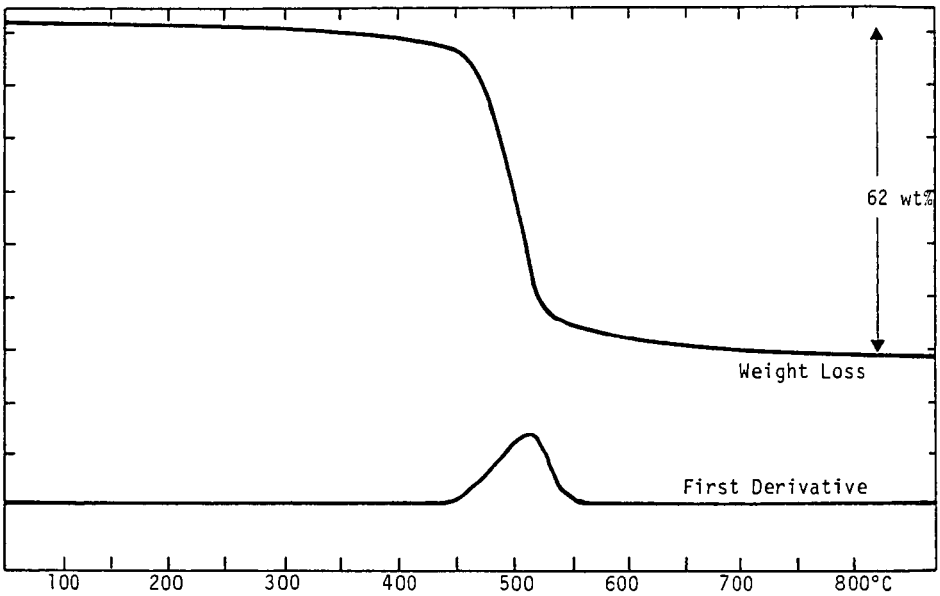

Figure 1. The weight lost during TGA of the calcium half-salt of phenol corresponds to loss of phenol.

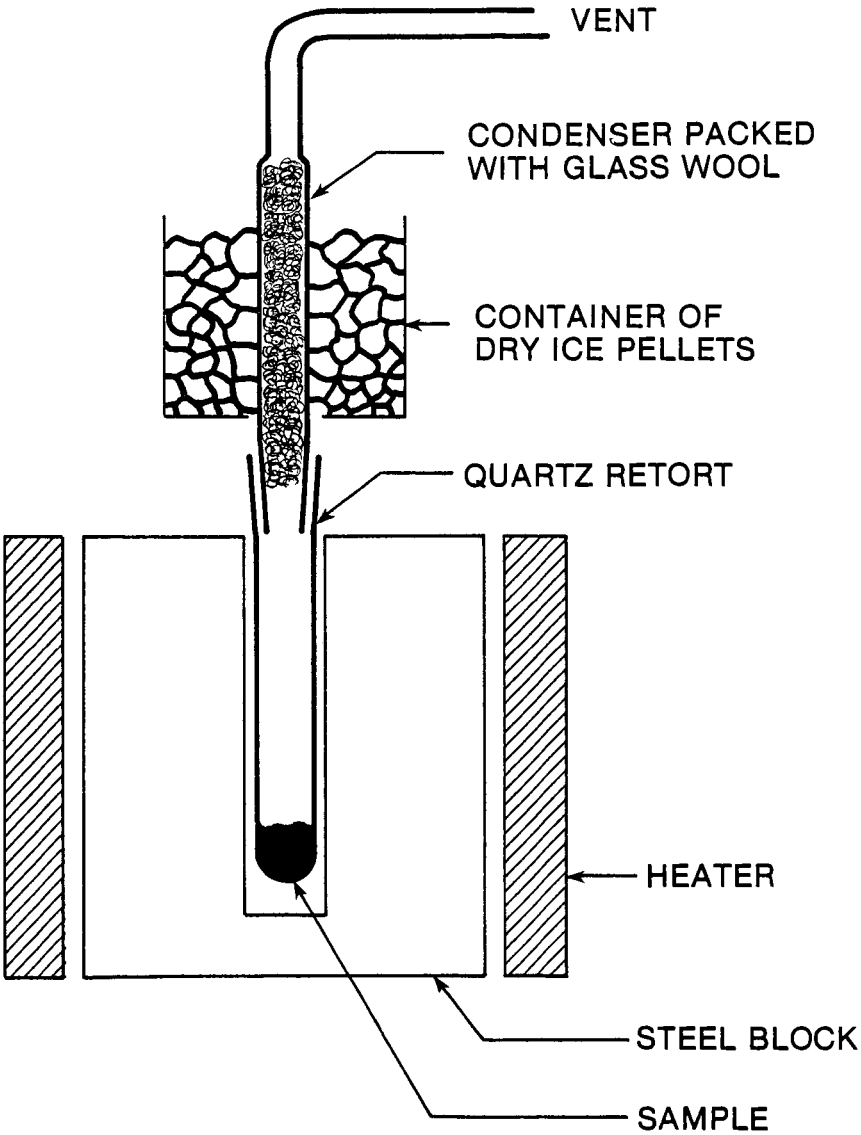

FIGURE 2. MINIPYROLYZER