TWO-STAGE COPROCESSING OF SUBBITUMINOUS COALS AND BITUMEN OR HEAVY OIL*

B. Ignasiak, T. Ohuchi, P. Clark, D. Aitchison and T. Lee

Coal Research Department
Alberta Research Council
1 Oil Patch Drive
P.O. Bag #1310
Devon, Alberta, Canada
TOC 1E0

ABSTRACT

Pretreatment of subbituminous coal with an appropriately formulated mix of carbon monoxide and water, in presence of bitumen or heavy oil, results in very fast reactions characterized by a high degree of coal solubilization and deoxygenation. The reaction is catalysed by a mixture of alkali metal carbonates and proceeds readily at 380-400°C. The first-stage reaction product appears to be susceptible to further catalytic hydrogenation at 420-460°C with gaseous hydrogen yielding 65-70% (on daf feed) of hydrogen-rich distillable oil, composed mainly of naphtha and middle oil.

The process flowsheet is presented and the comparative economics of two-stage carbon monoxide/steam-hydrogen and hydrogen-hydrogen coprocessing schemes are discussed.

INTRODUCTION

Alberta is endowed with immense reserves of subbituminous coals (1), bitumen and heavy oil (2). The concept of coprocessing coal and petroleum derived solvents is not a new one (3,4) and there is a consensus that this approach is more attractive economically than conventional coal liquefaction (5). The most attractive feature of the coprocessing concept is its potential for elimination of oil recycle which may increase the output of the installation by up to three times.

It has to be emphasized that under Alberta conditions the economics of a coprocessing plant have to be compared to a heavy oil and/or bitumen hydrocracking plant. The major advantage of coprocessing as opposed to bitumen or heavy oil hydrocracking is the low cost of coal. This has to be weighed against the increased hydrogen consumption, increased plant complexity (conversion of coal to distillate oil requires more severe conditions compared to bitumen) and the element of risk associated with implementation of the new coprocessing technology.

A factor which may have a substantial effect on the economics of coprocessing as compared to bitumen or heavy oil hydrocracking is that of purely chemical nature. It has not been firmly established whether the interaction among coal- and bitumen-derived radical intermediates leads to an increase or a reduction in oil yield or its quality.

On the other hand, it has been demonstrated that hydrocracking of bitumen in a one-stage process in the presence of small (1-3% by weight) quantities of subbituminous coal results in significant improvement in oil yield (6). Similar results can be obtained by employing chars generated from brown coals (4,7) and this furnishes a strong evidence that catalytic effects and not the chemistry of the components of the substrate play a dominant role in a one-stage bituen

* To be presented at the Fuel Division "Reactions of Coal in Novel Systems", Anaheim ACS Meeting, September 7-12, 1986

hydrocracking process with low coal concentrations. However, the objective of coprocessing is to maximize the coal concentration in the feedstock without sacrificing the distillable product yield and quality.

The two-stage process developed at Alberta Research Council is based on solubilization of high oxygen subbituminous coal in bitumen (heavy oil) using a mixture of carbon monoxide/steam at 380-400°C in presence of alkali metal catalyst, followed by catalytic hydrocracking at temperatures of 420-460°C and pressures up to 18.0 MPa.

EXPERIMENTAL

The experiments were carried out in standard batch autoclave system and in a hot charge/discharge unit (a system developed for studying two-stage liquefaction processes).

Batch Autoclave Simulated Two-Stage Studies

The batch autoclave experiments were carried out in 1 litre magnedrive autoclaves (manufactured by Autoclave Engineers Ltd.) with internal cooling coils.

The coal/bitumen slurry was charged into an autoclave at room temperature followed by pressurizing the system with carbon monoxide (5.2 MPa) or hydrogen (8.3 MPa). The autoclave was heated up to 390°C, maintained at this temperature for 30 min, and depressurized at elevated temperatures. Gas samples were analysed using a CARLE gas chromatograph. The second stage (hydrogenation) catalyst and sulfur additive were then introduced to the cold reactor which was subsequently repressurized to 8.3 MPa with hydrogen. The reactor was heated to 440°C and held at this temperature for 60 min. Subsequently, the reactor was depressurized as before, cooled to room temperature and discharged. The product work-up procedure was the same as described before (8).

Hot Charge/Discharge Unit (HCDU)

The HCDU consists of two magnetically stirred reactors of one and two litre capacity and a high pressure vessel to collect the product slurry. The first reactor operates in batch mode and the second one in a semi-continuous mode. Details regarding construction and operation of the system were given elsewhere (8). The product work-up procedure and product analyses were the same as for batch autoclave tests.

DISCUSSION

Sufficient evidence has been accumulated to show that two-stage coal liquefaction process yields better results compared to conventional single-stage processes (9).

The importance of the first (solubilization) stage in the overall liquefaction process had been ignored until it became evident that depending on the results of the solubilization, the second (hydrogenation) stage proceeds more or less efficiently. Though no results of systematic research on the solubilization-hydrogenation relationship are available, one can speculate that the mechanism of the initial disintegration of coal and the character and properties of the intermediate soluble product may have a major influence on the effectiveness of the hydrogenation step.

The influence of solubilization of low rank coals on their hydrogenation may be particularly important due to their high oxygen content and high reactivity of a major fraction of this oxygen at temperatures significantly below the hydrogenation temperature. Presence of highly reactive oxygen in the coal may

result in retrogressive reactions taking place during solubilization at higher temperatures. Therefore, for Alberta subbituminous coals a mixture of carbon monoxide/steam or hydrogen was tested in low temperature solubilization studies. The work carried out at Alberta Research Council on solubilization of indigenous subbituminous coals in CO/steam in bitumen and/or heavy oil showed that these coals are readily solubilized at a low temperature of 380-400°C with conversion 85-96% (10,11). Although the conversion was accompanied by low hydrocarbon gas generation and advanced deoxygenation for both gases tested (see Table 1), CO/steam appeared to be superior compared with hydrogen in terms of reaction kinetics measured as coal conversions at 390°C (see Table 2).

The susceptibility of the coal solubilized under mild conditions with either hydrogen or carbon monoxide/steam to further hydrogenation in presence of potassium molybdate is presented in Table 3.

Analysis of the results obtained in simulated two-stage autoclave experiments and presented in Table 3 indicates, that in terms of distillable oil yield the solubilization of coal in bitumen in presence of CO/H_2O-K_2CO_3 followed by catalytic hydrogenation yields slightly better results compared to solubilization in hydrogen and followed by catalytic hydrogenation. Furthermore, two-stage co-processing where solubilization was accomplished by action of either CO/H_2O or CO/H_2O-K_2CO_3 seems to result in somewhat lower generation of gaseous hydrocarbons compared to solubilization with hydrogen (Table 3). The coal conversion values are by far the highest (98%) for the sample solubilized using CO/H_2O-K_2CO_3.

In conclusion, on the basis of autoclave studies the two-stage CO/H_2O-K_2CO_3 - H_2 route appears to be marginally more appealing than the H_2-H_2 route in terms of product yields and conversion.

The Alberta Research Council route requires that CO be used as reducing gas in the first stage of the liquefaction process. It is noteworthy that the reforming technology for conversion of natural gas (CH_4) to either H_2 or CO is well known and in both cases is equally efficient in terms of the quantities of the reducing gas produced.

$$CH_4 + 2H_2O \rightleftharpoons CO_2 + 4H_2 \qquad (1)$$

$$CH_4 + 3CO_2 \rightleftharpoons 4CO + 2H_2O \qquad (2)$$

The conversion of methane to CO instead of H_2 is more attractive in view of the elimination of the demand for water and the potential for recycling the CO_2 produced in the first stage of the coprocessing. The disadvantage of reforming with CO_2 lies in endothermic nature of this reaction and in a need for separation of gases (namely CO, CO_2 and H_2).

The block diagram of the coprocessing plant based on the concept of CO/H_2O-K_2CO_3 - H_2 reaction is presented in Figure 1.

The process is composed of three trains: 1) distillation of bitumen and agglomeration of coal; 2) generation and separation of reaction gases; and 3) solubilization, hydrogenation, distillation and refining of volatile products.

Earlier work showed that bitumen based bridging liquid was very effective in removal of a major portion of mineral matter (particularly silica and clays) from subbituminous coals during their agglomeration (12). It is expected that deashing of coal may have a beneficial influence on liquefaction catalyst performance and resolve the problems associated with erosion of pressure let-down valves (13).

The overall mass balance of the optimized two-stage CO/H_2O-K_2CO_3 - H_2 coal/bitumen process is presented in Table 4. The soluble extract (+525°C) accounts for 12.3% of the feedstock (coal + bitumen) as compared with about 19% (see Table 3) obtained from simulated two-stage autoclave tests. The reduction in generation of extractable matter was achieved through more advanced hydrogenation compared to autoclave tests. As a result the distillable oil yield after optimization was increased to 70.1% (see Table 5) compared to 66.2% obtained in an autoclave (Table 3). Equally important, the process generates mainly light (-375°C) oil, which accounts for about 90% of total oil produced. It is expected that in a continuous operation higher yields of distillable oils can be obtained. Progress in development of an active, inexpensive and disposable catalyst should have a major impact on further improvement of the ARC process concept.

Recently completed economic feasibility studies on two-stage coal/bitumen coprocessing (14) indicate that the Alberta Research Council concept to carry out the solubilization stage in CO/steam atmosphere adds about $100 million to the cost of the coprocessing plant and this accounts for approximately 8% of total plant cost. However, when the feasibility studies were completed (early 1985) the data indicating that the CO/steam-K_2CO_3 solubilization results in higher yield of distillable oils compared to hydrogen solubilization (see Table 3) were not available. It is noteworthy that 4% higher oil yield in plant production could readily offset the additional cost associated with CO/steam solubilization. Furthermore, there are other factors (like reaction kinetics) which seem to favor CO/steam solubilization and which do not seem to be fully accounted for in the feasibility studies.

Under the circumstances it is concluded that there is a need for further verification of the effectiveness of the CO/steam-K_2CO_3 versus H_2 solubilization. It is essential to carry out continuous two-stage coal/bitumen tests in both (CO/steam-K_2CO_3 - H_2 versus H_2-H_2) modes in order to obtain more reliable yield data and conversion values for economic analysis.

ACKNOWLEDGEMENT

The authors would like to thank Mr. C. Gietz and Dr. S. Chakrabartty for reviewing the manuscript.

REFERENCES

1. Reserves of Coal, Province of Alberta, December 31, 1980, Energy Resources Conservation Board.

2. Alberta's Reserves of Crude Oil, Oil Sands, Gas, Natural Gas Liquids and Sulphur, December 31, 1983, Energy Resources Conservation Board Report No. 84-18.

3. E. Boomer and A. Saddington, Canadian Journal of Research, 1935, 12, p. 825.

4. J. Varga, J. Karolyi, Gy. Rabo, P. Steingaszner, A. Szekely and A. Zalay, Petroleum Refiner, 1957, Sept., p. 198.

5. United States Patent, 4,330,393, May 18, 1982.

6. Canadian Patent, 269,020, December 31, 1976.

7. J. Varga, J. Karolyi, P. Steingaszner, A. Zalay, R. Birthler and Gy. Rabo, Petroleum Refiner, 1960, April, p. 182.

8. B. Ignasiak, L. Lewkowicz, G. Kovacik, T. Ohuchi and M.P. du Plessis, S. Kaliaguine and A. Makay (Editors), Catalysis on the Energy Scene, 1984 Elsevier Science Publishers B.V., Amsterdam.

9. J.H. Shinn, A.J. Dahlberg, C.W. Kuehler, J.W. Rosenthal Proceedings; Ninth Annual EPRI Contractor's Conference on Coal Liquefaction, EPRI AP-3825-SR, March 1985, p. 33-1.

10. M. Gawlak, D. Carson, M. Holuszko and D. Vernon, Report No. YCLQ-7, April 1982, Alberta Research Council, Edmonton, Canada.

11. G. Kovacik, P.D. Clark, and T. Ohuchi; Studies on Coprocessing Highvale Coal and Bitumen, ENR-ARC Coal Conversion Research Program Final Reports for 1984/85, Volume I, June 27, 1985, Alberta Research Council, Edmonton, Canada.

12. W. Pawlak, J. Janiak, K. Szymocha, A. Turak and B. Ignasiak; Pipeline Agglomeration of Coal, Final Report for the Alberta/Canada Energy Resources Research Fund, July, 1984, Alberta Research Council, Edmonton, Canada.

13. G.J. Perry, Coal Corporation of Victoria - personal communication.

14. Coal/Heavy Oil Hydrogenation Plant Feasibility Study, Volume II, Cost Estimate and Financial Evaluation, April 1985, Prepared for Contar Systems Engineering Ltd. by Kilborn Kellogg Rust Ltd.

Table 1

DEOXYGENATION OF THE FEEDSTOCK (COAL AND BITUMEN) AND HYDROCARBON GAS YIELDS ON SOLUBILIZATION OF HIGHVALE COAL IN BITUMEN USING CO/STEAM OR H_2 AT 390°C

	CO/Steam	H_2
Hydrocarbon Gas Yield (C_1-C_4)[a] (%)	1.0	0.9
Deoxygenation[b] (%)	86	94

a) on daf feedstock
b) defined as:

$$1 - \frac{\text{O in (distillable + extractable) products}}{\text{O in (coal + bitumen) feedstock}} \times 100\%$$

Table 2

THE EFFECT OF RESIDENCE TIME ON CONVERSION FOR THE SOLUBILIZATION OF HIGHVALE COAL IN BITUMEN WITH CO/STEAM OR H_2 AT 390°C

Time (min)	Coal Conversion (on daf coal)	
	CO/Steam	H_2
0	58	10
15	65	34
30	85	65
60	86	68

Table 3

PRODUCT YIELDS AND COAL CONVERSIONS FROM THE TWO-STAGE CO-PROCESSING OF BITUMEN AND HIGHVALE COAL

2nd Stage Catalyst	K_2MoO_4 - CH_3SSCH_3		
1st Stage Reducing Gas	H_2	CO/H_2O	CO/H_2O-K_2CO_3
Yield[a]			
Hydrocarbon Gas (C_1-C_5)	7.2(±0.8)[b]	5.2(±0.2)	5.3[c]
Distillable Oil (IBP-525°C)	62.3(±0.9)	57.7(±0.8)	66.2(±0.7)
Soluble Extract	18.0(±0.2)	19.3(±0.9)	18.7(±0.3)
Material Balance	94.1(±3.1)	90.4(±0.2)	96.1[c]
Coal Conversion (% daf coal)	90(±1)	91(±1)	98(±0)

a) Yields are presented as % daf organic feed (bitumen + coal).
b) All data are quoted as the average values of two duplicate experiments. Figures in brackets show the spreads for the two experiments.
c) Single data point.

Table 4

OVERALL MASS BALANCE FOR THE OPTIMIZED ARC TWO-STAGE CO/H_2O-K_2CO_3 - H_2 COAL/BITUMEN PROCESS

Bitumen Coal - 2.5/1
Basis 100 kg - feed (daf)

Component	Input	Output
C_5-200°C	3.1	11.0
200-375°C	15.0	40.1
375-525°C	16.1	19.0(2)
+ 525°C	37.2	12.3
Coal	28.6	
Ash	1.5(1)	
Unconverted Coal		2.7
Residue		1.84
Water	10.26	
H_2	0.6	
CO	26.1	
CO_2		44.7
H_2S		1.5
NH_4		0.46
C_1-C_4		5.2
Catalyst	0.34	
	138.8	138.8

(1) Ash reduced to 5% by deashing.
(2) Estimate of yield after optimization.

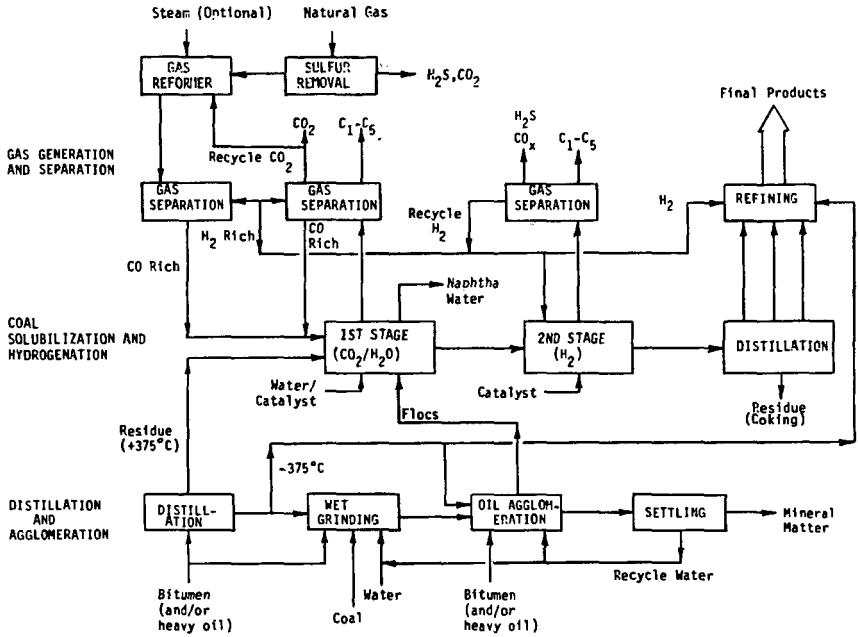

Figure 1: Block Diagram of the ARC Two-Stage CO/Steam-K_2CO_3 - H_2 Coal/Bitumen Process Concept