FLASH HYDROPYROLYSIS OF THE COAL SUPPORTING A CATALYST THROUGH SOLVENT SWELLING

Kouichi Miura, Kazuhiro Mae, Hiroshi Morikawa and Kenji Hashimoto*
Research Laboratory of Carbonaceous Resources Conversion Technology
*)Department of Chemical Engineering
Kyoto University, Kyoto 606, Japan

Key words: Catalytic Hydropyrolysis, Solvent Swelling of Coal, Hydrogen Bonding

INTRODUCTION

Flash hydropyrolysis of coal is expected as a means to recover a large amount of liquid products under rather milder conditions than direct coal liquefaction. However, total coal conversion does not increase even under 10 MPa of H_2 as compared with the pyrolysis in an inert atmosphere. This is because hydrogen does not contribute to the primary coal devolatilization but to the secondary gas phase reaction of primary tar vapors, resulting in the increase in CH_4 yield. Several attempts to increase the coal conversion by use of catalysts such as Ni, Mo, Co, and Fe have not succeeded so far. The catalysts contributed only to the secondary gas phase reaction[1,2]. On the other hand, catalysts such as Zn, Sn and Mo are reported to be very effective to increase both the coal conversion and the liquid yield significantly under slow pyrolysis conditions when the catalysts are in sulfide forms[3-5]. Since Zn, for example, is supported as $ZnCl_2$, it is transformed to ZnS during the slow pyrolysis[6]. However, $ZnCl_2$ can not be sulfided in such a short time during which the primary devolatilization is finished. Summarizing these researches suggests that two conditions must be satisfied for the catalyst to be active during the primary devolatilization of the flash hydropyrolysis of coal: the first one is that the catalyst must be activated or presulfided, and the other is that the catalyst must be in close contact with the functional groups which will be cleaved during the flash pyrolysis.

In this paper a new catalyst supporting method which satisfies the above conditions was presented. The method consists of two steps: the first step is the impregnation of $ZnCl_2$ or $SnCl_2$ from a methanol solution into the micropores of coal by utilizing the swelling of coal induced by methanol, and the second step is the sulfidation of $ZnCl_2$ or $SnCl_2$ in a gas stream containing 5 % of H_2S at room temperature. The coal supporting the catalyst was pyrolyzed by use of a high pressure Curie-point pyrolyzer to examine the validity of the presented supporting method. The coal supporting catalyst was further treated by tetralin at 100 °C to prepare the coal containing both catalyst and tetralin in the swollen coal. The coal treated by tetralin by the above procedure was also prepared. These samples were pyrolyzed to examine the roles of the catalyst and tetralin during the pyrolysis.

EXPERIMENTAL

Catalyst supporting method

An Australian brown coal, Morwell (Ultimate analysis (daf basis): C; 67.1%, H;4.9%, S+O;27.40%) was used as a raw coal. It was ground into the particles less than 70 μm in diameter and dried in vacuo at 110°C for 24 h before use. The catalyst was supported on the coal by the following method:

1. 1.0 g of coal particles were immersed in 0.9 ml of methanol dissolving 0.123 g of $ZnCl_2$ or 0.094 g of $SnCl_2$ at room temperature, and kept for 24 h, by which all the methanol including the metal chloride was incorporated into the coal by swelling it by 32% by volume.

2. Methanol was removed by the vacuum drying almost completely, remaining the metal chloride within the coal. The coal incorporating the metal chloride is still swelling. The sample of this stage is abbreviated to Zn-Swell or Sn-Swell.
3. The Zn-Swell or the Sn-Swell was treated by a N_2 stream containing 5 % of H_2S by volume for 1 h, and was purged by a pure nitrogen stream for 30 min. The sample thus prepared was abbreviated to Zn-S-Swell or Sn-S-Swell.
4. The Zn-S-Swell was further treated by tetralin at 100°C under 1 MPa of N_2, by which the sample was swollen by 35% by volume, and tetralin was incorporated within the sample. This sample was abbreviated to Zn-S-Swell-Tet .

The coal sample supporting Zn by a conventional method was also prepared for comparison. Namely, $ZnCl_2$ was supported on the coal from an aqueous $ZnCl_2$ solution, then the sample was treated by the H_2S containing gas stream as stated above. The sample prepared by this method is abbreviated to Zn-S-Impreg. The amount of catalyst (as metal) in the coal was adjusted to be around 5 wt% on the daf basis for all the samples except for the Zn-S-Swell. The coal sample swollen by tetralin by the procedure 4 was also prepared. It was abbreviated to Tet.

Flash hydropyrolysis

Figure 1 shows a schematic of the experimental setup used for the flash hydropyrolysis. The detail of the high-pressure Curie-point pyrolyzer is shown in Figure 2. The quarts reactor (12 mm OD and 6.0 mm ID) was installed in the pressure vessel made of SUS-316. The inside of the reactor and the pressure vessel were pressurized using the same gas line, then experiments up to 10 MPa were possible in a flowing gas stream.

We have designed the apparatus so that the amount of hydrogen consumed (R_H) as well as each product yield can be measured during the pyrolysis. The procedure for the pyrolysis under 5 MPa of H_2, for example, is as follows: 2 to 3 mg of sample wrapped by a pyrofoil (an Ni-Fe alloy) which has a unique Curie-point temperature was placed in the reactor, and was pressurized up to 5 MPa by a He stream. Hydrogen containing 1 % of N_2 was stored at 5 MPa in a small gas holder (5.0 ml in volume), whose volume was adjusted to purge the reactor for 20 s. The hydrogen was pushed out by the He stream into the reactor by switching the 4-way valve 1. After the sample was exposed to the hydrogen for 5 s it was heated to the Curie-point temperature by the induction coil and kept there for 10 s to be pyrolyzed rapidly. The sample was exposed to the hydrogen for 5 more seconds. The primary tar vapors were all collected by the quarts wool placed just below the sample, because the vapors were cooled immediately by the gas stream. Gaseous products and the unreacted hydrogen were all stored in a product gas holder, and were analyzed to determine the amounts of inorganic gases (N_2, H_2, CO, CO_2 and H_2O) and hydrocarbon gases (CH_4, C_2H_4, C_2H_6, C_3H_6, C_3H_8, C_4H_8, C_4H_{10}, C_5, and C_6 gaseous compounds, benzene, toluene and xylene). The yields of char and tar were measured from the weight change of the sample in the pyrofoil and the reactor. From the analysis of N_2 and H_2 we can know both the hydrogen supplied and the amount of unreacted hydrogen, then we can calculate the amount of hydrogen consumed during the pyrolysis. The pyrolysis temperature was changed from 485 to 920°C by using the pyrofoils which have different Curie-point temperatures.

RESULTS AND DISCUSSION

Physical and chemical changes of coal through the catalyst support

Figure 3 shows the change in the volumetric swelling ratio and the micro pore volume of the Zn-Swell with the increase of the catalyst loading. The micrpore volume corresponding to

0.33 to 1.0 nm in pore diameter was calculated from the CO_2 adsorption isotherm measured at 25°C. Both the swelling ratio and the micropore volume increased with the increase of Zn loading. No such a change was observed for the Zn-S-Impreg. F.T.i.r. measurement of the Zn-Swell showed the increase in the intensity associated with free -OH groups as compared with the raw coal. Methanol is known to break the hydrogen bonds in the coal to produce free -OH groups and swell the coal. Therefore, $ZnCl_2$ in the Zn-Swell is probably retained between the free -OH functional groups which formed hydrogen bondings in the raw coal, which increased the micropore volume and the swelling ratio.

We are expecting that the Zn in the Zn-S-Swell or the Sn in the Sn-S-Swell is transformed into the sulfide by the treatment with H_2S at room temperature, but we could not prove it in spite of several chemical analyses performed. However, we can safely say ZnS is formed judging from the fact that $Zn(OH)_2$ is easily transformed into ZnS by the treatment with H_2S, because $ZnCl_2$ in the Zn-Swell is well expected to be less stable than $Zn(OH)_2$.

Effect of the catalyst supporting method on the pyrolysis yield

Figure 4 shows the product yields obtained by pyrolyzing the samples prepared above at 764°C under 5 MPa of H_2. Although each yield obtained from the Zn-Swell was almost similar as that obtained from the raw coal, the total volatile matter (TVM), the tar yield and the hydrocarbon gas yield of the Zn-S-Swell and Sn-S-Swell were significantly larger than those obtained from the raw coal. Significant decreases in the water yield were found for these two samples. The amount of hydrogen consumed, R_H, of the Zn-S-Swell and Sn-S-Swell were also larger than that of the raw coal. These results indicate clearly that Zn and Sn supported utilizing the solvent swelling and sulfided by H_2S at room temperature contribute to the primary devolatilization reaction. On the other hand, in case of the Zn-S-Impreg, where Zn is sulfided but the coal is not swelling, only the tar yield and the R_H value were slightly larger than those of the raw coal. Therefore, close contact of the catalyst with the coal matrix such as -OH functional groups, which is realized through the solvent swelling, is essential in addition to the sulfidation for the catalyst to contribute the primary devolatilization reaction.

Pyrolysis of the Zn-S-Swell

To examine how the catalyst contributes to the primary devolatilization reaction, the pyrolysis yields of the Zn-S-Swell obtained at different temperatures were compared with those of the raw coal in Figure 5. Within the temperature range where both samples were pyrolyzed, the total volatile matter, the tar yield, the hydrocarbon gas yield of the Zn-S-Swell were larger than those of the raw coal. On the other hand, the yield of water of the Zn-S-Swell was smaller than that of the raw coal. Significant difference was found in the R_H value as shown in the bottom figure. The gaseous hydrogen started to be utilized from around 600°C for the Zn-S-Swell, whereas from around 700°C for the raw coal. These results indicate that the total volatile matter of the Zn-S-Swell was increased by at least two mechanisms. The first mechanism is the acceleration of the hydrogen transfer from the gas phase as clearly shown in the R_H value, and the other is the suppression of the water forming cross-linking reaction, resulting in the increase of the tar yield through the suppression of the condensation reaction.

Roles of the catalyst, hydrogen and tetralin during the primary devolatilization

We have presented a novel flash pyrolysis method in which the coal swollen by a hydrogen donor such as tetralin was pyrolyzed in an atmospheric pressure of N_2[7,8]. Both the coal

conversion and the liquid yield were increased significantly by the method. This was because hydrogen radicals were effectively transferred from/via tetralin to coal fragments, and because the water forming cross-linking reaction was suppressed by the tetralin molecules retained within micropores. In this study we have clarified that hydrogen radicals were effectively transferred from gaseous hydrogen to coal fragments via catalyst if the catalyst was supported properly. Now, we have two hydrogen radical suppliers, hydrogen and tetralin, and two hydrogen radical transfer promoters, the catalyst and tetralin. Therefore, we can expect at least five hydrogen radical transfer paths as shown in Figure 6: (1) from gaseous hydrogen, (2) from tetralin, (3) from gaseous hydrogen via catalyst, (4) from gaseous hydrogen via tetralin, and (5) from tetralin via catalyst. Then we tried to examine the relative magnitude of the five hydrogen radical transfer paths.

Figure 7 shows the pyrolysis yields and the R_H values for 4 samples, the raw coal, the Tet, the Zn-S-Swell and the Zn-S-Tet, pyrolyzed at 764°C under 5MPa of H_2 or He. Helium was used as an inert carrier gas when gaseous hydrogen was not necessary. We will examine the relative magnitude of the 5 paths based on the value of the coal conversion (char yield) first. Three experiments from the left were performed to examine the separate effect of gaseous hydrogen and tetralin. These experiments showed that tetralin and gaseous hydrogen have similar effects. The next three experiments were related to the combined effect of the hydrogen radical supplier and the radical transfer promoter. The relative magnitudes of the paths (3), (4) and (5) are judged to be (5)>(4)>(3) from these experiments. It is interesting to note that the contribution of the path (4) is larger than that of the path (3). The last experiment was performed including the catalyst, tetralin and gaseous hydrogen. From the last four experiments we can judge the path (5) is the most effective to increase the coal conversion. Summarizing the above results, we can say that the order of the relative magnitudes of the 5 paths can be written as

$$(5) > (4) > (3) > (2) \cong (1)$$

Next, we focused our attention on the product distribution and the amount of hydrogen consumed. Hydrogen radicals supplied from tetralin tended to increase the tar yield preferentially, whereas those supplied from gaseous hydrogen increased the hydrocarbon gas yield also as clearly shown in the product distributions. This suggests that the rate and/or the mechanism of the hydrogen radical transfer is different among the gaseous hydrogen and tetralin. The R_H values could be measured for only the experiments performed in H_2 atmosphere. It is clearly shown that the amount of hydrogen consumed increases for the samples supporting the catalyst and/or incorporating tetralin within the coal, indicating that the increases in the coal conversion were realized through the increase in the amount of hydrogen transfer. However, we can not discuss the contribution of tetralin now from the view point of the amount of hydrogen transferred, since we could not measure the amount of radicals transferred from/via tetralin.

CONCLUSIONS

A new catalyst supporting method which enhances the primary reaction of the flash pyrolysis of coal was presented, in which $ZnCl_2$ or $SnCl_2$ was supported from a methanol solution and the chloride was sulfided (activated) by a gas containing H_2S. The catalyst thus prepared enhanced the hydrogen radical transfer from gaseous hydrogen and from tetralin incorporated within micropores of coal, resulting in the increase of the coal conversion and the liquid yield. The relative magnitude of the hydrogen radical transfer paths during the flash pyrolysis was also examined.

REFERENCES

1. Asami, K., Tani, H., Ohtsuka, Y. and Nishiyama, Y., Proceed. of the 26th Conf. on Coal Sci. (Japan), p.220(1989).

2. Yamashita, H., Jinoka, T., Shrotri, Y., Hajima, M., Xu, W.-C. and Tomita, A., Proceed. of the 26th Conf. on Coal Sci. (Japan), p.252(1989).

3. Sulimma, A., Leonhard, P., van Heek, K.H. and Juntgen, H., *Fuel*, **65**, 1457(1986).

4. Bolton, C., Riemer, C., Snape, C.E., Derburshire, F.J. and Terrer, M.T., *Fuel*, **67**, 901 (1988).

5. Snape, C.E., Bolton, C., Dosch, R.G. and Stephens, H.P., *Energy & Fuels*, **3**, 421(1989).

6. Jolly, R., Charcosset, H., Boudou, J.P. and Guet, J.M., *Fuel Process. Techn.*, **20**, 51(1988).

7. Miura, K., Mae, K., Asaoka, S., Yoshimura, T. and Hashimoto, K., *Energy & Fuels*, **5**, 340(1991).

8. Miura, K., Mae, K., Yoshimura, T., Masuda, K. and Hashimoto, K., *Energy & Fuels*, **5**, 803(1991).

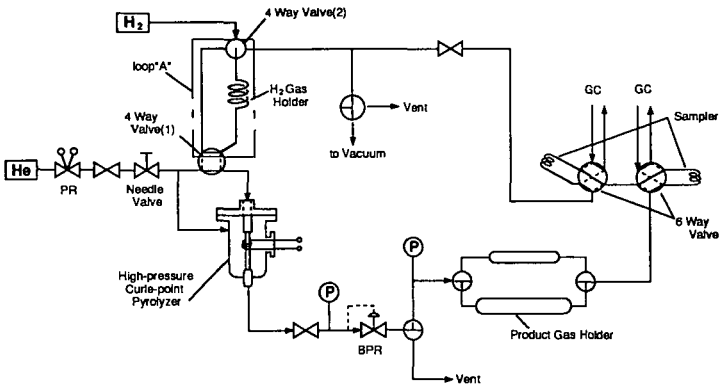

Figure 1 Schematic diagram of experimetnal apparatus

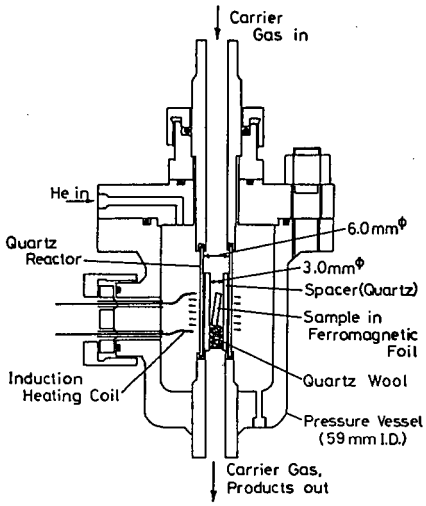

Figure 2 Detail of the high-pressure Curie-point pyrolyzer

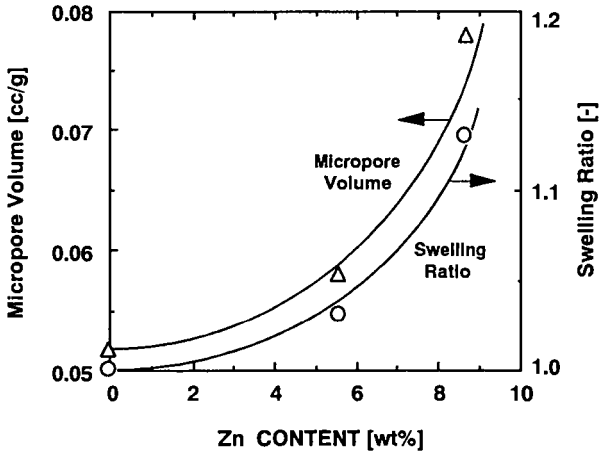

Figure 3 Change in the swelling ratio and the micropore volume with theincrease of the catalyst loading for the Zn-Swell

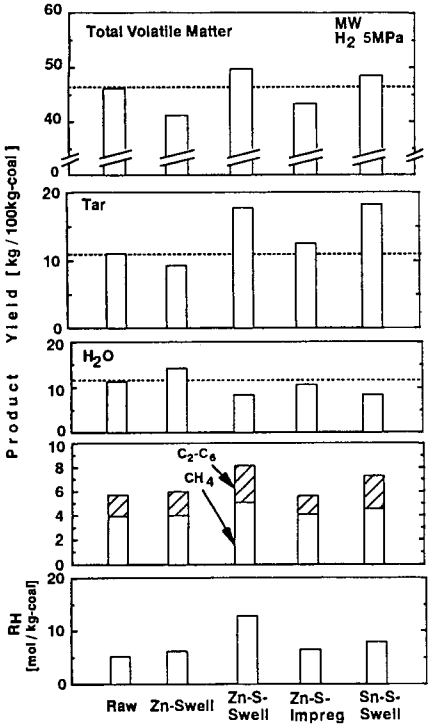

Figure 4 Effect of the catalyst supporting method on the product yield

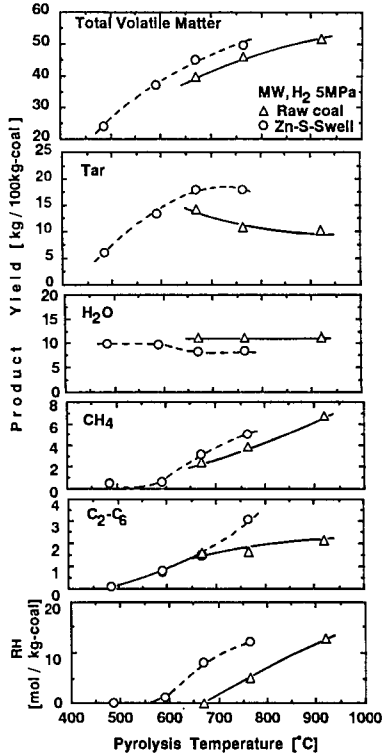

Figure 5 Comparison of the product yields between the raw coal and the Zn-S-Swell at different pyrolysis temperatures

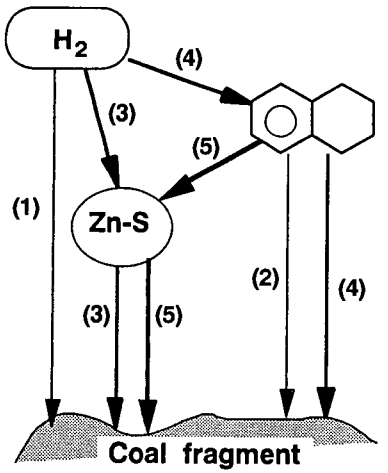

Contribution to increase the coal conv. and liquid yield

(5) > (4) > (3) > (2) ≈(1)

Figure 6 Possible hydrogen radical transfer paths during the flash pyrolysis

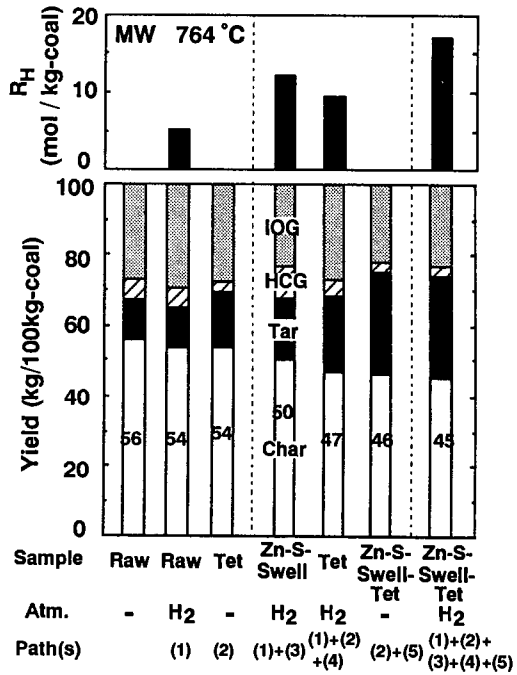

Figure 7 The product yields and the amount of hydrogen consumed for 7 experiments performed for examining relative importance of the gaseous hydrogen, tetralin and the catalyst