AN ECONOMIC COMPARISON OF PROCESSES FOR PRODUCING PIPELINE GAS (METHANE) FROM COAL

J. P. Henry, Jr. and B. M. Louks
Stanford Research Institute
Menlo Park, California 94025

An impending shortage of natural gas in the United States has led to intensive bench scale research in efforts to develop processes for preparing pipeline quality gas (methane) from coal at competitive costs. Funding of the research has been provided by the Office of Coal Research, the American Gas Association, and private organizations. Processes under development differ in the method by which steam-carbon reaction heat is added. The following list identifies the most notable processes and the method each process uses for steam-carbon reduction heat addition.

Process	Developer	Heat Addition By
Hot carbonate	M. W. Kellogg Co.	Sensible heat of molten salt
Super high pressure	Bituminous Coal Research	Combustion of pure oxygen
C.S.G.	Consolidation Coal	In-situ exothermic chemical reaction
Continuous Steam-Iron	Fuel Gas Associates	In-situ exothermic chemical reaction
Hygas	Institute of Gas Technology	Electric power and in-situ exothermic chemical reaction

The processes under development are reviewed and their relative economics explained by a presentation of the thermochemistry of reactions utilized in preparing methane from coal.

HYDROGEN: A KEY TO THE ECONOMICS OF PIPELINE GAS FROM COAL

C. L. Tsaros

Institute of Gas Technology
Chicago, Illinois 60616

INTRODUCTION

The objective in manufacturing supplemental pipeline gas is to produce high-heating-value gas that is completely interchangeable with natural gas — essentially methane. Large amounts of low-heating-value constituents like hydrogen or carbon monoxide or inert diluents like carbon dioxide or nitrogen cannot be tolerated.

BASIC PROCESS CONSIDERATIONS

The basic problem in making methane from coal is to raise the H_2/C ratio. A typical bituminous coal may contain 75% carbon and 5% hydrogen, a H_2/C mole ratio of 0.4:1; the same ratio for methane is 2:1. To achieve this ratio it is necessary to either add hydrogen or reject carbon. The most efficient way is to add hydrogen. The hydrogen in the coal can supply about 25-30% of the required hydrogen, but the bulk must come by the decomposition of water, the only economical source of the huge quantities needed for supplemental gas.

There are two basic methods for adding hydrogen to coal: In the first, or indirect, method, coal reacts (by Reaction 1) with steam to form synthesis gas — mainly hydrogen and carbon monoxide.

$$C + H_2O \rightarrow CO + H_2 \qquad (1)$$

This reaction is highly endothermic and requires combustion of carbon with oxygen, or some other heat source. The CO and H_2 then react catalytically to form methane:

$$CO + 3H_2 \rightarrow CH_4 + H_2O \qquad (2)$$

Prior to methanation, part of the CO is made to react with more water to increase the H_2/CO ratio.

$$CO + H_2O \rightarrow H_2 + CO_2 \qquad (3)$$

In the second, or direct, method, methane is formed directly by the destructive hydrogenation of coal by the reaction:

$$C + 2H_2 \rightarrow CH_4 \qquad (4)$$

The indirect method is inherently less efficient because in the process water is decomposed in Reactions 1 and 3. A portion of the hydrogen product is then converted back to water by Reaction 2. Reaction 2 is more exothermic than Reaction 4. Since Reaction 2 is carried out at a much lower temperature than Reaction 1, this heat is not available. Decomposition of an increased amount of water also consumes more energy in the indirect than in the direct method.

The major effort at IGT has been in hydrogasification, now called the HYGAS Process, because of the originally high oxygen consumption and costs of the synthesis-gas methanation route.

PROCESS ECONOMICS

Process economic studies have been carried out in conjunction with the development program at IGT for pipeline gas from coal. A number of different process designs have been prepared in which the price of gas was reduced from the level of $1.00 to $0.50/million Btu. The most important effects on the cost of product gas have resulted from the way hydrogen is generated or utilized in the hydrogasifier; hydrogen has been the key factor in reducing the price of gas.

The original studies cover a period of about 10 years and have somewhat different process and cost bases. In this paper the results of seven different pipeline gas plant economic evaluations are compared. An attempt has been made to adjust these to a common and more current basis for capital and operating costs. Coal costs are assumed to be uniform at 16.1¢/million Btu. The plant size is 250 billion Btu of product-gas heating value. The seven studies are –

1. Synthesis-gas methanation

2. Hydrogasification of coal by a hydrogen/char ratio of 300% of stoichiometric

3. Partial hydrogasification with 50% of the stoichiometric hydrogen rate

4. Hydrogasification with steam-hydrogen mixtures

5. Hydrogen by the steam-iron process

6. Hydrogen from synthesis gas generated by electrothermal gasification

7. Hydrogasification with synthesis gas

The data presented in this paper have all been derived from the earlier studies to which the cited references refer. Because of the adjustments in capacity and cost index made to get a better basis for comparison, the costs differ somewhat from the originals. Sulfur by-product credit has not been included because of different sulfur contents for some of the coals used.

Several simple flow diagrams have been prepared to illustrate the different process schemes. Table 1 gives pertinent data; Figures 1 and 2 show the cost of gas in relation to different hydrogen schemes and net production rates. To permit comparison, gas prices shown are based on the same utility-type accounting procedure. The basic assumptions are 1) 20-year straight-line depreciation, 2) 7% return on rate base (end-of-year undepreciated book value plus working capital), 3) 5% interest on debt, 4) 65:35 debt/equity ratio, and 5) 48% Federal income tax. This results in an average annual return on outstanding equity for the cases shown ranging from 9.3 to 9.5%.

Return on equity is calculated as follows: Debt retirement is 5% of the initial debt. Annual depreciation exceeds annual debt retirement by a constant amount, which is called the surplus. This surplus is used to reduce the outstanding equity, which results in a linearly decreasing outstanding equity. To calculate average percent return on equity, the 20-year average net income is divided by the 20-year average outstanding equity.

Interest rates are presently high; even with some reduction in the future, they will probably be higher than 5%. To maintain attractive return on equity at higher interest, the return on rate base will also have to be raised. For a second set of gas prices, we have raised financial factors to a 7.5% interest rate and a 10.1-10.2% average annual return on equity. The income tax rate and debt/equity ratio are as before. This requires a rate of return of 9% on the rate base, from which both debt and equity return are paid.

Table 1. SUMMARY OF PIPELINE GAS FROM COAL PROCESS (250 Billion Btu/Day High-Btu Gas at 1000 psig, 90% Annual Plant Operating Factor, Gas Prices Calculated by A.G.A. Accounting Procedure, Economics of Different Processes Estimated on a Comparable Basis)

			Partial Hydrogasification, Hydrogen From Spent Char				
				Steam-Hydrogen Gas Mixtures to Hydrogasifier			
Case Number	1	2	3	4	5	6	7
Process	Synthesis-gas methanation	Complete hydrogasification 300% stoich hydrogen	50% Stoich hydrogen	Hydrogen by steam-oxygen	Hydrogen by steam-iron process	Electrothermal Gasification Hydrogen	Electrothermal Gasification Synthesis Gas[d]
Product Gas, Btu/SCF	916	934	939	947	941	941	937
Coal, tons/day (Equivalent to 12,400 Btu/lb)	20,262	18,609	16,625	17,790	17,790	17,790	17,790
H_2 + CO Generation							
Source	Texaco steam-oxygen gasification				Fluid-bed steam-iron process	Fluid-bed steam-electrothermal process	
10^6 SCF/Day	985	470	414	295	295	308	308
Moles/hr	108,406	51,730	45,602	32,495	32,495	33,863	33,863
Oxygen, tons/day	12,500	6,020	5,440	4,109	--	--	--
Purchased Electric Power, kW	--	--		--	--	356,000[c]	356,000[c]
Overall Efficiency, %	49.9	54.3	61	66.2	72.6	61.7	65.8
By-products[a]							
Char Plus Fines, tons/day	--	--	--	1,809	468	4,161	4,557
Low-Btu Gas, 10^6 Btu/day	--	--	--	--	61	--	--
Capital Investment							
Installed Equipment Cost, $\$10^6$	200	218	186	136	99	98	87
Total Investment Cost, $\$10^6$[b]	235-241	256-262	218-223	161-165	118-121	118-121	105-108
20-yr Avg Price of Gas							
Standard Factors, ¢/10^6 Btu	87.0	89.3	75.8	65.1	54.7	61.7	56.1
New Factors, ¢/10^6 Btu	91.2	93.8	79.7	68.0	56.9	63.9	58.0

[a] Sulfur not included because of different coals.

[b] Includes working capital, which increases with higher gas price due to new financial factors.

[c] In calculating efficiency, fuel to generate purchased power subtracted from by-product char.

[d] 258 X 10^6 Btu/day.

Depending on the investment level, the effect of the higher financial factors is to raise gas price from 1.9¢ to 4.5¢/million Btu for the investment range covered.

Indirect Methanation – Synthesis-Gas Methanation (Case 1)

The first process, methanation of synthesis gas generated by Texaco steam-oxygen suspension gasification of coal,[1] is shown in Figure 3. Gas made this way is expensive because of the high oxygen requirement and the low thermal efficiency. For a 250 billion Btu/day plant, 12,500 tons/day of oxygen are needed for generation of 985 million SCF/day of hydrogen equivalent ($CO + H_2$). Investment is $240 million; product gas costs approximately 90¢/million Btu, depending on financial factors.

Direct Hydrogenation

The rest of the studies are based on the direct hydrogenation of coal char to methane discussed above. They represent a historical and process economic study of major steps in hydrogen usage that have occurred in the development of the HYGAS Process.

Use of Excess Hydrogen (Case 2)

The first economic evaluation for hydrogasification was based on pilot plant data in which a large excess of hydrogen – 300% of the stoichiometric hydrogen/char ratio – is fed to the hydrogasifier[2] in a fluidized-bed reactor (Figure 4). Nearly complete gasification is achieved. A separate coal stream flows to the gasifier where synthesis gas for hydrogen production is generated. The coal pretreatment step, a low-temperature carbonization process, is more severe than the simpler air oxidation used in IGT's later work. More hydrogen and other volatile matter is lost in the low-temperature carbonization, requiring more net hydrogen input.

With excess hydrogen, the hydrogasifier effluent contains CH_4/H_2 in a 0.32:1 ratio, which is upgraded to a ratio of 8.7:1 by low-temperature separation. This processing step contributes about 15¢/million Btu to the price of gas. Gas price and investment are slightly higher than for synthesis-gas methanation, even though the overall efficiency is higher, because of the higher investment. Even though the net hydrogen rate is less than half that for synthesis-gas methanation, thus cutting oxygen consumption in half, the large excess of hydrogen used in the hydrogasifier requires a compensating expense in cryogenic separation and prepurification.

Partial Hydrogasification With Less Than Stoichiometric Hydrogen (Case 3)

Further development of hydrogasification showed that it is advantageous to hydrogasify only the more reactive fractions of the coal and to use the less reactive residuel char for hydrogen manufacture. By the use of a moving bed, a solids downflow-gas upflow reactor, and a hydrogen/char ratio only 50% of the stoichiometric, a high-Btu gas is produced in the hydrogasifier.[3] In Case 3 the hydrogasifier temperature ranged from 1350°F at the top of the bed to 1600°F at the bottom. The same char pretreatment method was used. A lower temperature and a reduced hydrogen/char feed ratio result in a high-Btu gas, eliminating the need for low-temperature separation. Partial conversion of the char reduces the net hydrogen input because more coal must pass through the reactor, yielding more volatile matter. Compared to Case 2 the investment is reduced 15% and the efficiency is raised to 60%. Savings in equipment and higher efficiency combine to lower gas price by 13¢-14¢/million Btu.

Figure 5 gives a general flow sheet for pipeline gas by partial hydrogasification with spent hydrogasifier char as the basis for hydrogen manufacture. Steam is needed in all cases, but alternative methods employ air, oxygen, or electricity as a basic input.

Figure 6 gives the basic scheme for hydrogen generation by the Texaco-type steam oxygen suspension gasification of spent char. This method is used in four (Cases 1-4) of the seven process economic studies. In all cases costs are based on the system used in Reference 5. As discussed below, electricity can also be used as a heat source. To avoid a repetitive flow sheet, both oxygen and electricity are shown as alternatives; however, the use of electricity is not a part of the Texaco Process.

Hydrogasification With Steam-Hydrogen Mixture (Figures 5 and 6)

An important process and economic development was the successful use of steam in the hydrogasifier. In the current concept, steam and hydrogen in approximately equal amounts are fed to a high-temperature fluidized bed where the above reactions (1, 3, and 4) occur. Since the steam-carbon reaction (1) is strongly endothermic and the hydrogen-carbon reaction (4) strongly exothermic, heat effects tend to balance, and there is not the problem of heat removal that exists when only Reaction 4 occurs. Steam acts as a moderator since, as the temperature rises because of Reaction 4, the rate of Reaction 1 increases. Steam decomposition generates hydrogen in situ, thus reducing the size of the hydrogen section and lowering the price of gas. The hydrogen feed/char ratio is reduced to about 33% of the stoichiometric value. When steam is used, the hydrogasifier effluent contains more carbon monoxide and requires more subsequent methanation than when hydrogen alone is used. About two-thirds of the total methane is made in the hydrogasifier compared to over 90% for Cases 2 and 3. However, the cost of increased methanation is more than compensated for by the other cost reductions resulting from the use of steam.

As shown in Table 1, four of the processes utilize steam with the hydrogen-rich gas. In all these cases the hydrogasifier consists of two stages: a low-temperature first stage of 1300°-1500°F to obtain a high methane yield from the volatile matter in the coal and a high-temperature fluidized-bed second stage of 1700°-1800°F to produce methane and effect the steam-coal reaction. All four of the process designs are based on the same coal rate, coal preparation, and hydrogasification steps derived from the design in Reference 6. Major differences are in the hydrogen section.

The economic effect of introducing steam into the hydrogasifier is shown by Cases 3 and 4: Investment is lowered by 25%. In both cases hydrogen is derived from synthesis gas made by Texaco-type steam-oxygen gasification of spent char. When part of the hydrogen is made in the hydrogasifier, the price of gas is shown to be reduced by 10¢-11¢/million Btu; net hydrogen is reduced by 30%. Case 4 is derived from Reference 5 with modifications, as discussed above, based on Reference 6. The 10¢ differential is confirmed by other studies.

Hydrogen by the Steam-Iron Process (Case 5) (Fuel Gas Associates)

The expense of using oxygen to make hydrogen has stimulated interest in alternative methods. The continuous steam-iron process, shown in Figure 7, offers potential for significant cost reduction. It involved the transfer of the oxygen in water to a stream of iron plus reduced iron oxide that flows between oxidizer and reductor. A stream of hydrogen and unreacted steam flows from the oxidizer directly to the hydrogasifier. Spent hydrogasifier char reacts with steam and air to make a producer gas that regenerates the iron oxide. Since this gas is not part of the product, air can replace oxygen. Power for air compression and other plant requirements is provided by an expansion turbine powered by spent reductor gas. Savings in investment contribute most to the 10¢ reduction in gas price from 65¢ to 55¢/million Btu. The hydrogen rate is the same, but the costs of hydrogen and onsite power generation are greatly reduced. As part of the pipeline gas from coal plant, hydrogen by the steam-iron process costs about 20¢/1000 CF compared to 29¢ for hydrogen by steam-oxygen gasification.

Hydrogen by the Electrothermal Process (Case 6)

Another alternative to steam-oxygen gasification is the electrothermal process (Figure 6). Here resistance heating of a fluidized bed of char operating at 1800°-1900°F supplies the heat for the steam-carbon reaction, and the steam serves both as a reactant and a fluidizing medium. Compression of high-purity oxygen is eliminated, and the reducing gas is not diluted by CO_2 from combustion. Power must be relatively low cost. Our economics are based on a purchased power cost of 3 mills/kWhr. There is enough spent char to supply needed electricity by either a magnetohydrodynamic or a conventional steam turbine system. Such a system would be adjacent to and integrated with the pipeline gas plant and could benefit from the use of hot char transferred directly as fuel to a fluidized boiler. Hydrogen by this method costs more than by the steam-iron process. The price of pipeline gas is very sensitive to the cost of power. A change of 1 mill/kWhr will change the gas price by 3.3¢/million Btu.

Hydrogasification With Synthesis Gas[4] (Case 7)

Feeding raw, hot synthesis gas instead of hydrogen can substantially reduce the price of pipeline gas. We have shown the economic effect as applied to the electrothermal process (Figure 8). The synthesis gas is essentially CO and H_2. As H_2 is consumed in the hydrogasifier, CO reacts with the steam present to from more H_2. Because of the lower hydrogen partial pressure, a larger reactor column is needed, but its cost is largely balanced by the elimination of the hydrogen preheat system necessary when cold hydrogen is used. Major cost reductions are in the elimination of the CO shift and purification sections needed to make high-purity hydrogen and in savings in offsite equipment. Gas price is reduced by 5.5¢-6¢/million Btu.

SUMMARY

Important process changes have occurred in the development of the HYGAS Process, resulting in much improved economics. The investment for a 250 billion Btu/day plant has been reduced from over $250 million to $120 million. Plant efficiency has risen from 50% to 70%. When computed on a comparable basis, these changes have resulted in reductions in the price of gas from approximately 90¢ to 55¢/million Btu. These process changes are summarized as follows:

Process Change	Price Reduction, ¢/10^6 Btu
Partial Hydrogasification With 50% vs. 300% of Stoichiometric H_2/Char Ratio (Case 3)	14
Use of Steam in the Hydrogasifier (Case 4)	10-11
Use of Steam-Iron Process for H_2 (Case 5)	10-11
Hydrogasification With Electrothermally Generated Synthesis Gas	9-10

Hydrogasification with electrothermally generated synthesis gas and 0.3¢/kWhr power (Case 6) reduces pipeline-gas price by 9¢-10¢/million Btu from Case 4, with synthesis gas instead of hydrogen accounting for about 5.5¢-6¢. Gas price is then about the same as with hydrogen by the steam-iron process.

The basic IGT scheme as presently conceived consists of three stages of coal conversion as shown in Figure 8: 1) a low-temperature (1300°-1500°F) first hydrogenation stage, either free fall or upflow, for conversion of the volatile matter; 2) a fluidized-bed second hydrogenation stage where steam and synthesis gas react at 1700°-1850°F to produce methane, CO, and H_2; and 3) a third-stage fluidized-bed

gasifier at 1800°-1900°F where spent char is converted to synthesis gas containing methane by electricity and/or oxygen.

ACKNOWLEDGMENT

The work reported herein is under the cosponsorship of the American Gas Association and the U.S. Department of the Interior, Office of Coal Research. Permission of the sponsors to publish this paper is greatly appreciated.

REFERENCES CITED

1. Heffner, W. H. et al., "Pipeline Gas From Bituminous Coal via Suspension Gasification and Catalytic Synthesis of Methane," Study CE-60-207. New York: M. W. Kellogg Co., 1960 (Unpublished report to American Gas Association).

2. Heffner, W. H. et al., "Pipeline Gas From Bituminous Coal via Hydrogasification," Study CE-61-215. New York: M. W. Kellogg Co., 1961 (Unpublished report to American Gas Association).

3. Khan, A. R., Feldkirchner, H. L. and Joyce, T. J., "Techno-Economic Evaluations of Hydrogasification of Coal and Char." Chicago: Institute of Gas Technology, 1964 (Unpublished report to American Gas Association).

4. Knabel, S. J. and Tsaros, C. L., "Process Design and Cost Estimate for a 258 Billion Btu/Day Pipeline Gas Plant – Hydrogasification Using Synthesis Gas Generated by Electrothermal Gasification of Spent Char," R&D Rept. No. 22, Interim Rept. No. 3. Washington, D.C.: Office of Coal Research, 1967.

5. Tsaros, C. L., Knabel, S. J. and Sheridan, L. A., "Process Design and Cost Estimate for Production of 265 Million SCF/Day of Pipeline Gas by the Hydrogasification of Bituminous Coal," R&D Rept. No. 22, Interim Rept. No. 1. Washington, D.C.: Office of Coal Research, 1965.

6. Tsaros, C. L., Knabel, S. J. and Sheridan, L. A., "Process Design and Cost Estimate for Production of 266 Million SCF/Day of Pipeline Gas by the Hydrogasification of Bituminous Coal – Hydrogen by the Steam-Iron Process," R&D Rept. No. 22, Interim Rept. No. 2. Washington, D.C.: Office of Coal Research, 1966.

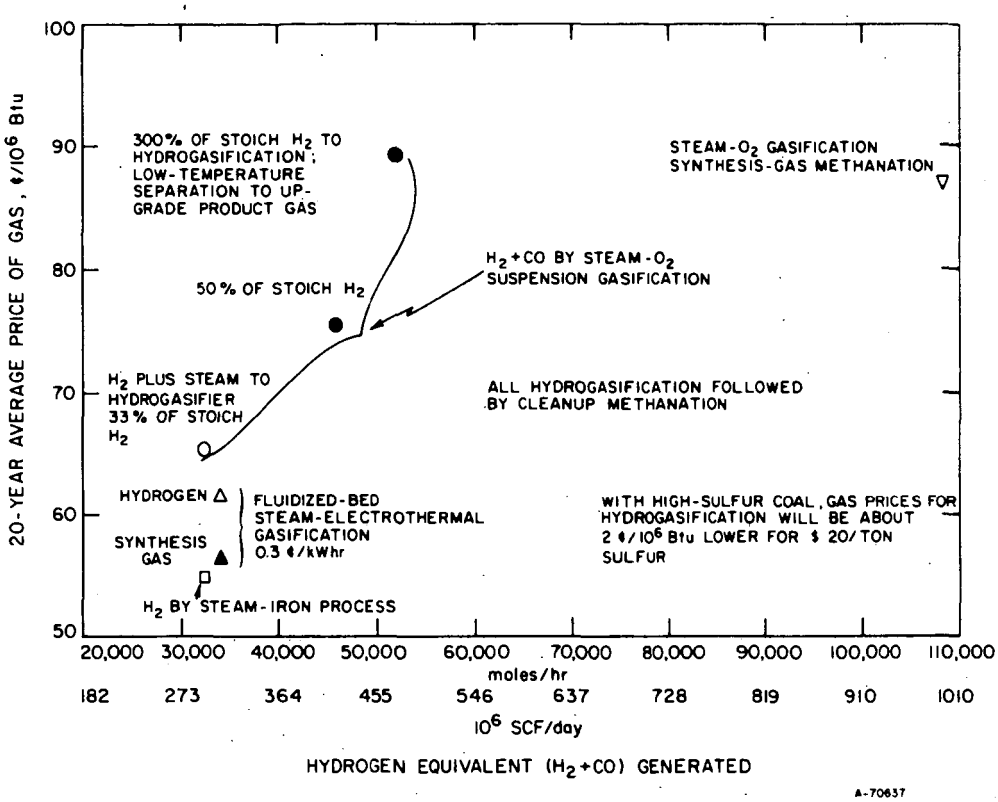

Figure 1. EFFECT OF H_2 PLUS CO GENERATION RATE AND METHOD ON PRICE OF PIPELINE GAS FROM COAL ESTIMATED ON A COMPARABLE BASIS (Initial Debt – 65%, Interest at 5%, Return on Rate Base – 7%, Federal Income Tax – 48%, Coal Cost – 16.1¢/10^6 Btu)

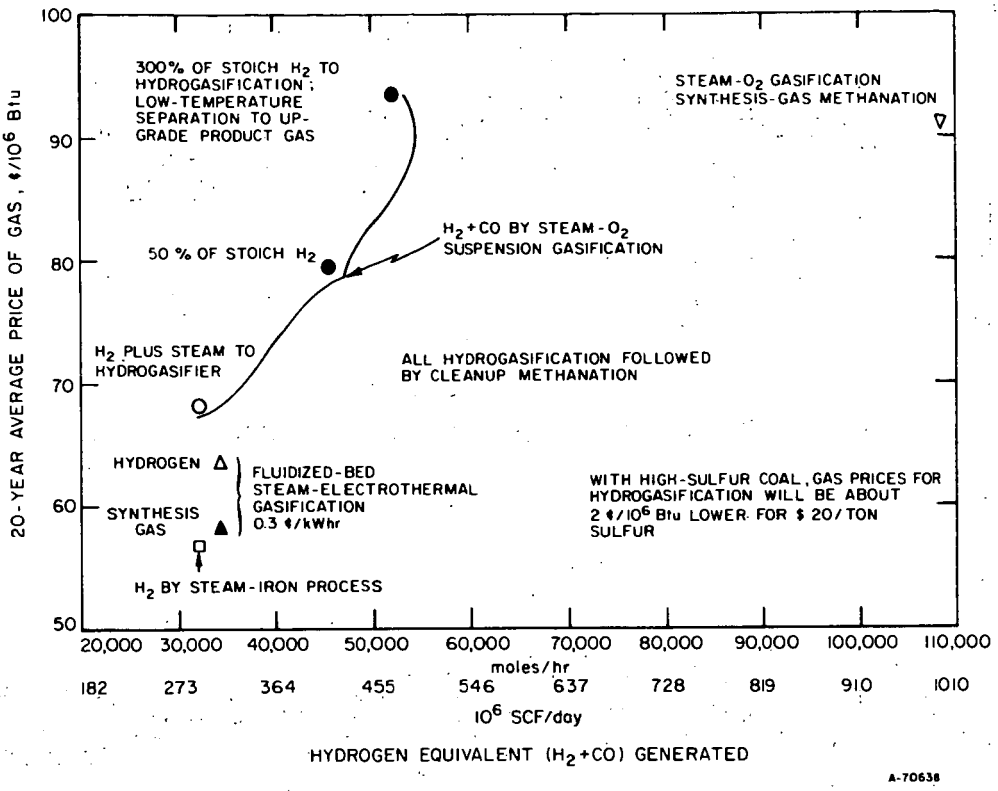

Figure 2. EFFECT OF H_2 PLUS CO GENERATION RATE AND METHOD ON PRICE OF PIPELINE GAS FROM COAL ON A COMPARABLE BASIS (Initial Debt – 65%, Interest at 7.5%, Return on Rate Base – 9%, Federal Income Tax – 48%, Coal Cost – 16.1¢/10^6 Btu)

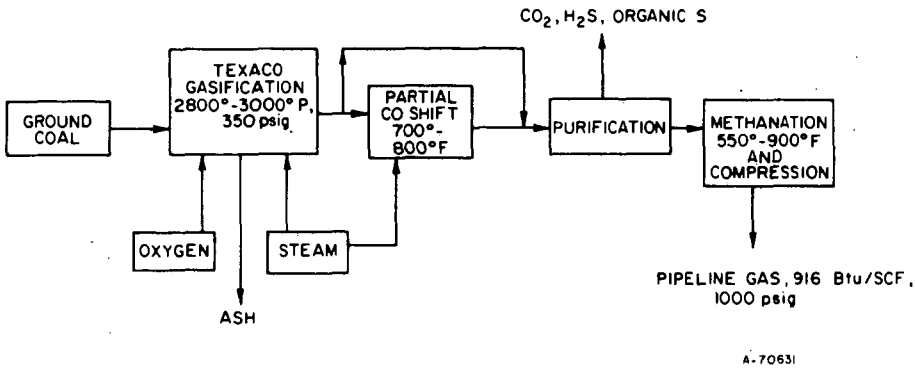

Figure 3. PIPELINE GAS FROM COAL BY METHANATION OF SYNTHESIS GAS

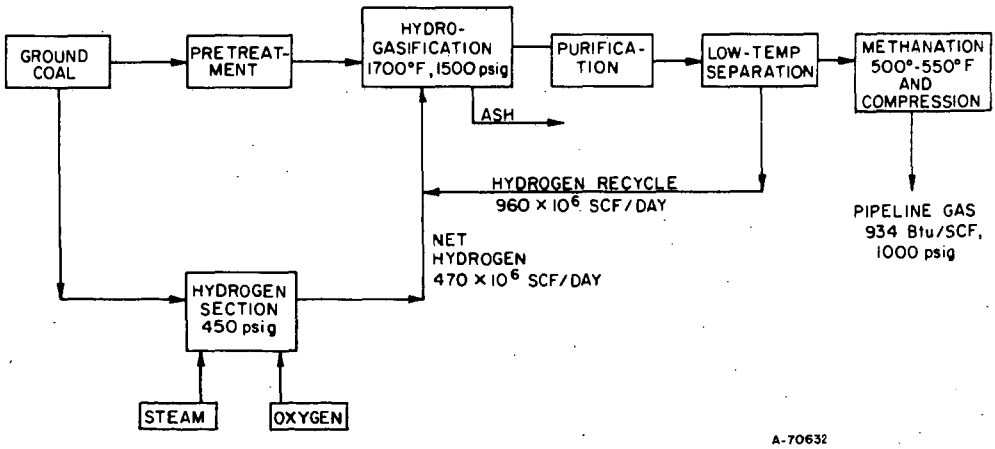

Figure 4. PIPELINE GAS FROM COAL BY HYDROGASIFICATION WITH EXCESS HYDROGEN (300% of Stoichiometric)

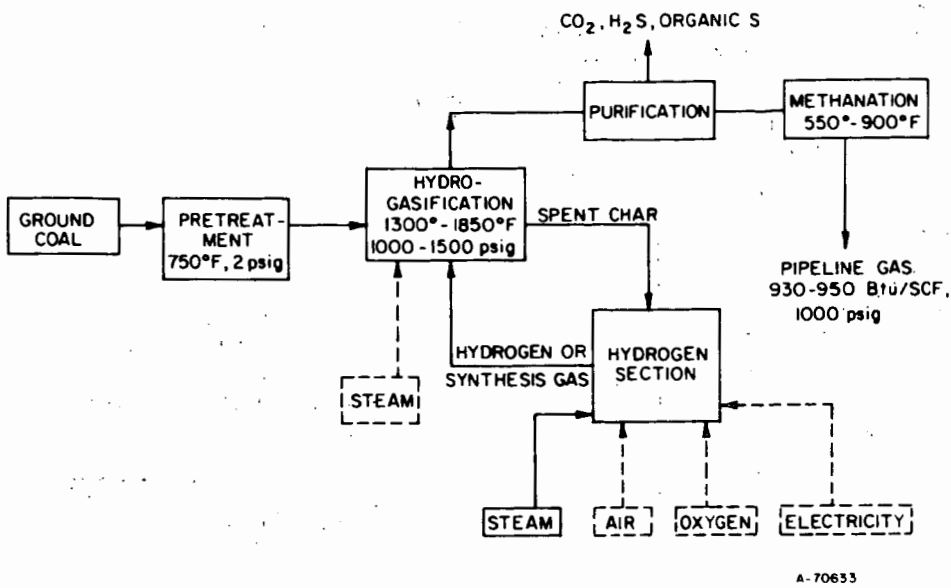

Figure 5. PIPELINE GAS FROM COAL BY HYDROGASIFICATION WITH LESS THAN STOICHIOMETRIC HYDROGEN; HYDROGEN MANUFACTURE BASED ON SPENT CHAR WITH AIR, OXYGEN, AND ELECTRICITY AS ALTERNATIVES

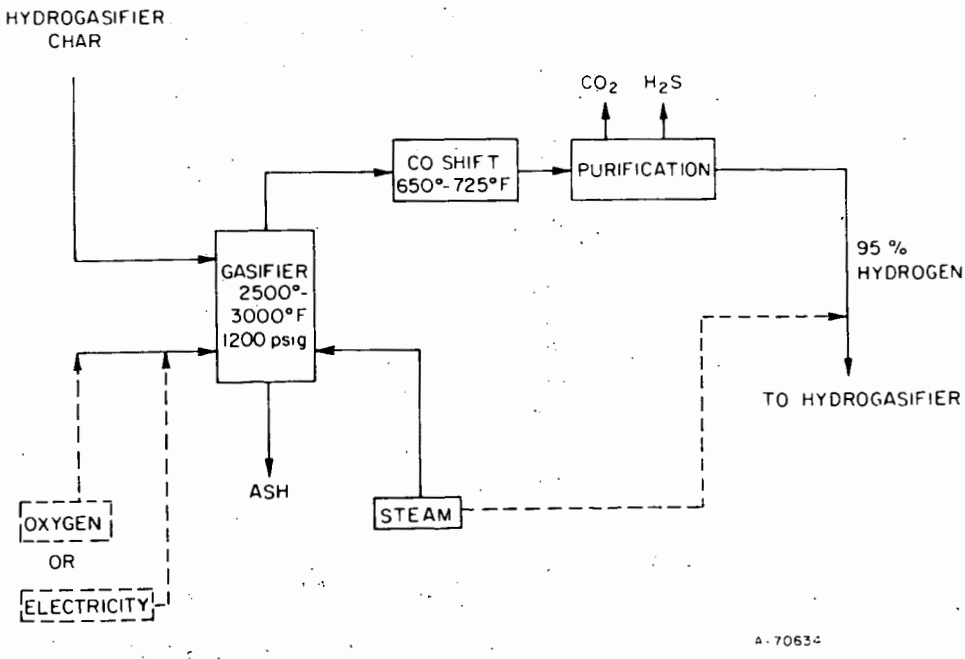

Figure 6. HYDROGEN GENERATION BY STEAM-OXYGEN OR STEAM-ELECTROTHERMAL GASIFICATION OF HYDROGASIFIER CHAR

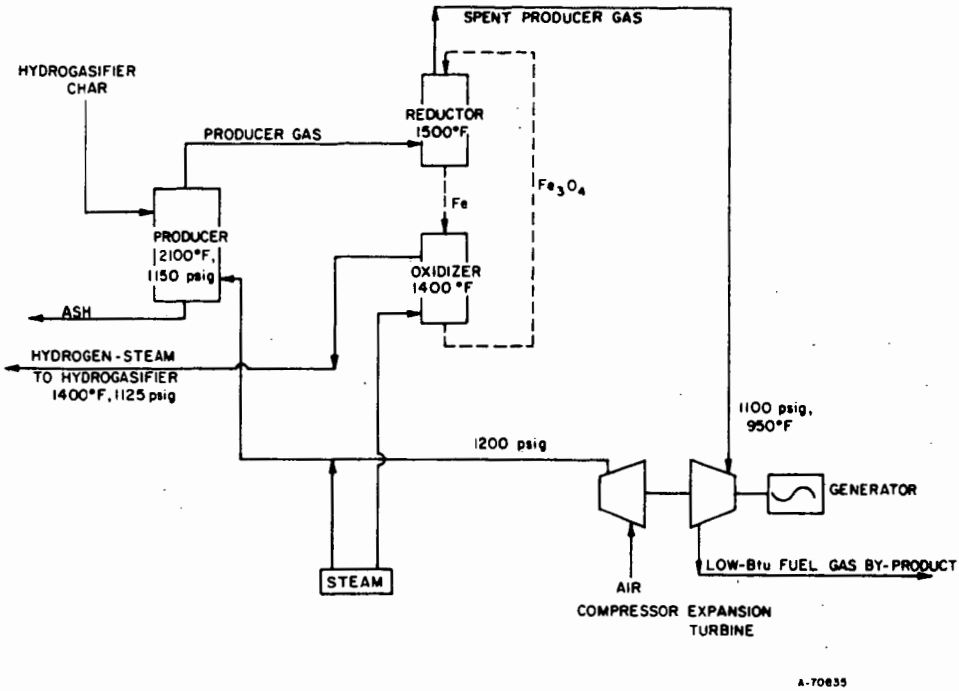

Figure 7. HYDROGEN GENERATION BY THE STEAM-IRON PROCESS BASED ON HYDROGASIFIER CHAR

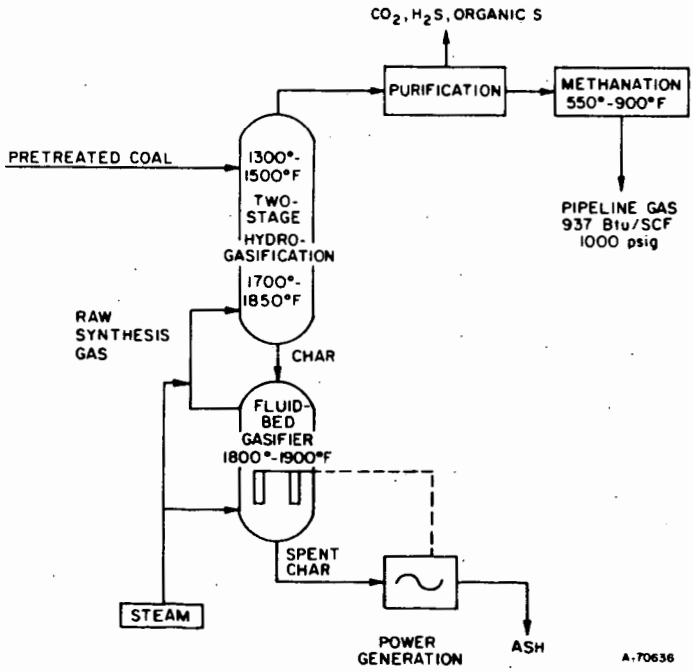

Figure 8. HYDROGASIFICATION WITH SYNTHESIS GAS

OPTIMIZATION OF FIXED BED WATER-GAS SHIFT CONVERTER FOR PRODUCTION OF PIPELINE GAS

C. Y. Wen and H. N. Kim

Department of Chemical Engineering
West Virginia University
Morgantown, West Virginia

1. INTRODUCTION

With the growing shortage of natural gas, development of process for the production of high BTU gas from coal becomes more attractive, and is now under extensive investigations, most of which are sponsored by the Office of Coal Research, Department of the Interior. The overall system for production of the pipeline gas consists of several unit processes such as gasification, water-gas shift conversion, gas purification and methanation. In the present study, the water-gas shift conversion process of a large commercial scale is optimized in connection with the primary gasification and methanation processes. The objective is to search the most economical scheme for shift conversion by which the effluent gas from the gasifier can be processed to achieve a proper hydrogen-to-carbon monoxide ratio for methanation at a later stage. Conditions and compositions of raw gas vary depending on the different primary gasification processes from which it emerges. Among the various gas compositions obtainable, two cases are selected as shown in Table 1. These selections will meet the following requirements imposed on methanation: (1) production rate of pipeline gas is 250×10^9 BTU/day; (2) heating value of pipeline gas is more than 900 BTU/SCF.

2. REACTION KINETICS

A. Rate Equations

The stoichiometric relation of water-gas shift reaction is expressed by

$$CO + H_2O = CO_2 + H_2 \tag{1}$$

In addition to the above reaction, thermodynamically it is possible that several other side reactions may take place among the components of CO, H_2O, H_2, CO_2, CH_4 and other hydrocarbons. These reactions involve the methane formation and the carbon deposition. Presently however the well developed commercial iron-chromium-oxide catalyst is employed under the suitable steam to gas ratio which is obtained based on equilibrium considerations, showing a satisfactory selectivity in most water-gas shift conversion processes. In this study therefore only reaction (1) will be of primary importance.

Among the different types of water-gas shift rate equations proposed so far, the first order equation of Laupichler [11], Mars [13], the second order equation of Moe [15], and the exponential form of equation of Bohlbro and others [4] are noteworthy. The recent paper of Ruthven[18] reviewed the experimental results obtained by previous investigators, and concluded that the pseudo first order rate equation is quite adequate in most cases. This equation seems to have more flexibility than others since it includes the pore diffusion effect of catalyst, which is particularly important at high temperatures.

Table 1. Flow Rates and Compositions of Feed and Product Gases

Low CO Case

	Feed		Product (dry basis)	
	lb-mole/hr	mole %	lb-mole/hr	mole %
CO	9209.0	11.78	6446.3	10.43
H_2O	19155.8	24.50	--	--
H_2	17817.4	22.79	20580.1	33.31
CO_2	11567.3	14.79	14330.0	23.19
CH_4	19721.0	25.22	19721.0	31.91
N_2	716.3	0.92	716.3	1.16
Total	78186.8	100.00	61793.7	100.00

Inlet Temperature: 1000°F Pressure: 1100 psia

High CO Case

	Feed		Product (dry basis)	
	lb-mole/hr	mole %	lb-mole/hr	mole %
CO	31850.6	35.32	12421.7	12.69
H_2O	11767.5	13.04	--	--
H_2	19220.3	21.30	38649.2	39.49
CO_2	12002.9	13.30	31431.8	32.11
CH_4	14591.7	16.17	14591.7	14.91
N_2	784.5	0.87	784.5	0.80
Total	90217.5	100.00	97878.9	100.00

Inlet Temperature: 1700°F Pressure: 1050 psia

In the present study, the pseudo first order rate equation is consistently used regardless of operating conditions. However, the result obtained from the second order equation of Girdler[7] is also presented for comparison. The two types of rate equations are summarized as follows:

(a). Pseudo first order rate equation

$$-\frac{dp}{dt} = k_o\ (p-p_e) \tag{2}$$

or in an integrated form

$$-\ln\ (1-X/X_e) = k_o t = k_{a_p}/S_v \tag{3}$$

The value of K_{a_p} is obtained from intrinsic catalyst activity, k_s as follows:

$$k_s = 1079\ \exp(-27300/RT) \tag{4}$$

$$k_{v_1} = \rho_p S_p\ RT\ k_s \tag{5}$$

$$D_{e_1} = 0.069\ (T/673)^{3/2} \tag{6}$$

$$\Phi_1 = 0.5 d_p\ (k_{v_1}/D_{e_1})^{1/2} \tag{7}$$

$$\eta_1 = \frac{3}{\Phi_1}\left(\frac{1}{\tanh\Phi_1} - \frac{1}{\Phi_1}\right) \tag{8}$$

$$k_{a_1} = 492\ k_{v_1}\ \eta_1\ \ (1-\varepsilon)/T \tag{9}$$

$$k_{a_p} = k_{a_1}[(P/14.7)^{0.35} - 1/\Phi_1]/(1-1/\Phi_1) \tag{10}$$

(b). Second order rate equation

$$r'_{CO} = k(C_{CO}\ C_{H_2O} - C_{H_2}\ C_{CO_2}/K_y) \tag{11}$$

$$k = \exp(15.95 - 17500/RT) \tag{12}$$

B. Mass and Heat Transfer Within Catalyst Bed

Since the water-gas shift reaction is comparatively slow and moderately exothermic, the difference in temperature and concentration between bulk phase of gas and catalyst surface is not expected to be very great. This can be shown numerically as follows. The temperature difference may be estimated by:

$$T_c - T_b = r_s \Delta H/(h_p \pi d_p^2) \tag{13}$$

where h_p is the heat transfer coefficient between the particle surface and bulk phase, and can be calculated from [23]

$$J_H = (N_{Pr})^{2/3}\ h_p/(C_p G) = 0.989\ (d_p G/\mu)^{-0.41} \tag{14}$$

The maximum temperature difference will result from the maximum reaction rate. The calculation based on the value, r_{CO} = 6 lb-mole CO/(hr cu. ft. cat), G = 7000 lb/(hr.sq. ft.) shows approximately $(T_c - T_b) \approx 3°F$. Such a negligibly small temperature difference was also reported earlier [11], [13]. The temperature gradient within a catalyst pellet can be calculated by the following heat balance equation, assuming an uniform reaction rate in the catalyst.

$$\frac{d^2T}{dr^2} + \frac{2}{r}\frac{dT}{dr} = \frac{r_{CO}}{k_e}\Delta H \tag{15}$$

where k_e, the effective thermal conductivity may be calculated from

$$\frac{1}{k_e} = \frac{1}{(1-\zeta)k_c + \zeta k_g} \tag{16}$$

Solution of the above equation using proper boundary condition is

$$T = T_c + \frac{1}{6}\left(-\frac{r_{CO}}{k_e}\Delta H\right)\left[\left(\frac{d_p}{2}\right)^2 - r^2\right] \tag{17}$$

Again r_{CO} = 6 lb-mole/ (hr.cu.ft.cat.) is used for the calculation of temperature difference within the pellet, yielding that $(T-T_c)|_{r=o} < 4°F$.

In a similar manner, the concentration difference between the bulk phase and the surface of the catalyst is approximated by

$$C_c - C_b = r_s/(k_f \pi d_p^2) \tag{18}$$

where k_f is the fluid-particle mass transfer coefficient in the bed, and may be evaluated from [9]

$$\frac{J_M}{(1-\varepsilon)^{0.2}} = 1.40\left[\frac{d_p G}{\mu(1-\varepsilon)}\right]^{-0.41} \tag{19}$$

The numerical calculation indicates that the maximum difference in concentration corresponds to only 2% of bulk phase concentration.

In summary, it may be safely assumed that the differences in temperature and concentration between the bulk phase and the catalyst surface are negligibly small.

3. PERFORMANCE EQUATIONS

A. Flow Model for Fixed Bed Reactor

Flow patterns of fluid in a fixed bed reactor are describable by the dispersed-plug flow model or compartment-in-series model. The required condition may be specified as follows [12]

$$D_a/vL < 0.01 \tag{20}$$

Noting the relation $D_a/vL = (D_a/vd)(d/L)$

and using the experimental results of Levenspiel and Bischoff [12],

$$D_a/vd \approx 0.5 \tag{21}$$

Equation (20) is equivalent to $d/L < 0.02$ (22)

In this study the characteristic length d is the same as the unit compartment length which is selected as 1 in. Therefore, it is seen from equation (22) that if L is larger than 5 ft. the requirement is satisfied.

B. Performance Equations for Reactor Simulation

Material balances for each component around n-th compartment are given as follows:

$$F_i^n = F_i^{n-1} + V_c^n r_{CO} \qquad i = 1,2,\cdots,6 \tag{23}$$

r_{CO} is negative for i=1,2, positive for i=3, 4, zero for i=5,6, where F_1^n, F_2^n, F_3^n, F_4^n, F_5^n, F_6^n are the molar flow rate of CO, H_2O, H_2, CO_2, CH_4, and N_2 at the exit of the n-th compartment, respectively; V_c^n is the catalyst volume per unit compartment. Energy balance around the n-th compartment under adiabatic conditions may also be expressed as:

$$-(T^{n-1}-T_o)\sum_{i=1}^{6} F_i^{n-1} C_{p_{im}} + (T^n - T_o)\sum_{i=1}^{6} F_i^n C_{p_{im}} = -\Delta H_{T_o} V_c^n r_{CO} \tag{24}$$

where $C_{p_{im}} = \int_{T_o}^{T} C_{p_i}\, dT/(T - T_o)$, $\Delta H_{T_o} = -17698$ BTU/lb-mole

The pressure effect on heat capacities may be considered negligible even at 1000 psig except for steam.

Pressure drop through the fixed bed reactor is calculated using Ergun's equation [8]:

$$\Delta P = \frac{150(1-\varepsilon)\,\mu/(d_p G) + 1.75}{\left(\frac{\varepsilon^3}{1-\varepsilon}\right)\left(\frac{d_p}{C_L}\right)\left(\frac{\rho g}{G^2}\right)} \tag{25}$$

C. Design Equation for Heat Exchanger

Considering the change of film coefficient and scaling problem, it is assumed that approximately 50% of water entering the tubes in heat

exchangers is evaporated to generate steam. Then the heat balance can be writted as:

$$Q = W_s C_p \ (T_2 - T_1) \qquad \text{for shell side} \qquad (26)$$

$$= W_T \ [C'_p \ (t_2 - t_1) + 0.5\lambda \ ] \qquad \text{for tube side} \qquad (27)$$

where T_1, t_2 are the outlet temperatures, and T_2, t_1, are the inlet temperatures of shell side and tube side, respectively. The shell side heat transfer coefficient is calculated from:

$$(h_o D_o / k_g) = 0.36 \ (D_o G_s / \mu)^{0.55} \ (C_p \mu / k_g)^{1/3} \qquad (28)$$

The pressure drop in the shell side is estimated by the following equation [10]:

$$\Delta P = f_s G_s^2 D_s L_H / (5.22 \times 10^{10} \ D_o s \ B) \qquad (29)$$

where

$$f_s = 0.01185 \ (D_o G_s / \mu)^{-0.1876} \qquad (30)$$

The tube side heat transfer coefficient for the case without phase change* may be computed by:

$$(h_i D_i / k_w) = 0.027 \ (D_i G_i / \mu_w)^{0.8} (C'_p \mu_w / k_w)^{1/3} \ (\mu_w / \mu_o)^{0.14} \qquad (31)$$

Since a complete optimal design of heat exchangers is rather involved which is not called for in this study, a simplified procedure is adapted. This procedure involves the determination of an optimum heat transfer coefficient for the heat exchanger. Clearly the increasing mass velocity of gases will have a favorable effect on heat transfer coefficient but will result in a larger pressure drop. An optimum heat transfer coefficient therefore is calculated based on the highest velocity within the allowable pressure drop of 3 psi.

4. ECONOMIC INFORMATION

A. Equipment Cost

Reactor Shell Cost: The thickness of the reactor wall, T_h is computed from [1]

$$T_h = P \ R' \ / (S_r E' - 0.6P) \qquad (32)$$

and weight of reactor W_R which includes the top and bottom blank is calculated by

$$W_R = \frac{\pi}{4} \rho_m \ [\{(D + \frac{T_h}{6})^2 - D^2\} L + \frac{F_d^2 \ T_h}{6} \ ] \qquad (33)$$

*See appendix for the case of phase change.

Then the reactor cost becomes $E_R = C_R I_f W_R$ (34)

Cost of catalyst supporting trays : $E_S = 0.216\ I_f N(D+5)^{3.13}$ (35)

Control Valve Cost: Average values of $8000 per valve for a large single reactor and $4000 for small parallel reactors are used.

Heat Exchanger Cost [17]: $E_H = C_y I_f\ [850\ (A_T/50)^{0.562}]$ (36)

Pump Cost: The following equations are used to estimate the cost of pumps [6] [14] associated with heat exchangers to deliver cooling water

$$E_p = 684\ B_p^{0.467} \tag{37}$$

where

$$B_p = q\ \rho_w\ \Delta h/(246{,}800\ E_f) \tag{38}$$

B. Cost of Direct Material and Utility

Catalyst Cost: $E_c = I_c V_c$ (39)

Steam Cost: Although the cost of steam depends largely upon its source and manufacturer, a value of 60 cents per thousand pounds is primarily used.

Thus $E_{ST} = (W_{ST}/1000)\ (8200)\ (0.6)$ (40)

Cooling Water Cost: $0.12 per thousand gallon is used for treated water.

Electricity Cost: 11 mil per kw-hr is used

C. Calculation of Revenue Requirement

In order to optimize the process, formulation of objective function is necessary. The objective function is developed based on the annual cost. The accounting procedures is "Utility Gas Production General Accounting Procedure" which is formulated by the American Gas Association and adopted by the Office of Coal Research. The procedure estimates the annual revenue requirement under the following conditions [21]:

Debt-equity structure	65% debt (1/20th retired annually)
Return on-rate base	7%
Federal income tax rate	48%
Interest on debt	5%
Depreciation, 20 year straight line	5%
State and local taxes and insurance	3%

The revenue requirement is composed of three factors: operating costs, return-on-rate base; and federal income taxes. In current optimization raw material cost is not considered and one man per shift is assumed for operating labor. The steam cost is calculated separately from the revenue requirement, because of the difficulty as well as the importance of steam cost estimation in optimization.

5. OPTIMIZATION

A. Process Description

The block diagram of the system for optimization is shown in Figure 1. Since the temperature of the raw gas from gasifier is usually much higher than the operating temperature for shift conversion, cooling by waste heat boiler is necessary before going into the reactor. The gas after cooled to a proper temperature is then introduced to the reactor in which the mole ratio of carbon monoxide to hydrogen is adjusted about 1/3. Therefore, for any fixed inlet gas composition, there is always a required conversion of carbon monoxide. Before the gas enters the reactor, a certain amount of steam is added to this stream. The additional steam also brings the steam to gas ratio high enough so that carbon deposition on catalyst will not take place. Determination of the proper steam to gas ratio is not a simple problem, however, because it requires the knowledge of many factors including the reaction kinetics of carbon with gases. Furthermore, the amount of steam introduced would greatly affect not only the steam cost but also reaction rate, equilibrium conversion, etc. and the optimum operating conditions.

The required conversion of carbon monoxide can be achieved in the reactor by one throughput. However, because of the cost of steam and the heavy duty required in the product gas cooler, it will be more advantageous to by-pass a portion of the feed, and mix it with the product gas that has been converted in excess in the reactor. The conversion in the reactor is adjusted to achieve the required conversion upon mixing. It is observed that in order to meet the required conversion by this scheme, the conversion in the reactor has to approach closely to the equilibrium conversion. The temperature of product gas after the shift conversion is approximately 900°F, or lower if this product is mixed with the by-passed gas. Again, it is required to cool the outlet gas before purification. The outlet temperature of product gas cooler should be decided based on the performance of purifier, but in the present study this temperature is fixed at 460°F for convenience.

B. Adiabatic Reactor

The adiabatic operation can be represented on the conversion-temperature plot. Figure 2 shows the equilibrium curves for different values of steam to gas ratio based on the feed composition of the low CO case. On the same figure are shown the adiabatic operating lines

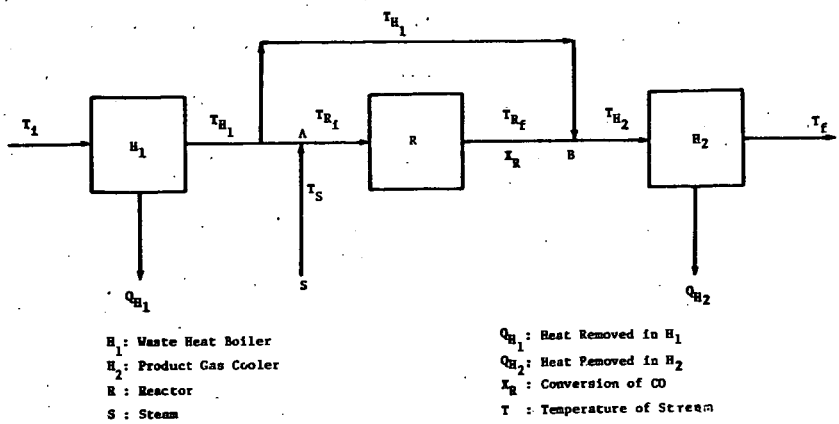

Figure 1 Block Diagram of Water-Gas Shift Conversion System Considered for Optimization

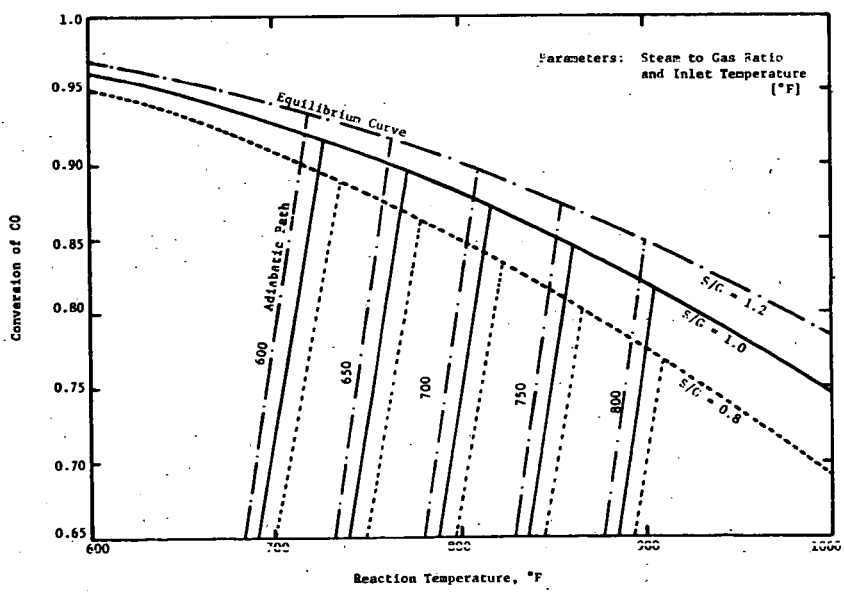

Figure 2 Reaction Paths in Adiabatic Reactor for Low CO Case

which represent the energy balance relationship starting from the given inlet temperatures. The intersection of adiabatic path with equilibrium curve is adiabatic-equilibrium point, indicating the maximum attainable conversion and temperature in an adiabatic operation. The inlet gas temperature to reactor is one of the decision variables, having an allowable range between 600°F to 800°F. The maximum allowable operating temperature is selected as 900°F, because experimentally it has been shown that undesirable phenomena such as catalyst sintering and carbon deposition could take place above this temperature.

The optimization of reactor part is to find the reaction conditions at which the total annual cost is minimized. However, since the entire system to be optimized includes heat exchangers also, the optimum conditions cannot be decided from the reactor study alone. In other words, the reactor is regarded as one stage while the entire process constitutes a multi-stage process. Therefore, at each stage the optimal decisions are obtained for every admissible value of state variables. In this study the quantities to be decided for the optimization of the reactor are: the inlet gas temperature, the conversion (or by-pass fraction), and the diameter of reactor. If we select the temperature of gas as the state variable and the remaining quantities as the decision variables, then the reactor optimization will follow the procedure of searching for the optimum conversion and optimum diameter for every admissible value of the inlet gas temperature.

It can be proven that for a given reactor volume, a smaller diameter reactor weighs less than that of a larger diameter reactor because of the thickness of the reactor wall. Therefore, once the volume of the reactor is determined from the conversion, the smallest diameter will be chosen as the optimum diameter which offers the allowable pressure drop through the reactor. This reduces the number of decision variables and simplifies the calculation.

The procedure of reactor optimization is as follows:

1. The adiabatic equilibrium conversion and temperature are determined for each of the assumed inlet temperatures with given feed composition.
2. An initial trial value of diameter is estimated approximately from the required conversion, the average temperature and the pressure of the gas stream.
3. Starting from the point near the equilibrium conversion, the annual cost for the reactor part is calculated at each point along the adiabatic line by a suitable interval of conversion. In this procedure, search methods such as Fibonacci Search or Golden Section Search may be used for higher efficiency, but in the present study a constant interval of 0.05 is taken for simplicity. Meanwhile, at each conversion the correct diameter of the reactor satisfying the pressure drop limitation is calculated by iterations. It is noted that the determination of conversion in the reactor fixes automatically the by-pass fraction of the feed gas.
4. Once the optimum conversion and the correct value of the diameter is obtained for a single reactor, the optimum number of reactors in

parallel can be decided readily, based on the optimum space velocity already determined.

After the heat exchanges and reactor are optimized individually for every admissible inlet and outlet gas temperatures, the results can be combined to locate the optimum temperatures for the overall system. To accomplish this, first it is necessary to decide the steam temperature, T_s, in Figure 1. Apparently, the increasing value of T_{H_1} favors the cost of H_1 but affects that of H_2 adversely if T_{R_f} is fixed. These two opposite tendencies can be combined to show that the highest possible T_{H_1} and consequently the lowest possible T_S should be selected for an economical operation. In this study T_S is selected as the saturation temperature of steam at the operating pressure. Once the temperature of steam is fixed, the remaining procedure is straightforward. For every value of T_{R_i} the value of T_{H_1} is calculated by material and energy balances around point A. Since the corresponding value of T_{R_f} is already obtained by an optimum X_R in the reactor, similar material and energy balances around point B yield the value of T_{H_2}. Hence, all the necessary inlet and outlet temperatures for estimating the overall costs are determined.

C. Cold-Quenching Reactor

The adiabatic system provides a simple and economical process when the concentration of carbon monoixde in the feed gas stream is low. However, when the CO concentration is high the rate of heat evolution is so high that the removal of heat from the system becomes necessary in order to keep the reaction temperature within the desirable range. Hence, from the point of temperature control, more flexible cold-quenching system must be employed. In water-gas shift converter cold-quenching is achieved by injecting a suitable amount of cold water and vaporizing it in the quenching zone of the reactor. Since steam is a reactant and is required in excess, the water-quenching accomplishes dual effects: temperature reduction and steam supply. Figure 3 (a) shows the present system of cold-quenching water-gas shift conversion process. In the first reaction zone the reaction progresses under an adiabatic condition. When the reaction has achieved a certain extent of conversion, the quenching is performed in the quenching zone by a pressurized low temperature cooling water which is completely vaporized and mixed with the reacting gas stream before entering the next reaction zone. Care must be exercized for the design and operation of quenching zone to assure complete vaporization of water in the quenching zone, otherwise the unvaporized water will drastically contaminate the catalyst in the subsequent reaction zone. After quenching, the low temperature gas continues to react in the second reaction zone. The alternate quenching and reaction continue until the desired conversion is achieved. The cooling process in the product gas cooler which follows the reactor is the same as that of the adiabatic system.

Since the cold-quenching system consists of a series of adiabatic beds, the typical optimization technique for multi-stage process, namely dynamic programming is used. In this study, a three-stage system is selected based on the results of simulation. The backward dynamic program is expressed by the well known Bellman's principle of optimzality [2] as: "Whatever the initial state and decisions are, the remaining decisions must constitute an optimal policy with regard to the state resulting from the first decision." In contrast to the backward dynamic program algorithm, a forward dynamic program algorithm [3] has been proposed as: "Whatever the ensuing state and decisions are, the preceding decisions must constitute an optimal policy with regard to the state existing before the last decision." The selection of backward or forward algorithm will depend on the type of problem as well as the given boundary conditions.

In Figure 3(a) the initial state (X^I, T^I), and final state (X^F, T^F) are fixed as described earlier, but all other values at intermediate stages must be determined by optimization. Now from the relationship between the value of X_3^f and the amount of gas by-passed, it is possible to confine the system of optimization to the region surrounded by the dotted line in Figure 3(a). Figure 3(b) shows the modified system to be optimized with X_1^i given.

Each stage except stage 1 consists of one quenching zone and one reaction zone, and has two state variables X, T, and two decision variables W and ΔX. For example, if we use backward algorithm in stage 3, for any given value of (X_3^i, T_3^i), we can find the optimal decision W_3 and ΔX_3 such that the total cost is minimized. In stage 1 although no quenching water W, is used, the principle of computational procedure is still the same.

Generally, a backward approach has been used more frequently, and can be also applied to the present problem. However, in this study the forward concept is used because firstly, the problem is of initial condition type, and secondly, the equilibrium constraint existing at the end of each stage is helpful for taking the admissible ranges of state variables.

The general recurrance formula in N-stage process is

$$F_N(\overline{Y}_N) = \underset{\{\overline{O}_N\}}{\text{Min}} \left[G_N(\overline{Y}_N, \overline{O}_N) + F_N(\overline{Y}_N)\right] \tag{40}$$

where

$\overline{Y}_N$ and $\overline{O}_N$ are the state and decision vectors at the N-th stage

G_N and F_N are the objective and minimum objective function, respectively.

Then the following functional equation can be written for each stage.

First stage, $$F_1(X_1^f, T_1^f) = \underset{\{\Delta X_1\}}{\text{Min}} [G_1 (X_1^f, T_1^f, \Delta X_1)] \quad (41)$$

Second stage, $$F_2(X_2^f, T_2^f) = \underset{\{\Delta X_2, W_2\}}{\text{Min}} [G_2(X_2^f, T_2^f, \Delta X_2, W_2) + F_1(X_1^f, T_1^f)] \quad (42)$$

Third stage, $$F_3(X_3^f, T_3^f) = \underset{\{\Delta X_3, W_3\}}{\text{Min}} [G_3(X_3^f, T_3^f, \Delta X_3, W_3) + F_2(X_2^f, T_2^f)] \quad (43)$$

Based on the above equations and using the material and energy balance relations, the optimization is performed starting from the first stage. Although the system is different and involves the multi-dimensionality problem, the basic principle for optimization at each stage is quite similar to that of the adiabatic system. In each case the amount of quenching water is adjusted within the capacity of quenching zone, and the intervals of variables are properly selected based on the sensitivity of objective function and on the computing time. A linear interpolation approximation is applied to connect the stages. The computational procedure is as follows:

1. At the exit of the first stage, the admissible ranges of X_1^f and T_1^f are found. In doing this, the restricted range of operating temperature, $550°F \leq T \leq 900°F$, and the equilibrium temperature-conversion relationship are considered. Then within the range the netwise two-dimensional lattice points of (X_1^f, T_1^f) are formulated.

2. The corresponding T_1^i for each of the lattice point is calculated using material and energy balance relationship in the stage. The size of reactor is evaluated, the annual cost, G_1, is then obtained and tabulated.

3. Similarly, at the exit of the second stage the admissible values of (X_2^f, T_2^f) are found.

4. (X_2^i, T_2^i) 's are calculated for different values of $(\Delta X_2, W_2)$, and the evaluated G_2's are listed.

5. Interpolation is performed between (X_1^f, T_1^f) and (X_2^i, T_2^i), and the minimum values of (G_1+G_2) obtained are listed for every value of (X_2^f, T_2^f).

6. By a similar computation at the third stage, all the values of (X_3^i, T_3^i) and G_3 are also obtained from the admissible values of (X_3^f, T_3^f) and $(\Delta X_3, W_3)$.

7. Interpolation is performed between (X_2^f, T_2^f) and (X_3^i, T_3^i). Hence, the total objective function $(G_1+G_2+G_3)$ is obtained for every value of (X_3^f, T_3^f), from which the optimum result is found.

Again the reactor part and heat exchanger part can be combined by the similar procedure shown in adiabatic system.

6. RESULTS

Adiabatic system: Figure 4 shows the reaction rate profiles along the reactor and Figure 5 illustrates the annual cost .vs. reactor inlet temperature for the low CO case. The optimum operating conditions and corresponding costs are listed in Tables 2 and 3 for both the low CO case and the high CO case.

Cold-quenching system: The reaction rate profile for the low CO case, and reaction paths for both cases are shown in Figures 6 to 8, respectively; the optimum operating conditions and costs are listed in Tables 4 to 6.

7. DISCUSSION

A. Effect of Steam to Gas Ratio on Optimization of Adiabatic Water-Gas Shift Conversion System

As already indicated, the steam to gas ratio is one of the most important factors in the optimization of water-gas shift conversion system. However, its determination is not straightforward. To see how this factor affects the performance of the reaction and the optimization, different values of steam to gas ratio were employed for the low CO case in the adiabatic system. Figure 9 shows the reaction rate profiles along the reactor height with different steam to gas ratios of 0.8, 1.0, and 1.2. The operating conditions and costs are listed in Table 7, indicating that the major difference in cost comes from the variation in the amount of steam although there is also a considerable change in other costs.

B. Effect of Pressure on the Reactor Performance

Since little is known about the reaction kinetics above 450 psig, the validity of rate equation used in this study is uncertain above this pressure. Besides, most of the commercial plants are operated around 400 psig or less, due to the experimental fact that the activity of iron-chromium-oxide catalyst increases rapidly with pressure in the low pressure range but above 400 psig, the effect of pressure becomes insignificant.

Two additional operating pressures of 300 psig and 600 psig are selected to study the effect of pressure on the adiabatic reactor operation. Figure 10 shows the profiles of reaction rate and Table 8 lists the operating conditions and costs. These results indicate that at high pressure although the reaction rate is increased and consequently the volume of reactor is decreased, the cost of reactor becomes higher because of the reactor wall thickness. Therefore, in general, there is no reason to operate the reaction at a high pressure unless other parts of the gasification processes are conducted under high pressures.

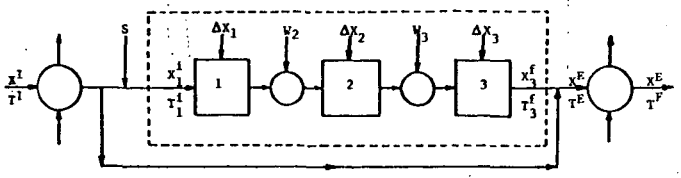

Figure 3(a)

X: Conversion of CO
T: Temperature
S: Steam
W: Quenching Water

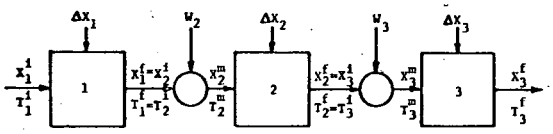

Figure 3(b)

Figure 3 Block Diagram of Cold-Quenching Water-Gas Shift Conversion System Considered for Optimization

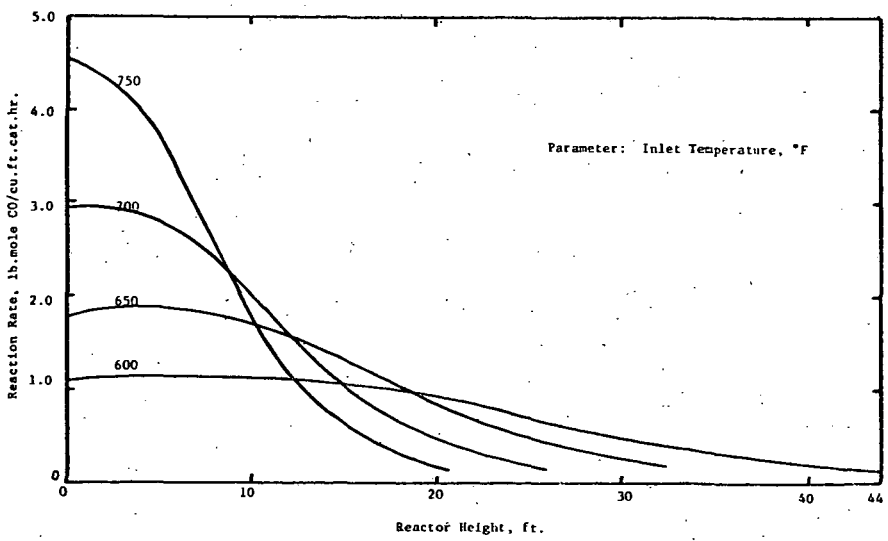

Figure 4 Reaction Rate Profiles in Adiabatic Reactor for Low CO Case

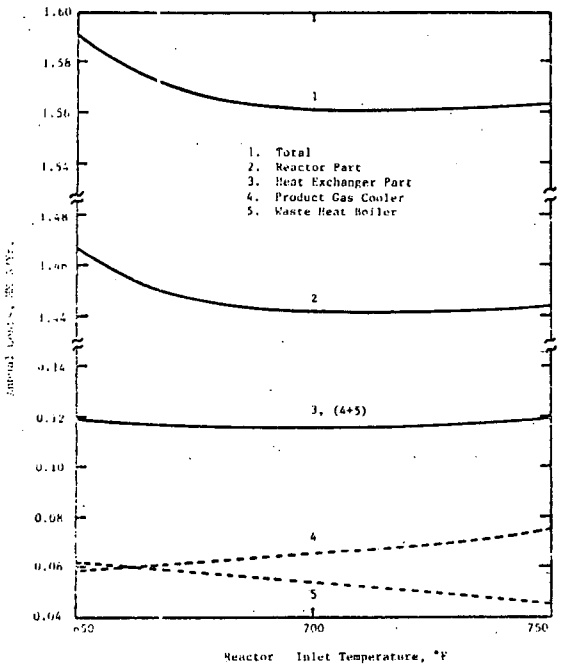

Figure 5 Total Annual Cost in Terms of Reactor Inlet Temperature Indicating 700°F is Optimum for Low CO Case

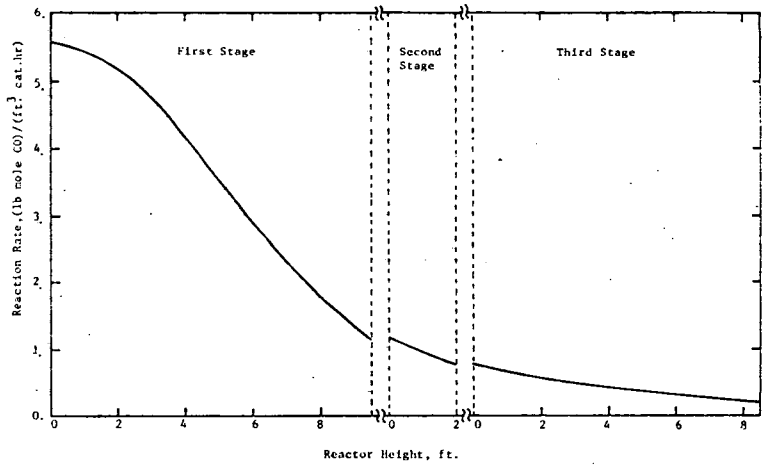

Figure 6 Reaction Rate Profile Under Optimum Condition in Cold-Quenching Reactor for Low CO Case

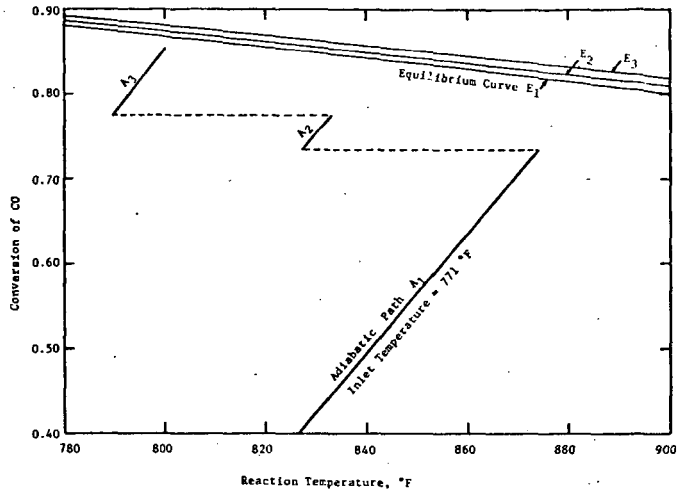

Figure 7 Reaction Path Under Optimum Condition in Cold-Quenching Reactor for Low CO Case

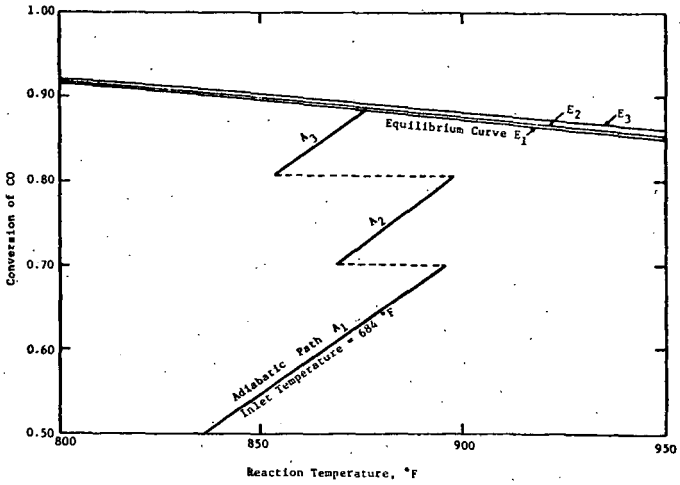

Figure 8 Reaction Path Under Optimum Condition in Cold-Quenching Reactor for High CO Case

Table 2. Optimum Operating Conditions In Adiabatic System

1. Reactor

	Low CO Case*	High CO Case†
Inlet Temperature, °F	700	650
Outlet Temperature, °F	815	899
Conversion of CO	0.855	0.883
Fraction of Gas By-passed	0.649	0.309
Space Velocity, hr^{-1} (dry gas at 60°F, 1 atm)	4380	3890
Temperature of Steam Supplied, °F	556	551
Number of Parallel Reactors	3	11
Diameter, ft.	7.0	6.7
Height, ft.	25.9	22.7
Thickness, in	3.7	3.4
Catalyst Amount/unit, cu. ft.	600	480

Steam to gas ratio selected: *1.0, †1.6

2. Heat Exchangers

Low CO Case	Waste heat Boiler	Product Gas Cooler 1	Product Gas Cooler 2
Inlet Temperature of Gas, °F	1000	788	704
Outlet Temperature of Gas, °F	765	704	460
Number of Heat Exchangers	6	5	6
Flow Rate of Gas/unit, M lb/hr	247.4	347.4	289.5
Flow Rate of Water/unit, M lb/hr	58.5	30.6	78.4
Temperature of Steam Produced, °F	556	556	250
Heat Load/unit, MM BTU/hr	32.3	16.9	40.3
Heat Transfer Area/unit, sq. ft.	850	733	1162
Heat Transfer Coefficient, BTU/(hr.sq.ft.°F)	88.1	79.3	92.5

Table 2. (Continued)

High CO Case	Waste Heat Boiler	Product Gas Cooler 1	Product Gas Cooler 2
Inlet Temperature of Gas, °F	1700	878	570
Outlet Temperature of Gas, °F	771	570	460
Number of Heat Exchangers	10	17	10
Flow Rate of Gas/unit, M lb/hr	192.7	196.1	333.5
Flow Rate of Water/unit, M lb/hr	151.9	62.2	36.8
Temperature of Steam Produced, °F	551	551	250
Heat Load/unit, MM BTU/hr	84.1	34.4	20.9
Heat Transfer Area/unit, sq.ft.	1262	1884	739
Heat Transfer Coefficient, BTU/(hr.sq.ft.°F)	91.4	66.9	90.6

Table 3. Equipment and Operational Costs In Adiabatic System

Low CO Case	Waste Heat Boiler	Reactor	Product Gas Cooler 1	Product Gas Cooler 2	Total
Reactor cost, M$	--	496.8	--	--	496.8
Catalyst cost, M$	--	36.3	--	--	36.3
Tray cost, M$	--	33.8	--	--	33.8
Control valve cost, M$	--	20.0	--	--	20.0
Heat exchanger cost, M$	41.2	--	34.2	49.1	124.5
Pump cost, M$	24.8	--	15.2	5.1	45.1
Cooling water cost, M$/yr	20.7	--	9.0	25.4	55.1
Working capital, M$/yr	4.7	20.7	2.4	3.3	31.1
Operating cost, M$/yr	49.2	167.8	24.4	33.9	275.3
Return on rate, M$/yr	2.8	22.6	2.0	2.3	29.7
Federal income tax, M$/yr	1.4	11.4	1.0	1.2	15.0
Revenue requirement, M$/yr	53.4	201.8	27.4	37.4	320.0
Steam cost, M$/yr	--	1240.2	--	--	1240.2
Total annual cost, M$/yr	53.4	1442.0	27.4	37.4	1560.2

Table 3. (Continued)

High CO Case	Waste Heat Boiler	Reactor	Product Gas Cooler 1	Product Gas Cooler 2	Total
Reactor cost, M$	--	1415.8	--	--	1415.8
Catalyst cost, M$	--	106.1	--	--	106.1
Tray cost, M$	--	94.8	--	--	94.8
Control valve cost, M$	--	52.0	--	--	52.0
Heat exchanger cost, M$	68.5	--	115.6	50.7	234.8
Pump cost, M$	63.0	--	70.7	6.2	139.9
Cooling water cost, M$/yr	89.6	--	62.5	21.8	173.9
Working capital, M$/yr	17.2	51.2	13.7	3.0	85.1
Operating cost, M$/yr	186.8	387.0	144.1	30.6	748.5
Return on rate, M$/yr	6.2	64.0	8.0	2.4	80.6
Federal income tax, M$/yr	3.3	32.1	4.1	1.2	40.7
Revenue requirement M$/yr	196.3	483.1	156.2	34.2	869.8
Steam cost, M$/yr	--	6965.5	--	--	6965.5
Total annual cost, M$/yr	196.3	7448.6	156.2	34.2	7835.3

Table 4. Optimum Operating Conditions In Cold-Quenching System for Low CO Case*

1. Reactor

	1st Stage	2nd Stage	3rd Stage
Inlet temperature, °F	771	827	812
Outlet temperature, °F	872	833	825
Conversion of CO achieved	0.735	0.775	0.855
Height of catalyst bed, ft.	9.5	2.0	9.0
Amount of quenching water, lb/hr	--	18,000	18,000

Temperature of quenching water, °F	500
Volume fraction of gas by-passed	0.649
Space velocity, hr^{-1} (dry gas at 60°F, 1 atm)	5490
Temperature of steam supplied, °F	556
Number of parallel reactors	4
Diameter, ft.	6.1
Height, ft.	26.5
Thickness, in.	3.3
Amount of catalyst/unit, cu. ft.	358
Amount of packing/unit, cu.ft.	58

*Steam to gas ratio selected: 0.9

Table 4 (Continued)

2. Heat Exchangers

	Waste Heat Boiler	Product Gas Cooler 1	Product Gas Cooler 2
Inlet temperature of gas, °F	1000	856	710
Outlet temperature of gas, °F	881	710	460
Number of heat exchangers	4	6	7
Flow rate of gas/unit, M lb/hr	371.1	290.7	249.2
Flow rate of water/unit, M lb/hr	44.9	42.7	68.8
Temperature of steam produced, °F	556	556	250
Heat load/unit, MM BTU/hr	24.8	23.5	39.0
Heat transfer area/unit, sq. ft.	517	873	1188
Heat transfer coefficient, BTU/(hr.sq.ft.°F)	98	82	87

Table 5. Optimum Operating Conditions in Cold-Quenching System for High CO Case*

1. Reactor

	1st Stage	2nd Stage	3rd Stage
Inlet temperature, °F	684	869	853
Outlet temperature, °F	895	898	876
Conversion of CO achieved	0.701	0.803	0.883
Height of catalyst bed, ft.	8.9	2.7	8.0
Amount of quenching water, lb/hr	--	32,400	57,600

Temperature of quenching water, °F	500
Volume fraction of gas by-passed	0.309
Space velocity, hr^{-1} (dry gas at 60°F, 1 atm)	4480
Temperature of steam supplied, °F	551
Number of parallel reactors	13
Diameter, ft	6.2
Height, ft	28.6
Thickness, in.	3.2
Amount of catalyst/unit, cu.ft.	353
Amount of packing/unit, cu. ft.	91

*Steam to gas ratio selected : 1.4

Table 5 (Continued)

2. Heat Exchangers

	Waste Heat Boiler	Product Gas Cooler 1	Product Gas Cooler 2
Inlet temperature of gas, °F	1700	867	570
Outlet temperature of gas, °F	823	570	460
Number of heat exchangers	9	15	9
Flow rate of gas/unit, M lb/hr	214.1	217.9	363.1
Flow rate of water/unit, M lb/hr	159.3	59.8	39.9
Temperature of steam produced, °F	551	551	250
Heat load/unit, MM BTU/hr	88.3	33.1	22.6
Heat transfer area/unit, sq. ft.	1218	1809	773
Heat transfer coefficient, BTU/(hr.sq.ft.°F)	104	68	94

Table 6 (Continued)

High CO Case	Waste Heat Boiler	Reactor	Product Gas Cooler 1	Product Gas Cooler 2	Total
Reactor cost, M$	--	1693.5	--	--	1693.5
Catalyst cost, M$	--	91.6	--	--	91.6
Tray cost, M$	--	64.5	--	--	64.5
Control valve cost, M$	--	60.0	--	--	60.0
Heat exchanger cost, M$	63.3	--	105.3	49.0	217.6
Pump cost, M$	58.0	4.2	61.2	5.8	129.2
Cooling water cost, M$/yr	84.6	17.7	52.9	21.2	176.4
Working capital, M$/yr	16.2	64.6	11.8	2.9	95.5
Operating cost, M$/yr	176.0	533.5	123.2	29.6	862.3
Return on rate, M$/yr	5.7	73.1	7.1	2.3	88.2
Federal income tax, M$/yr	3.1	36.8	3.7	1.2	44.8
Revenue requirement, M$/yr	184.8	643.4	134.0	33.1	995.3
Steam cost, M$/yr	--	6004.8	--	--	6004.8
Total annual cost, M$/yr	184.8	6648.2	134.0	33.1	7000.1

Table 6. Equipment and Operational Costs in Cold-Quenching System

Low CO Case	Waste Heat Boiler	Reactor	Product Gas Cooler 1	Product Gas Cooler 2	Total
Reactor cost, M$	--	497.9	--	--	497.9
Catalyst cost, M$	--	28.6	--	--	28.6
Tray cost, M$	--	19.4	--	--	19.4
Control valve cost, M$	--	24.0	--	--	24.0
Heat exchanger cost, M$	24.8	--	41.8	54.2	120.8
Pump cost, M$	14.6	2.9	21.4	5.8	44.7
Cooling water cost, M$/yr	10.6	7.1	15.1	28.4	61.2
Working capital, M$/yr	2.5	29.2	3.7	3.6	39.0
Operating cost, M$/yr	26.0	270.0	38.0	37.8	371.8
Return on rate, M$/yr	1.7	22.6	2.6	2.5	29.4
Federal income tax, M$/yr	0.8	11.5	1.3	1.3	14.9
Revenue requirement, M$/yr	28.5	304.1	41.9	41.6	416.1
Steam cost, M$/yr	--	1056.6	--	--	1056.6
Total annual cost, M$/yr	28.5	1360.7	41.9	41.6	1472.7

Table 7. Effect of Steam to Gas Ratio for Low CO Case

	S/G = 0.8	1.0	1.2
Inlet temperature, °F	700	700	700
Conversion of CO	0.815	0.855	0.877
Space velocity*hr^{-1}	4290	4380	4640
Number of reactors	3	3	3
Diameter of reactor, ft.	6.7	7.0	7.3
Height of reactor, ft.	24.2	25.9	26.3
Thickness of reactor, in.	3.6	3.7	3.9
Reactor cost, M$	429.4	496.8	544.5
Catalyst cost, M$	31.1	36.3	39.7
Tray cost, M$	30.3	33.8	35.1
Control valve cost, M$	20.0	20.0	20.0
Bare cost, M$	479.7	550.6	599.6
Revenue requirement, M$/yr	182.4	201.7	215.3
Steam cost, M$/yr	915.8	1240.2	1567.0
Total annual cost, M$/yr	1098.2	1441.9	1782.3

*Based on dry gas at 60°F, 1 atm.

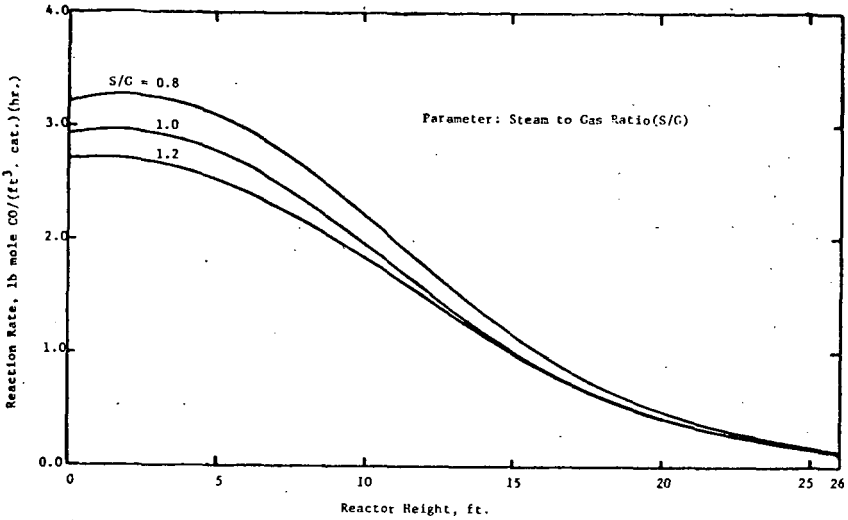

Figure 9 Effect of Steam to Gas Ratio on Reaction Rate in Adiabatic Reactor for Low CO Case

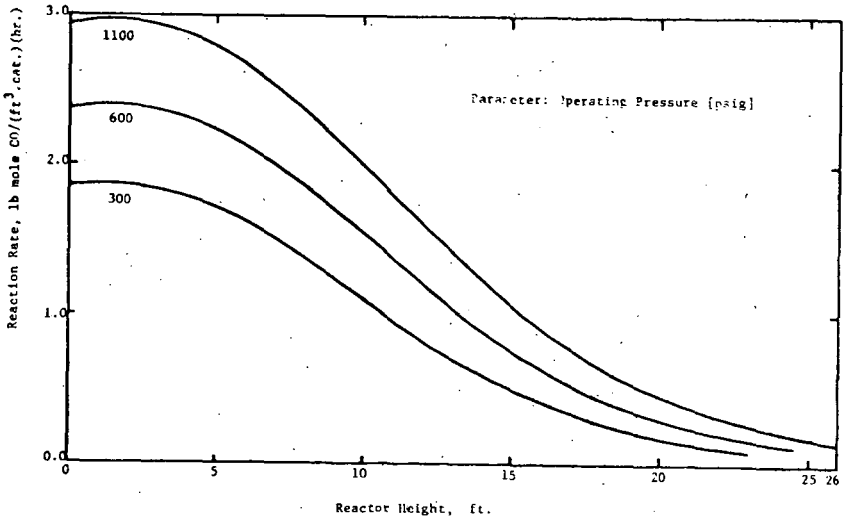

Figure 10 Effect of Operating Pressure on Reaction Rate in Adiabatic Reactor for Low CO Case

C. Comparison of the Results Using Different Reaction Rate Expressions

In section 2, two types of rate equation, namely the pseudo-first order equation (2) and the second order equation (11) are discussed. Since the design of the reactor depends greatly upon the rate equation, it will be necessary to compare the results obtained using the two rate equations. The operating conditions and the corresponding costs based on the two equations are listed in Table 9 for the adiabatic reactor. Because the applicable range of both equations favors low pressures, 300 psig is selected as the operating pressure. As can be seen from the table only small differences exist between the two results indicating that the water-gas shift reaction can be represented by either of the two equations in this range. The second order equation however seems to provide more conservative estimate than the first order equation.

D. Pressure Drop in Quenching Zone

Since the quenching zone is usually packed with rings and saddles, more pressure drop is expected in this region. Either of the following equations may be used for the approximation of pressure drop:

$$\Delta P/Z = 0.012\ C_f G^2/6g_c\rho \qquad (44)\ [20]$$

or

$$\Delta P/Z = k'\ v^n \qquad (45)\ [1]$$

If the values, $G = 7000$ lb/(ft^2 hr.) and $\rho = 1.5$ lb/ft^3 are used, then $\Delta P/Z = 0.05$ psi/ft by equation (44) and 0.03 psi/ft by equation (45). Therefore the pressure drop through quencing zone in this study can be neglected, unless the packing height is much larger than anticipated.

E. Effect of Sulfur Content in Gas

The sulfur content in gas is another important factor affecting greatly the performance of water-gas shift reaction. Therefore, if the amount of sulfur exceeds the allowable value, the catalyst activity deteriorates considerably requiring periodical generation. However, since the allowable sulfur content varies considerably depending on the type of catalyst used, the determination must be based on the experimental data obtained from the specific catalyst.

The study of Bohlbro [5] indicates that the kinetics of water-gas shift reaction may be modified by the presence of H_2S in the feed gas. According to his experimental results, if the content of H_2S is less than 100 ppm (part per million) only physical adsorption on the surface of catalyst takes place, but above 1000 ppm kinetics will be altered because

of the transformation of iron oxide into iron sulfide. On the other hand, Girdler [7] described that sulfur content above 150 ppm reduces the activity of catalyst greatly, but below 50 ppm sulfur does not have any significant effect on the activity of their catalyst. Mars [13] also discussed the effect of sulfur content on activity of catalyst showing removal of sulfur compounds from the feed gas increases the performance of reactor considerably.

The sulfur content in raw gas from the gasifier varies widely depending on the process, some of which could have as much as 0.9% of H_2S. However, this study is made based on the assumption that the sulfur content is small enough to be tolerated by the catalyst without causing substantial deactivation. In general, unless the sulfur content in the feed gas is very high, it is possible in most cases to select a proper type of catalyst that will withstand the sulfur poisoning for substantial length of time. On the other hand, if the catalyst gets deactivated it is also possible to modify the space velocity in the reactor to the corresponding reduction in catalyst activity. The recent study of Ting and Wan [19], shows another approach for handling sulfur-containing gases. Here the rate constant is modified by a sulfur correction factor, the value of which are obtained in terms of operating pressure up to 30 atm. for the gases containing H_2S as high as 0.24%.

F. Sensitivity Analysis

The current optimization involves a number of specific system parameters. But the information on these parameters are not necessarily accurate. Such an uncertainty of parameters is incurred by various internal and external factors and may affect the performance of optimization considerably under certain conditions. The sensitivity study here is intended to bring about a better system performance by analyzing the effect of variation in parameters on objective function. The sensitivity of a given parameter, S_e may be represented as [22]

$$S_e = [(J - \bar{J})/\bar{J}]/[(w - \bar{w})/\bar{w}] \tag{46}$$

Referring to the results listed in Table 10, it is seen that the objective function is most sensitive to the parameters involved in kinetic expression. As is also expected, the dimension and character of catalyst pellet play an important role in the reactor performance.

Table 8 Effect of Pressure on Reactor Operation for Low CO Case

	300 psig	600 psig	1100 psig
Inlet temperature, °F	700	700	700
Conversion of CO	0.855	0.855	0.855
Space velocity*, hr^{-1}	2730	3540	4380
Number of reactors	3	3	3
Diameter of reactor, ft.	9.4	8.0	7.0
Height of reactor, ft.	23.0	24.5	25.9
Thickness of reactor, in.	1.5	2.4	3.7
Reactor cost, M$	259.8	358.0	496.8
Catalyst cost, M$	57.4	44.8	36.3
Tray cost, M$	49.2	42.0	33.8
Control valve cost, M$	20.0	20.0	20.0
Bare cost, M$	329.0	420.0	550.6
Revenue requirement, M$/yr	177.8	183.8	201.7
Steam cost, M$/yr	1240.2	1240.2	1240.2
Total annual cost, M$/yr	1418.0	1424.0	1441.9

Table 9 Comparison of the Results from First- and Second-Order Rate Equation at 300 psig for Low CO Case

	Eq. (2)	Eq. (11)
Inlet temperature, °F	700	700
Outlet temperature, °F	815.5	814.7
Conversion of CO	0.855	0.849
Space velocity*, hr^{-1}	2730	2030
Number of reactors	3	3
Diameter of reactor, ft.	9.4	9.9
Height of reactor, ft.	23.0	28.1
Thickness of reactor, in.	1.5	1.6
Reactor cost, M$	259.8	338.5
Catalyst cost, M$	57.4	70.3
Tray cost, M$	49.2	73.6
Control valve cost, M$	20.0	20.0
Bare cost, M$	329.0	432.1
Revenue requirement, M$/yr	177.8	219.4
Steam cost, M$/yr	1240.2	1248.9
Total annual cost, M$/yr	1418.0	1468.3

* Based on dry gas at 60°F, 1 atm.

Table 10 Parameter Sensitivity on Objective Function of Adiabatic Water-Gas Shift Conversion

Parameters	Sensitivity: Low CO Case	Sensitivity: High CO Case
U_h	-0.3522×10^{-2}	-0.1218×10^{-2}
U_v	-0.8555×10^{-2}	-0.1977×10^{-2}
k_o	-0.3540×10^{-1}	-0.1902×10^{-1}
E	0.1452×10^{1}	0.7046×10^{0}
d_p	0.7971×10^{-1}	0.4530×10^{-1}
S_p	-0.3340×10^{-1}	-0.1847×10^{-1}
ρ_p	-0.3457×10^{-1}	-0.1892×10^{-1}
D_{e_p}	-0.3311×10^{-1}	-0.1832×10^{-1}
ρ	-0.1181×10^{-2}	-0.1305×10^{-4}
μ	-0.7195×10^{-3}	-0.8584×10^{-5}

8. CONCLUSION

A. In the operation of water-gas shift reactor, steam cost occupies the major portion of the total cost. The reduction of the amount of steam is therefore most important in making the process more economical.

B. The total annual cost is not greatly affected by the variation in the reactor inlet temperature between 650°F to 750°F when the concentration of CO in the feed gas is low or moderate. For the gas of high CO concentration, however, the sensitivity due to the inlet temperature variation is increased.

C. The optimum conversion is very close to the equilibrium conversion in most cases, which is mainly due to the role of steam cost in the objective function.

D. Although the kinetics information of water-gas shift rection may not be accurate for high pressures, the operation beyond 400 psig does not seem to have any particular advantage.

E. In cold quenching reactor, major part of the total conversion is achieved in the first stage but both the first and the last stage of the reactor occupy the largest portion of overall reactor system.

F. The concentration of CH_4 and CO in the feed gas is the primary factor affecting the process cost. Because of the steam cost, the cold-quenching system is less costly than the adiabatic system in most cases, particularly in the high CO concentration case. However, if the steam can be ignored, the adiabatic system will be suitable for low CO concentration of less than 25% on dry basis.

G. From the sensitivity study, the objective function appeared to be somewhat sensitive to the parameters related to the kinetic expression and the character of catalyst pellet, indicating that special care must be exercised for the determination of these parameters.

ACKNOWLEDGMENT

The authors gratefully acknowledge the support of the Office of Coal Research, Department of the Interior, Washington, D.C.

NOMENCLATURE

A_1, A_2, A_3	Adiabatic paths in reaction zones of the first, second and third stages, respectively
A_h, A_v, A_T	Heat transfer areas of the heating zone, the vaporizing zone, and the total, respectively [sq.ft.]
B, B_p	Baffle spacing [ft.], and Brake horse power [hp.], respectively
C_i, C_b, C_c	Concentration of component i [mole frac.], and concentrations of product gas in bulk of gas phase and at catalyst surface [lb mole/cu.ft.], respectively
C_f	A constant related to the packings and fluid flow
C_L	Height of a unit compartment [ft.]
C_p, C'_p	Heat capacities of gases and water, respectively [BTU/(lb.°F)]
$C_{p_{im}}$	Molar temperature-mean heat capacity of component i [BTU/(lb mole,°F)]
C_R, C_y	Cost per pound of material used for construction of reactor shell [$/lb], and cost year index, respectively
d, D	Characteristic length in reactor and inside diameter of reactor, respectively [ft.]
D_a	Axial dispersion coefficient [sq.ft./hr.]
D_{e_1}, D_{e_p}	Effective diffusivity of CO in catalyst pores at 1 atm and at pressure p, respectively [sq.ft./hr.]
D_i, D_o, D_s	Inside diameter of tube, equivalent diameter for heat transfer tube, and inside shell diameter of heat exchanger, respectively [ft.]
d_p	Diameter of catalyst pellet [ft.]
E	Activation energy in pseudo first order rate equation [BTU/lb mole]
E', E_f	Efficiency of the longitudinal joints in cylindrical shells, and mechanical efficiency, respectively
E_c, E_{ST}	Cost of catalyst [$] and steam [$/yr], respectively
E_H, E_p, E_R, E_S	Costs of heat exchanger, pump, reactor and catalyst supporting tray, respectively [$]
Fd	flat blank diameter of top and bottom of domes of reactor [ft.]
F_i^{n-1}, F_i^n	Molar flow rates of component i at (n-1)-th compartment and n-th compartment, respectively [lb mole/hr]
f_s	Shell side friction factor [sq.ft./sq.in.]
g, g_c	Gravitational acceleration [ft./sq.hr.]
G	Superficial gas mass velocity [lb./(sq.ft.hr.)]
G_i, G_s	Mass velocity in tube side and shell side, respectively [lb/(sq.ft.hr.)]
Δh	Hydraulic head [ft.]
$\Delta H, \Delta H_{T_o}$	Heat of reaction at any temperature and at temperature T_o, respectively [BTU/lb mole CO]
h_i, h_o	Film heat transfer coefficient in inside and outside, respectively [BTU/(sq.ft.hr.°F)]
h_p	Fluid-particle heat transfer coefficient [BTU/(sq.ft.hr.°F)]
I_c, I_f	Unit cost of catalyst [$/cu.ft.] and cost factor, respectively
J, J	Objective function for a given value of parameter and that at the optimum condition, respectively
J_H, J_M	Heat transfer factor and mass transfer factor, respectively

K_y	Equilibrium constant based on mole fraction
k', n	Constants related to the packings and fluid flow
k	Reacton rate constant in second order rate equation [hr^{-1}]
k_{a_1}, k_{a_p}	Apparent catalyst activities at 1 atm and at pressure p, respectively [hr^{-1}]
k_c, k_e	Thermal conductivity of catalyst and effective thermal conductivity of catalyst particle, respectively [BTU/(ft.hr.°F)]
k_f	Fluid-particle mass transfer coefficient [ft/hr.]
k_g, k_w	Thermal conductivity of gas and water, respectively [BTU/(ft.hr.°F)]
k_o	Apparent first order rate constant based on the unit catalyst bed volume [hr^{-1}]
k_s	Intrinsic catalyst activity based on unit surface area [ft. lb mole/(hr.BTU)]
k_{v_1}	Intrinsic rate constant at 1 atm [hr^{-1}]
L, L_H	Lengths of reactor and heat exchanger, respectively [ft.]
N, N_{Pr}	Number of trays and Prandtl number, respectively
$P, \Delta P$	Pressure of the system and pressure drop, respectively [lb_f/sq.in.]
p, p_e	Partial pressure of CO at any time and at equilibrium, respectively [lb_f/sq.in.]
Q	Heat transfer rate in heat exchangers [BTU/hr.]
q	Volumeric flow rate of water [gal./min.]
r	Radial distance in catalyst particle [ft.]
R	Gas constant [BTU/(lb mole, °R)]
R'	Inside radius of cylinder [in.]
r_{CO}, r'_{CO}	Reaction rate of CO [lb mole CO/(hr.cu.ft.cat.)], [cu.ft. CO/(hr.cu.ft.cat.)], respectively
R_d	Dirt factor in heat exchanger
r_s	Reaction rate per unit catalyst particle [lb mole CO/(hr.unit cat.)]
s, S, S_e	Specific gravity, steam flow rate [lb/hr.] and sensitivity, respectively
S_p, S_r, S_v	Specific surface area of catalyst [sq.ft./lb], maximum allowable stress value [lb_f/sq.in.] and space velocity at N.T.P. basis [hr^{-1}], respectively
t	time [hr.]
T	Temperature, The subscript denotes the stage number and the superscript represents the status [°F] [°R]
T_1, T_2	Temperature of shell side at outlet and inlet, respectively [°F]
T_b, T_c	Bulk gas temperature in reactor and surface temperature of catalyst particle, respectively [°F]
T_h	Thickness of reactor shell [in.]
T_m	Shell side gas temperature at which vaporization of water starts to take place [°F]
T^{n-1}, T^n	Exit temperature of (n-1)-th compartment and n-th compartment, respectively [°F]
T_o, T_s	Standard temperature (77°F), and temperature of steam [°F], respectively
U	Overall heat transfer coefficient [BTU/(sq.ft.hr.°F)]

U_h, U_v, U_T	Overall heat transfer coefficients for heating zone, vaporizing zone, and whole heat exchanger, respectively [BTU/(sq.ft.hr.°F)]
v, V	Axial mean velocity [ft./hr.] and linear velocity of gas in empty tower [ft./sec.], respectively
V_c^n, V_c	Catalyst volume per unit compartment, and of total reactor, respectively [cu.ft.]
W	Quenching water. The subscript denotes the stage number [lb/hr]
$w, \bar{w}$	Parameter subject to variation and that at a specific value considered, respectively
W_R, W_S	Weight of reactor [lb.], mass flow rate of gas in shell side [lb./hr.] respectively
W_{ST}, W_T	Mass flow rate of steam and water in tube side, respectively [lb./hr.]
X, X_e	Fractional conversion of CO at anytime and at equilibrium, respectively. The subscript denotes the stage number and the superscript represents the status.
$\bar{Y}_N$	State vector in N-th stage
Z	Height of packing [ft.]

GREEK LETTERS

ε	Voidage of catalyst bed
$\bar{\theta}_N$	Decision vector at N-th stage
η_1	Effectiveness factor at 1 atm
ζ	Internal porosity of catalyst
λ	Latent heat of water [BTU/lb.]
μ, μ_w	Viscosity of gas and water, respectively [lb./(ft.hr.)]
μ_o	Viscosity of water at tube-wall temperature [lb/(ft.hr.)]
$\rho, \rho_m, \rho_p, \rho_w$	Density of gas reactor material, catalyst particle, and water, respectively [lb./cu.ft.]
Φ_1	Thiele modulus at 1 atm

APPENDIX

In case that the vaporization is taking place inside the tube, the calculation of heat transfer coefficient is difficult. However, the following simplified approach is used in this study, by separating the heat exchanger fictitiously into two zones: heating zone and vaporizing zone. Then the temperature T_m at which the vaporization starts to take place corresponding to the boundary of the two zones in the tube can be calculated by a heat balance:

$$T_m = T_1 + W_T C_p' (t_2-t_1)/(W_s C_p) \tag{47}$$

The log-mean temperature differences in the heating zone and vaporization zone are:

$$T^1_{\ell.m.} = [(T_m-t_2)-(T_1-t_1)]/\ell n\ [(T_m-t_2)/(T_1-t_1)] \tag{48}$$

$$T^2_{\ell.m.} = [(T_2-t_2)-(T_m-t_2)]/\ell n\ [(T_2-t_2)/(T_m-T_2)] \tag{49}$$

The overall heat transfer coefficient for each zone can be obtained by

$$1/U = 1/h_i + 1/h_o + R_d \tag{50}$$

Then the heat transfer areas for heating zone and vaporization zone become

$$A_h = W_T C_p' (t_2-t_1)/(U_h T^1_{\ell.m.}) \tag{51}$$

$$A_v = 0.5\lambda\ W_T/(U_v T^1_{\ell.m.}) \tag{52}$$

Thus the total area is

$$A_T = A_h + A_v \tag{53}$$

And the average overall heat transfer coefficient U_T is obtained

$$U_T = Q/(A_T T^o_{\ell.m.}) \tag{54}$$

where

$$T^o_{\ell.m.} = [(T_2-t_2)-(T_1-t_1)]/\ell n\ [(T_2-t_2)/(T_1-t_1)] \tag{55}$$

REFERENCES

[1] ASME Boiler and Pressure Vessel Code, Section VIII, Unfired Pressure Vessels, The American Society of Mechanical Engineers, New York, 1956.
[2] Bellman, R., "Dynamic Programming," Princeton University Press, Princeton, N.J., 1957.
[3] Bhavnani, K.H., Chen, K., "Optimization of Time-Dependent Systems by Dynamic Programming," Joint Automatic Control Conference Proceedings, 1966.
[4] Bohlbro, H., Acta Chem. Scand., 15, 502 (1961).
[5] Bohlbro, H., Acta Chem. Scand., 17, 7 (1963).
[6] Chilton, C., "Cost Engineering in the Process Industries," McGraw-Hill, New York, p. 50, 1960.
[7] Communication, Girdler Catalyst, Louisville, Ky., April, 1968.
[8] Ergun, S., Chem. Eng. Progr. 48, 89 (1952).
[9] Gamson, B.W., Chem. Eng. Progr. 47, 19 (1951).
[10] Kern, D. Q., "Process Heat Transfer," McGraw-Hill, New York, 1950.
[11] Laupichler, F. G., Ind. Eng. Chem. 30, 578 (1938).
[12] Levenspiel, O., "Cehmical Reaction Engineering," John Wiley and Sons, Inc., New York, P. 274, 1962.
[13] Mars, P., Chem. Eng. Sci. 14, 375 (1961).
[14] McCabe, W. L. and Smith, J.C., "Unit Operations of Chemical Engineering," McGraw-Hill, New York, 1956.
[15] Moe, J. M., Chem. Eng. Progr. 58, 33 (1962).
[16] Norman, W. S., "Absorption, Distillation and Cooling Towers," Longmans, England, p. 327, 1961.
[17] Page, J. S., "Estimators' Manual of Equipment and Installation Cost," Gulf, Houston, 1963.
[18] Ruthven, D. M., "The Activity of Commercial Water-Gas Shift Catalysts," Tripartite Conference, Montreal, Sept. 23, 1968.
[19] Ting, A. P. and Wan, S. W., Chem. Eng., May 19, 185 (1969).
[20] Treybal, R. E., "Mass Transfer Operations," Second ed., McGraw-Hill New York, p. 162, 1968.
[21] Utility Gas Production General Accounting Procedure, American Gas Association, May 20, 1965.
[22] Wen, C. Y. and Chang, T. M., Ind. Eng. Chem. Process Design Development 7, 49 (1968).
[23] Wilke, C. R. and Hougen, O. A., Trans. A.I.Ch.E. 41, 445 (1949).

Costs of Liquid Fuels from Oil Shale

Harry Perry 1/

U.S. Department of the Interior
18th and C Streets, N.W.
Washington, D.C. 20240

I. Introduction

The immense size of the oil shale deposits of Colorado, Utah, and Wyoming with their promise of riches have been a constant challenge to the scientist, the engineer, the entrepreneur and, indeed, the entire petroleum industry. The shortage of oil during World War I provided a stimulus for investors to try to bring this resource to the point of commercial utilization. By the early 1920's ownership of the land had been complicated by the terms of the Mineral Leasing Act of 1920, which changed the method by which the lands could be alienated. In addition there was no indication that the processes then under consideration were technically or economically attractive, and the establishment of an oil shale industry did not occur at that time. Subsequently, the discoveries of very large, low cost reserves of oil in East Texas delayed the possible development of the resource for many years.

Legal problems associated with title to the lands have been an integral part of the history of the oil shale deposits. Concern over the disputes about ownership led to the withdrawal of the lands in 1930 for oil shale leasing. The withdrawal has continued to the present except for three test leases which were offered in December 1968. In 1964, the Department of the Interior instituted some test cases against the pre-1920 claims which are still under consideration. Other actions were taken to test the validity of post-1920 claims and as a result, the Department of the Interior has made great strides in resolving the title clearance issues. Their resolution is indispensable to the orderly development of the resource.

II. The Need for Synthetics

As shown in Table I, demand for energy is expected to continue to rise, as it has in the past, so that BTU consumption in the U.S. may increase about 260 percent between 1968 and the year 2000. In absolute terms this is an increase in demand of an oil equivalent of 11.0 billion to 28.7 billion barrels per year. Energy use in the form of liquid fuels is expected to increase about 190 percent over this same period or an increase of from 4.9 billion barrels in 1968 to 9.6 billion barrels in 2000. Most of the demand for petroleum will continue to be used in the transportation sector (autos, trucks, buses, airplanes); this sector is dominated by liquid fuels which supplied over 95 percent of the energy consumed in 1968.

These predictions were made during a time when, while there was an awareness that air pollution and other environmental controls could have an impact on patterns of energy consumption, the potential magnitude of the new environmental standards could not be factored into the projections. For example, recent indications that leaded gasoline may no longer be an acceptable fuel have opened up new requirements and opportunities for meeting the demands of the transportation sector. Lead-free gasoline can be produced using present technology but this requires a higher percentage of aromatics and isoparaffins if octane ratings are to be maintained. To meet any wide-spread demand for lead-free gasoline would require that the petroleum industry install an enormous amount of additional processing units, particularly for reforming and alkylation. The extra costs of lead-free gasoline have been estimated to be 2 cents per gallon or a total cost of 2 billion dollars a year in the U.S.

1/ Mineral Resources Research Advisor, Assistant Secretary of Mineral Resources Office

The need to tool up to produce modified designs of engines and fuels could induce industry to look seriously at other automotive power plants such as gas turbines, steam engines, Wankel engines, combined gasoline-natural gas engines or electric vehicles.

Environmental considerations are rapidly creating a large new demand for a low sulfur residual oil to be used at electric generating stations and industrial plants. This fuel would replace coal which could not meet air pollution standards for sulfur oxide emissions. In PAD District I, where under present oil import regulations, unlimited amounts of residual oil imports are permitted, imported low sulfur residual has already replaced significant amounts of high sulfur coal. Recently, approval was given for importation of low sulfur residual oil into Chicago. If oil import regulations are changed (specific recommendations for change have been made to the President by a Cabinet Level Study Group) this trend could be greatly accelerated.

As previously noted, the combined effects of these two developments or others still to come, on total liquid fuel demand are still too recent to permit modification at this time of the projections shown in Table I. However, the effects of these and other changes caused by the establishment of future environmental standards will affect the patterns of demand and supply. On the other hand, all the fuel resources at our disposal will have to be used in some form if the tremendous demand for energy that has been predicted actually occurs. The fuel forms may have to be modified to meet other standards placed on them but the total energy demand could not be met if oil (or heat units derived from it) were not used in about the quantities shown in Table 1.

Synthetics, whether from oil shale, tar sands or coal, will only be used when they can compete economically with other energy sources or with crude petroleum under the public policies that prevail at any given time. The ability of synthetics to enter the market will obviously depend on how much crude oil is found. This in turn is a function of the oil import program that eventually emerges, the incentive for investment in exploration, and the size of the Alaskan discovery coupled with the cost of delivering that crude oil to markets. As shown in Figure 1, the declining reserves to production ratio that started in the early 1960's is expected to continue and this should provide an incentive for the oil industry to look to other sources of supply.

III. Oil Shale Development--Non-Technologic Factors

The development of the oil shale resource is dependent on the existence of a technically feasible process that is economic under the conditions prevailing that determine the price of crude oil. The major non-technical factors that affect the price of crude oil with which shale oil would compete are the oil import program (how much can be imported and under what conditions), the depletion allowance for oil, state prorationing practices, and Federal leasing policies both on-shore and on the Outer Continental Shelf--particularly new stringent safety regulations which may increase costs.

Other important factors that will affect the timing and the rate at which oil shale processing becomes commercial are the rate at which the clouded titles on most of the publicly owned lands can be removed, any modifications of the terms of the Mineral Leasing Act of 1920 under which the oil shale lands are leased by the Government, which of the different bidding procedures the Government elects to use, and the terms and provisions of the lease. Certain types of shale deposits are almost entirely in Government ownership. If a technology is developed for using them that is more economic than for the deposits in private hands, then the Government would control entirely by its lease offerings the rate and time when an oil shale industry would emerge.

In addition, actions taken by state and local governments could either help or deter an oil shale development, the large capital requirements to attain economies of scale will limit the number of possible participants in the industry, and the institutional practices of the oil industry will make it difficult for those not

already in the oil business to enter an oil shale industry. Moreover, the relative costs, as well as other factors, of producing synthetics from oil shale compared to coal will also be of importance in determining the onset of an oil shale industry.

IV. Status of Oil Shale Technology

There are basically two ways to produce a crude shale oil from oil shale. In the first, the oil shale is mined and then retorted where, by the application of heat, the crude shale oil is distilled from the oil shale. In the second, wells are drilled from the surface to the oil shale deposit, the permeability of the oil shale is increased by some method, and the shale oil distilled from the deposit by an in situ application of heat.

1. Mining

Underground mining, using the room and pillar method, was extensively investigated by the Bureau of Mines and Union Oil Company during the 1950's and by the Colony Group in the 1960's. These experiments concentrated on developing methods to extract the 70-foot thick rich Mahognany ledge deposit which is found in many parts of the Piceance Basin in Colorado. Feasible methods for underground mining have been demonstrated although there are still potentials for further cost reduction.

Open pit mining of oil shale should present no problems that have not been solved in mining for other mineral resources by this method. However, there has been no experimental testing of open pit mining in the oil shale resource. The costs associated with this method of mining will depend on the thickness and grade of shale and on the geologic conditions--the thickness of the overburden and its physical characteristics. It has been suggested that appreciably lower costs than those associated with underground mining operations can be anticipated in locations where a rich deposit of shale outcrops to the surface. In such a case, there would be little investment required before commercial amounts of shale could be extracted and used and costs should be low.

2. Retorting

In the retorting of mined shale a large number of processes have been proposed, but in the last decade only three have been tested extensively enough to be considered for commercial development at this time. These are the Bureau of Mines gas combustion retort, the Union Oil Company retort and Oil Shale Corp., (TOSCO) process. The Bureau of Mines and Union Oil Company retorts, both of which are internal-combustion types, are based on similar process principles with the major difference being the direction of flow of the shale and air. The TOSCO process consists of a retorting kiln in which finely crushed oil shale is heated to retorting temperature by heat exchange with hot ceramic balls heated in another vessel. It is claimed that more shale oil is recovered per ton of oil shale treated and that the shale oil is of better quality than that produced in the retorts using direct heating and a larger sized oil shale feed. However, the economics of the production of shale oil estimated in this paper are based on results obtained in the Bureau of Mines gas combustion retort since insufficient published data were available for the other two processes to make engineering estimates of costs of shale oil produced by them.

3. In Situ Retorting

In situ retorting of shale using non-nuclear techniques for increasing the permeability of the oil shale has been tested by several companies and by the Bureau of Mines. Methods used in recent experiments by the Bureau of Mines to increase the permeability of the oil shale included electrolinking, hydraulic fracturing and explosive fracturing. Electrolinking followed by hydraulic fracturing did not increase permeability appreciably. Explosive fracturing following hydraulic fracturing

improved the permeability by a factor of 5. In a series of field tests, 11 new wells were drilled in an area where 4 previous wells had been drilled. The center well was ignited in an attempt to retort a 20-foot thick (22 gallons per ton) section of the oil shale located 68 to 88 feet below the surface. After six weeks of operation, the process produced 190 barrels of a medium viscosity low pour point shale oil. Later tests of the deposit indicated that only a 5-foot section of the 20-foot shale bed had been retorted. Although there remain several important unsolved problems, such as better utilization of the shale, improved control of the combustion front, and the use of wider spaced wells with reasonable pressure drop, these in situ tests have demonstrated a much higher degree of technical feasibility for the process than had previously been demonstrated.

The use of a nuclear device, exploded underground to create a chimney filled with broken oil shale which could then be retorted in place, has been under serious consideration for over 10 years in a program to be sponsored jointly by industry and Government.

Extensive preliminary engineering studies have been made to estimate (1) the size of the chimney from a given sized device detonated in oil shale, (2) the size distribution of the broken shale, and (3) the amount of shale oil that would be recovered from a single chimney.

To determine the amount of shale oil that could be recovered from a mass of broken rock containing the wide size distribution that might result in a nuclear made chimney, a 175-ton retort was constructed to simulate those conditions. The retort was filled with oil shale ranging in size from fines to one large piece weighing 7500 pounds. In a single 24-day experiment, an oil yield of approximately 60% of the Fischer assay was obtained. Operation of the retort was smooth with uniform temperature distribution across the bed and with low pressure drop. The characteristics of the shale oil were a little better than those obtained from above-ground retorting in the gas combustion retort having a somewhat lower pour point and viscosity and a lower nitrogen content.

Additional tests will be required to firm up what was learned in this single experiment but there is every indication that higher recoveries and better quality of product can be produced when the optimum operating conditions are established.

V. The Economics of the Oil Shale Production

In the Department of the Interior report on oil shale issued in May 1968, 1/ shale oil production was estimated for 5 different mining systems each using (1) a 45-foot diameter retort, (2) a 60-foot diameter retort, and (3) a second generation retort using improved technology. The capital investment, annual operating costs and cost per barrel for each of these 15 conditions are shown on Table 2.

Using a 12 percent discounted cash flow and with no value assigned to the shale resource the cost per barrel (after a 61 cents credit for by-products) is shown in Figure 2 for 6 sets of conditions. The two plants for 1972 were identical except for oil shale quality. Increasing the quality of that shale from 30 to 42 gallons per ton decreased costs 72 cents per barrel. The 1976 case, in addition to using a larger diameter retort than was used for the 1972 case, compared the effect of open pit to room and pillar mining. It also tested the effect of increasing plant size by four fold. An increase from 62,000 to 250,000 barrels per day decreased costs 27 cents per barrel.

Since these calculations were made, four important factors that significantly affect the economics have occurred. These are (1) the by-product credit of 61 cents per barrel is believed to be too high and a more realistic value is probably 41 cents per barrel for all cases except the second generation plant where 77 cents is used in these new calculations, (2) capital and operating costs of new plants have

---

1/ Prospects for Oil Shale Development--Colorado, Utah, and Wyoming, Department of the Interior, May 1968

increased significantly over the 1966 costs used in the earlier report, (3) the point at which the depletion allowance is applied has been changed by law from 15 percent on the oil shale to 15 percent on the crude shale oil, and (4) the value of the semi-refined shale oil in Colorado has increased about 25 cents per barrel.

Table 3 compares the 1966 and 1969 conditions for four different types of retorts and mining systems. Capital investment costs increased about 10 percent during this period. Annual operating costs increased from a low of 13 percent for the improved first generation retort and improved room and pillar mining system (case 3) to a high of 25 percent for the first generation retort with conventional room and pillar mining (case 1)

The decreased value assigned to by-product credits of 41 cents in the 1969 study compared to 61 cents assigned in 1966 was more than balanced by the increased value of the semi-refined crude oil in Colorado. The net market value of the products resulted in an increase of 5 cents per barrel to $3.74. On the other hand, even after the tax benefits that accrue from changing the point at which the depletion allowance may be credited, and this is approximately 10 cents per barrel, the increased capital and operating costs raised the cost of producing semi-refined crude oil from a low of 12 cents (case 3) to a high of 38 cents per barrel (case 1). As a result, the discount rate (at zero resource value) that equates cash flow to cost dropped from 13 to 9 percent for case 1 and from 22 to 20 percent for case 4 with intermediate values for cases 2 and 3.

In situ retorting costs for 1966 for both nuclear and conventional were shown in the 1968 oil shale report. For the most favorable case, i.e., nuclear in situ with a 70 percent recovery efficiency of the oil and air pressure for retorting at 50 p.s.i., costs were estimated at $2.98 per barrel of shale oil. The 1969 costs increased 45 cents for a total cost of $3.43 per barrel. This is a larger increase than for any of the cases shown in Table 3, and results in part from the method by which the depletion allowance was applied in the 1966 estimate. Since no oil shale is mined during in situ retorting it was not possible to take a 15 percent depletion on the oil shale. As a result, it was taken on the shale oil. Consequently, in the 1969 estimate there was no additional reduction as a result of the change in depletion allowance from oil shale to shale oil.

The 1966 estimate included costs for prevention of air and water pollution from both the retorting and refining operations. It also included costs for purchase of land and for other costs involved in storing spent shale in a manner which would prevent air pollution from the dried spent shale and water pollution from the leaching of the spent shale. However, the costs did not involve replacing as much of the spent shale as possible in either underground or open pit mines. While such costs will vary widely from lease to lease depending on other factors that determine plant location with respect to the mine (water availability, access to the property, suitable areas for the balance of waste disposal, relative elevation of the plant and mine) an average value of about 20 cents per barrel has been estimated over previous estimates for waste disposal.

Another limitation of these estimates (both the 1966 and the 1969) is that they represent average conditions and cannot reflect either the lower or higher costs that may be associated with geologic conditions that differ from the average. All new mining ventures attempt to use the highest grade deposits and the most favorable geologic conditions first in order to make the economics of the first plants more favorable. It has been suggested that if conditions particularly favorable to open pit mining could be found for the thick deposits that contain good quality shale that much lower costs than those indicated above might be attainable. Mining capital and operating costs for case 1 represent about $1.25 per barrel of a total cost of about $4.00. Thus, material reduction of the mining cost, for example, by 50 percent would have an important and possibly controlling impact on the economics of shale oil production. If thick beds of shale that outcropped at the surface could be located, so that very small head-end costs (requiring little overburden to be removed) before commercial production of oil shale were possible, mining cost reductions of the order mentioned may be attainable.

As mentioned above, other technology about which the Department of the Interior had insufficient information to make cost estimates similar to those made for the gas combustion retort tested by the Bureau of Mines might indicate production of shale oil at costs lower than those shown. The absence of commercial developments on privately-owned land, combined with the weak bids received on the three tracts offered by the Department in December of 1968, would appear to indicate that this other technology is probably not much more advanced than the marginal technology of the gas combustion retort.

Finally, in using these cost estimates it should be remembered that, while they are believed to be accurate within ± 10 percent, there is no certainty that they are this accurate. Even a ± 10 percent error introduces a possible ± 40 cents per barrel error which would represent a change in the D.C.F. from 9 percent to over 15 percent for case 1. Obviously, the variations of a cost engineering estimate for a non-existent technology might be even greater, and could make the difference between a very profitable or a very marginal operation.

VI. Conclusions

In the past two years additional and promising information has been developed with respect to the in situ (nuclear and non-nuclear) retorting of oil shale. In non-nuclear in situ retorting, methods to increase appreciably the permeability of the oil shale have been demonstrated. Also proven in a retorting experiment were (1) a combustion zone can be established in fracturing oil shale, (2) this zone can be moved through shale by air injection, (3) permeability does not decrease during retorting (at the shallow depths tested), and (4) recovery of the shale oil presents no special problems.

In nuclear in situ retorting, the above-ground processing of a simulated nuclear chimney indicated that under these conditions good control of the combustion front could be achieved and that even the largest pieces of oil shale could be retorted satisfactorily. No other new experimental data have been published during the past two years to establish the feasibility of the nuclear in situ retorting process.

Earlier cost estimates of both nuclear and non-nuclear in situ retorting were based on the assumptions that the new experiments performed in the past two years would be successful. As a result, it was unnecessary to recalculate these estimates. As a result of increased capital costs the most favorable in situ case showed an increase of 45 cents per barrel between 1966 and 1969, but remained in the competitive range with above-ground retorting.

The situation with respect to above-ground retorting indicates that, for the four cases which were recalculated, although a number of changes in the assumptions must be made to reflect 1969 conditions, shale oil remains marginally competitive as it did in 1966. This, however, does not consider the availability of any greatly improved proprietary technology for either mining or retorting or the use of a lease with very favorable geologic conditions. For any of these conditions, or combinations of them, a first commercial oil shale plant may look very financially attractive.

Table 1

Energy Consumption by Sector, 1968 and 2000
Trillions of BTU

	1968	2000
Residential and Commercial	13,599	21,066
Industrial	19,348	32,594
Transportation	15,136	36,600
Electricity Generation	14,046	72,291
Miscellaneous and Unaccounted for	295	------
Bureau of Mines (1969) Estimate	62,424	162,551
Estimate Made in "Energy R & D and National Progress" (1963)		135,000
Estimate Made by Batelle Northwest (1969)		170,000

Table 2 - Operating Cost of Oil-Shale Processing Alternatives 1/

MINING OPTIONS	RETORTING OPTIONS				
	First generation 1972		Improved first generation, 1976		Second generation, 1980
	7, 45-ft-diam units 3/	Operation 10% above design	7, 60-ft-diam units 4/	28, 60-ft-diam units	7, 60-ft-diam units 5/
Room and pillar					
Capital investment, million $	$138	$142	$197	$724	$204
Annual operating cost, million $	26.8	28.1	35.7	134	36.3
Cost per barrel: 2/					
Before by-product credit, $	2.10	1.99	1.57	1.48	1.52
After by-product credit, $	1.49	1.39	0.97	0.87	0.55
Improved room and pillar					
Capital investment, million $	142	146	203	748	210
Annual operating cost, million $	25.4	26.5	33.2	124	33.8
Cost per barrel: 2/					
Before by-product credit, $	1.99	1.88	1.46	1.36	1.41
After by-product credit, $	1.38	1.28	0.85	0.76	0.44
Open pit					
Capital investment, million $	138	141	196	721	204
Annual operating cost, million $	26.6	27.8	35.3	133	35.9
Cost per barrel: 2/					
Before by-product credit, $	2.08	1.98	1.56	1.46	1.50
After by-product credit, $	1.47	1.37	0.95	0.85	0.53
Improved open pit					
Capital investment, million $	139	143	199	730	206
Annual operating cost, million $	24.2	25.1	31.1	115	31.6
Cost per barrel: 2/					
Before by-product credit, $	1.89	1.79	1.37	1.27	1.32
After by-product credit, $	1.28	1.18	0.76	0.66	0.35
Advanced cut and fill					
Capital investment, million $	148	152	214	791	221
Annual operating cost, million $	23.7	24.7	30.3	112	30.9
Cost per barrel: 2/					
Before by-product credit, $	1.86	1.75	1.33	1.24	1.29
After by-product credit, $	1.25	1.15	0.72	0.63	0.32

1/ Capital investment includes working capital and operating cost includes depreciation, but no allowance is made for Federal income tax, cost of capital, or return on investment (Note difference in Table 3)

2/ Cost per barrel is in terms of semi-refined shale oil and 1966 dollars

3/ 35,020 barrels per day

4/ 62,265 barrels per day

5/ 65,540 barrels per day

Table 3 - Summary Statistics 1/

	Case 1 First generation retort room and pillar mine		Case 2 Improved first generation retort, impr. room and pillar mine		Case 3 Improved first generation retort, impr. open mine		Case 4 Second generation retort, cut and fill mine	
Size of plant: Semi-refined oil, barrels-per-day	35,020		62,265		62,265		65,540	
Shale for 20 years, million tons	440		780		780		780	
	1966	1969	1966	1969	1966	1969	1966	1969
A. Capital investment, millions of dollars	138	152	203	223	199	218	221	240
B. Operating cost, millions of dollars	18.4	23.0	21.7	24.4	20.0	22.6	17.1	20.8
C. Market value of product, dollars: Semi-refined oil, per barrel	3.08	3.33	3.08	3.33	3.08	3.33	3.08	3.33
By-products, per barrel	.61	.41	.61	.41	.61	.41	.97	.77
Total, per barrel	3.69	3.74	3.69	3.74	3.69	3.74	4.05	4.10
D. At 12% discount rate, dollars: Cost of shale oil and by-product at zero resource value, per barrel	3.59	3.97	2.73	2.88	2.61	2.73	2.55	2.88
E. Discount rate at which resource has zero value when products have 1966 market value, percent	13	9	19	16	20	17	22	20

1/ Operating cost includes depreciation and excludes profit (Note difference in Table 2)

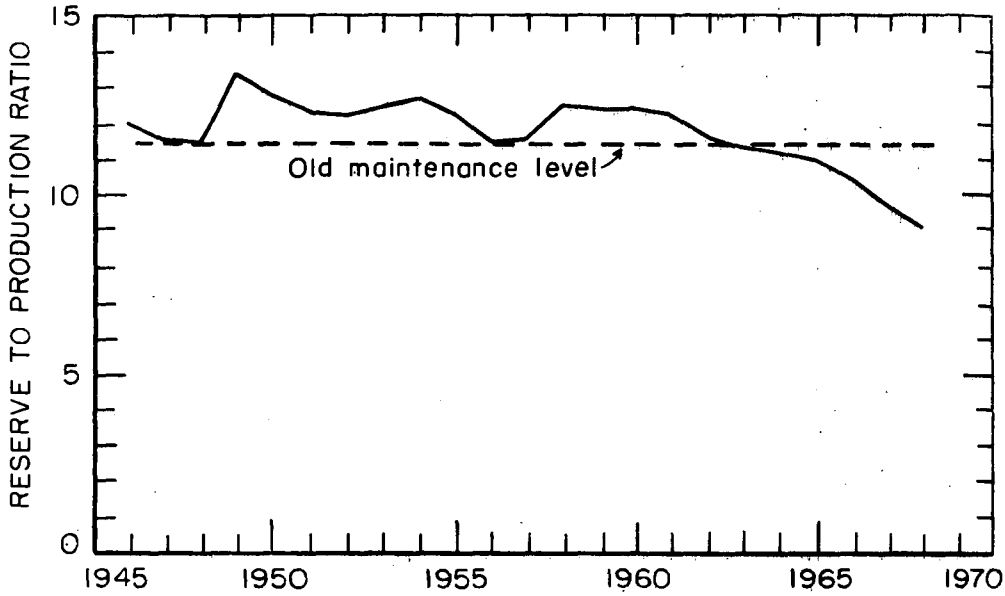

Figure I - Trends in the reserve to production ratio 1945-1968

L-11575

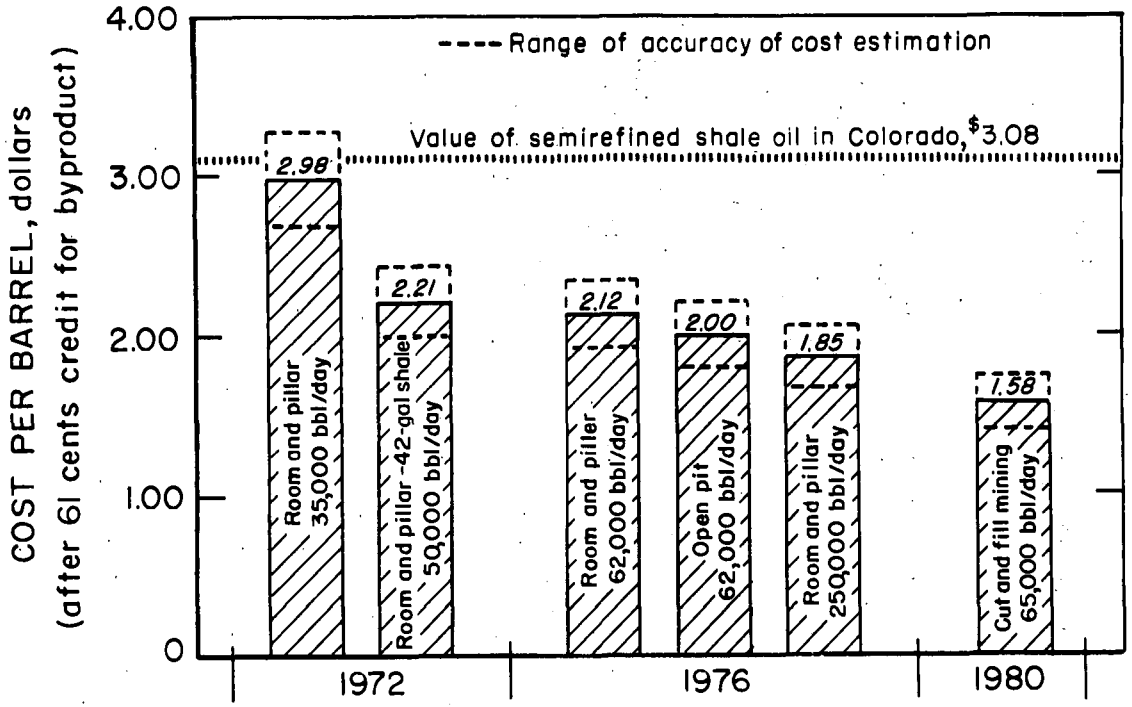

Figure 2-Cost of shale oil at zero resource value using aboveground gas combustion retorting (12 percent discounted cash flow) 30 gallon shale (unless noted)

L-11576

COMPARATIVE ECONOMICS OF TAR SANDS CONVERSION PROCESSES

Paul V. Roberts and Russell C. Phillips
Stanford Research Institute
Menlo Park, California 94025

The tar sands resource is the only solid fuel resource currently being converted to liquid fuels in North America on a large scale. A 45,000 B/CD syncrude plant based on tar sands is currently in operation in the Athabasca region of Alberta. The major steps in conversion of tar sand to syncrude are (1) surface mining of tar sands, (2) hot water extraction of bitumen from mined tar sands, and (3) upgrading of bitumen by coking or hydrovisbreaking followed by hydrotreating of distillates.

The economics of a combined tar sands mining and conversion venture have been analyzed. It was found that tar sands mining costs, bitumen recovery efficiencies, choice of upgrading process, price of syncrude product, and royalty payments all significantly affect the discounted cash flow rate of return from an integrated venture. Results are presented at a level of 50,000 B/SD syncrude production and effects of the factors listed above are discussed. Effect of changing the scale of operations is also discussed.

AN EVALUATION OF TONNAGE OXYGEN PLANTS

Sidney Katell and Paul Wellman

Bureau of Mines
U.S. Department of the Interior
Morgantown, West Virginia

SUMMARY

Tonnage oxygen plants have increased in size and are available today in the 100- to 1,400-ton-per-day range. The capital investment requirements and estimated selling price are investigated in this study.

INTRODUCTION

Interest in the production of synthetic liquid and gaseous fuels has intensified so that several systems have reached the point where prototype plants are being installed or are being considered for installation. In many of these systems high-purity oxygen is a requirement, whether it be in the direct gasification of coal, oil, or shale, or for the production of hydrogen for the hydrogasification or hydrogenation of such raw materials.

DISCUSSION

A previous paper explored the subject of oxygen plant costs;[1] however, a major change has occurred since then--the size of the oxygen plant that can be built today is much larger. The present study takes into account the capital investment requirements and the production costs of these larger units and updates the data contained in the earlier study.

The parameters of the present study are as follows:

1. Location of plant: Ohio Valley.
2. Size of plant: 100 to 1,400 tons per day.
3. Purity: 99.5 percent.
4. Pressure specification: atmospheric and 450 psig.
5. Process employed: low pressure cycle.
6. Type of compressors: electric drive.
7. Cost of available power: $0.00675 per kilowatt-hour.

Figure 1 shows the relationship between power requirements and plant capacity for the two pressures set up as a parameter. Since the production process is the same, the difference in the two curves is the power required to compress the oxygen to 450 psig discharge pressure.

Figure 2 presents the capital investment requirements for the plants ranging in size from 100 to 1,400 tons per day.

1/ Katell, Sidney, and John H. Faber. Cost of Tonnage Oxygen. BuMines Inf. Circ. 7939, 1960, 6 pp.

Table 1 presents the method used in determining the cost of operation on an annual basis for a 500-ton-per-day plant with the oxygen produced at a discharge pressure of 450 psig. The calculation is typical of the several made to establish the curves shown in figure 3. As noted direct labor costs are assumed at $4 per hour, annual onstream time as 350 days per year, and depreciation at 15 years on a straight-line basis.

Using the discounted cash flow rate of return of 12 percent as a criterion for return on investment, the typical calculation is shown in table 2 and the values obtained are plotted in figure 4.

TABLE 1

Oxygen Plant
500 Tons Per Day
Oxygen Compressed to 450 PSIG

Operating Cost

	Annual cost, dollars
Direct costs:	
Power.....8,670 kwhr/hr x 8,400 hr/yr x $0.00675/kwhr	491,600
Cooling water....135 M gal/hr x 8,400 hr/yr x $0.020/M gal.....	22,700
Direct labor: 60 hr/day at $4 per hour.....	87,600
Supervision @ 15 percent.....	13,100
Plant maintenance @ 2 percent of investment.....	88,000
Payroll overhead @ 25 percent of payroll.....	38,200
Operating supplies @ 20 percent of plant maintenance....	17,600
Total direct cost.....	758,800
Indirect costs:	
40 percent of labor, maintenance, and supplies.....	82,500
Fixed costs:	
Taxes and insurance @ 2 percent of investment.....	88,000
Depreciation @ 6.66 percent of investment.....	293,300
Total annual operating cost.....	1,222,600

Annual production = 500 x 350 = 175,000 tons

Cost, dollars per ton of oxygen = 1,222,600 ÷ 175,000 = $6.99

TABLE 2

Oxygen Plant
500 Tons Per Day
Oxygen Compressed to 450 PSIG

Financial Analysis, DCF at 12 Percent

Discounted cash flow, n = 15 years (life of plant)
i = 12 percent per year

$$P = R \frac{(1 + i)^n - 1}{i (1 + i)^n}$$

P/R = 4.47335/0.656826 = 6.81086

R = $4,400,000/6.81086 = $646,000

Net profit = R - Depreciation = $352,700
With Federal Income Tax @ 50 percent,
Gross profit = 2 x $352,700 = $705,400
Sales = Gross profit + operating cost = $1,928,000
Selling price, dollars per ton oxygen = $1,928,000/175,000 = $11.02

Capital investment = P = $4,400,000

Sales - 175,000 tpy x $11.02 per ton	$1,928,000
Operating cost	1,222,600
Gross profit	705,400
Federal Income Tax at 50 percent	352,700
Net profit	352,700
Cash flow:	
Depreciation	293,300
Net profit	352,700
Total positive cash flow = R =	646,000

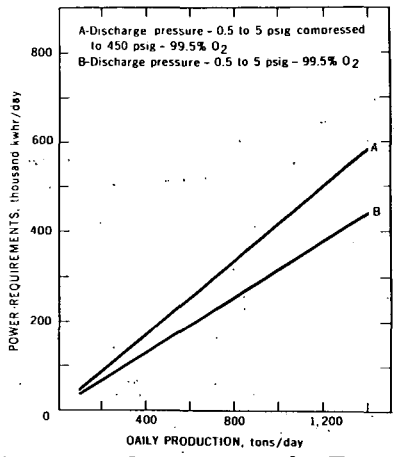

FIGURE 1. - Power Requirements for Tonnage Oxygen Plants. Daily Production vs. Power Requirements.

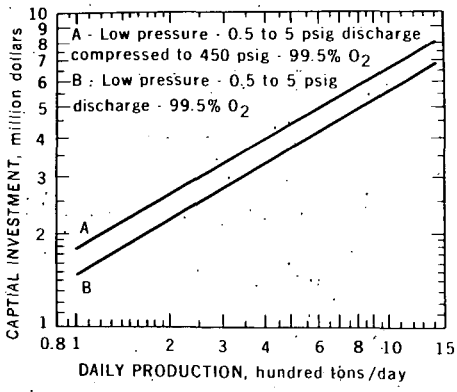

FIGURE 2. - Oxygen Plant. Capital Investment vs. Daily Production.

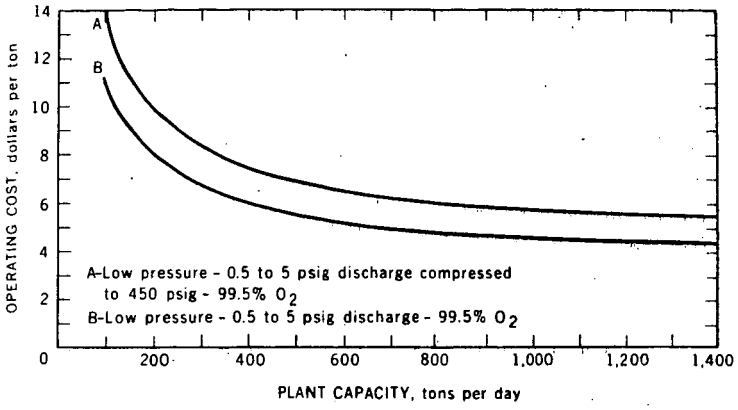

FIGURE 3. - Oxygen Plant. Operating Cost vs. Daily Production.

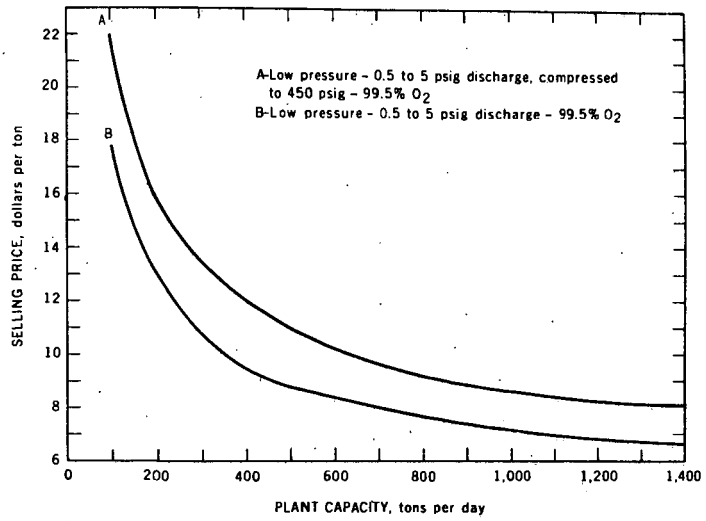

FIGURE 4. - Oxygen Plant. Selling Price vs. Daily Production.