US006720769B2

(12) **United States Patent**
Gerald, II. et al.

(10) **Patent No.: US 6,720,769 B2**
(45) **Date of Patent: Apr. 13, 2004**

(54) **ROTATIONAL EXCHANGE GRADIENT IMAGER FOR IN SITU MAGNETIC RESONANCE ANALYSES IN ULTRACENTRIFUGE SEDIMENTATION OF BIOLOGICAL MATERIALS AND RHEOLOGY INVESTIGATIONS**

(75) Inventors: **Rex E. Gerald, II.**, Brookfield, IL (US); **Robert J. Klingler**, Westmont, IL (US); **Jerome W. Rathke**, Lockport, IL (US)

(73) Assignee: **The University of Chicago**, Chicago, IL (US)

(*) Notice: Subject to any disclaimer, the term of this patent is extended or adjusted under 35 U.S.C. 154(b) by 0 days.

(21) Appl. No.: **10/177,189**

(22) Filed: **Jun. 21, 2002**

(65) **Prior Publication Data**

US 2003/0052678 A1 Mar. 20, 2003

Related U.S. Application Data

(60) Provisional application No. 60/308,412, filed on Jul. 27, 2001.

(51) **Int. Cl.**[7] **G01V 3/00**
(52) **U.S. Cl.** **324/318**
(58) **Field of Search** 324/307, 309, 324/318, 322

(56) **References Cited**

U.S. PATENT DOCUMENTS

4,739,270 A	*	4/1988	Daugaard et al.	324/321
4,859,949 A	*	8/1989	McKenna	324/321
5,045,793 A		9/1991	Rathke	
5,159,271 A	*	10/1992	Llor	324/321
5,574,370 A		11/1996	Woelk et al.	
5,644,235 A	*	7/1997	Baltusis	324/321
5,729,142 A	*	3/1998	Baltusis	324/321
5,754,048 A	*	5/1998	Bielecki	324/321
6,046,592 A		4/2000	Rathke et al.	
6,191,583 B1		2/2001	Gerald, II et al.	
6,204,665 B1	*	3/2001	Triebe et al.	324/318
6,538,444 B2	*	3/2003	Gerald et al.	324/318

OTHER PUBLICATIONS

Rex E. Gerald II et al., "Rotational Exchange Gradient Imager Invention", Argonne National Laboratory Chemical Technology Division, 42nd Rocky Mountain Conference on Analytical Chemistry—Jul. 30–Aug. 3, 2000; Denver CO; web page http://www.cmt.anl.gov.*

"Angular Flow in Toroid Cavity Probes" by Peter Trautner et al., Journal of Magnetic Resonance 151, 1–7 2001.

* cited by examiner

Primary Examiner—Christopher W. Fulton
Assistant Examiner—Dixomara Vargas
(74) *Attorney, Agent, or Firm*—Joan Pennington

(57) **ABSTRACT**

A detecting method and detector expands the capabilities of Nuclear Magnetic Resonance (NMR) analysis. A Rotational Exchange Gradient Imager (REGI) allows for real-time, in situ investigation of materials subjected to the effects of centrifugal force by NMR analysis. The REGI comprises a cylindrical stator formed of an electrically conductive, non-magnetic material, a rotor contained in the cylindrical stator formed of an electrically non-conductive, non-magnetic material, and a conductor located along a central axis of the cylindrical stator. A sample is contained within the rotor. The stator and central conductor serve to generate the RF magnetic field for NMR analysis. The rotor containing the sample is rotated within a stable air bearing formed between the cylindrical stator and rotor.

20 Claims, 9 Drawing Sheets

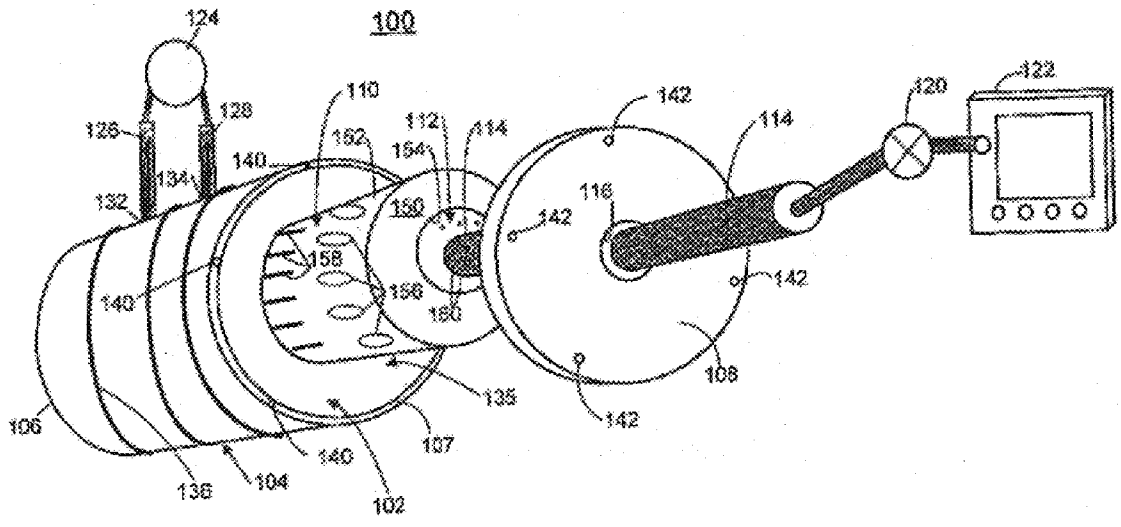

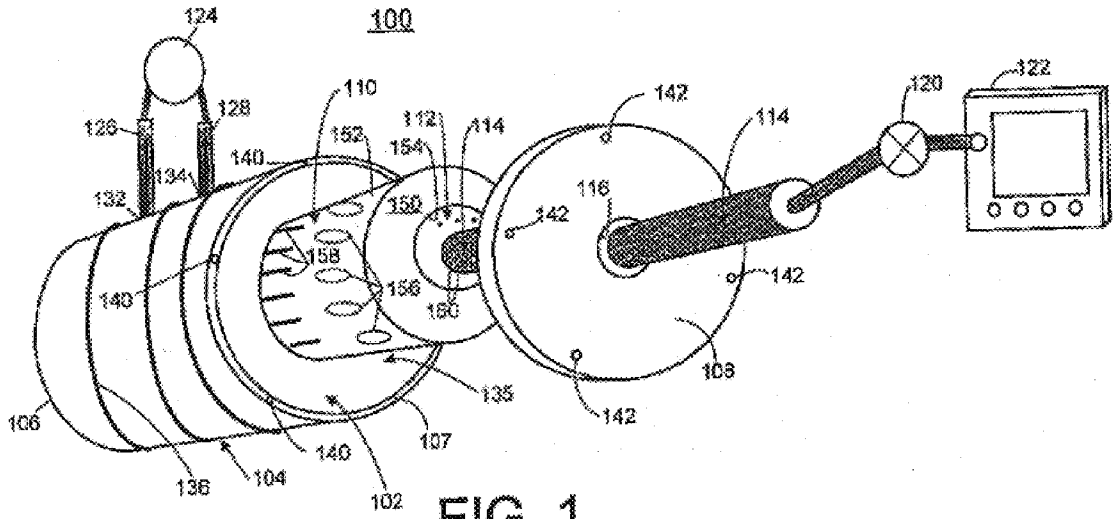
100
124
126
128
134
132
110
152
140
112
154
114
150
158
156
160
142
116
114
120
122
142
142
108
135
106
136
104
140
107
102

FIG. 1

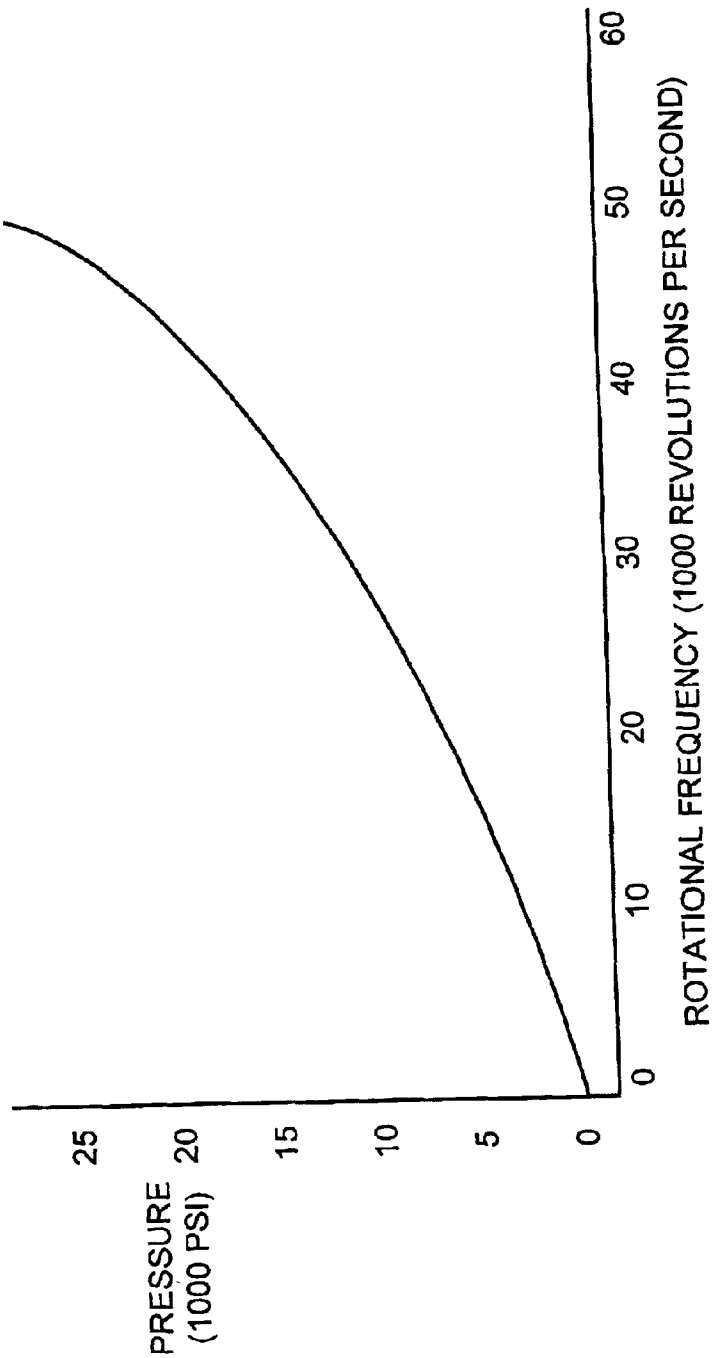
PRESSURE
(1000 PSI)
25
20
15
10
5
0
0
10
20
30
40
50
60
ROTATIONAL FREQUENCY (1000 REVOLUTIONS PER SECOND)

FIG. 2

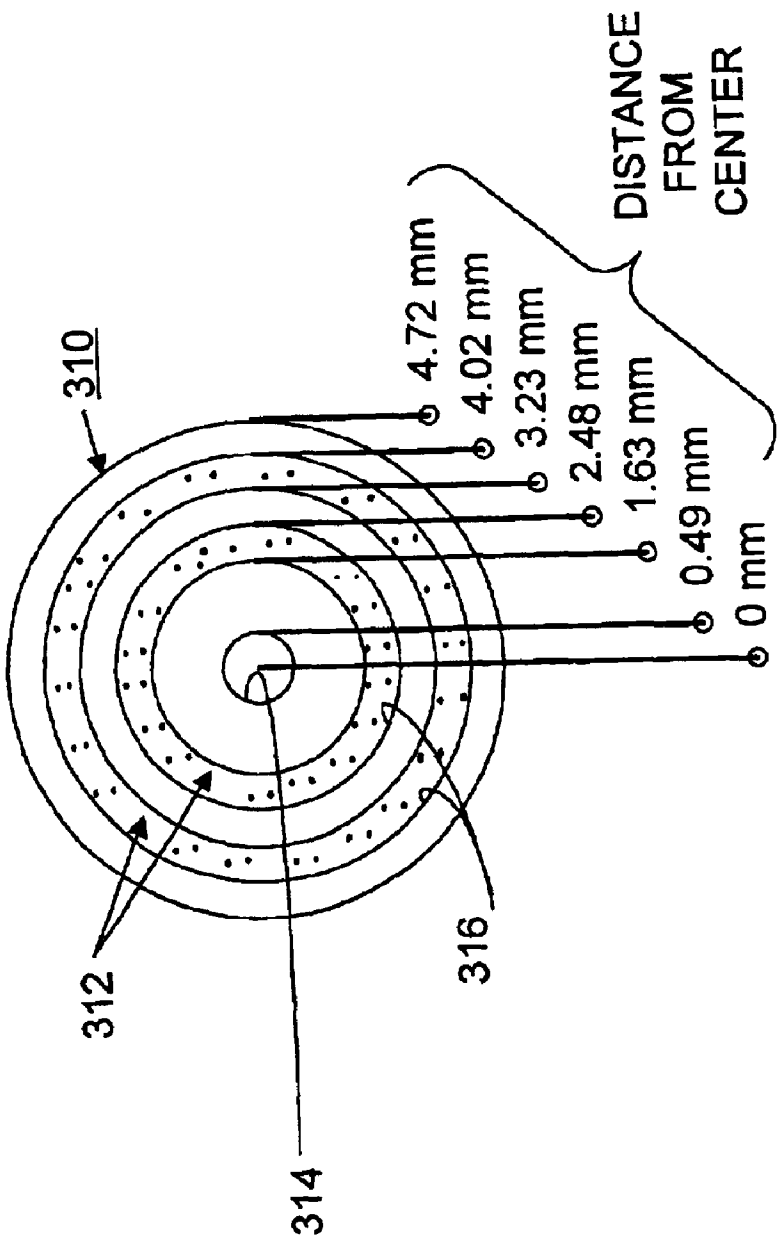
310
312
314
316
DISTANCE FROM CENTER
4.72 mm
4.02 mm
3.23 mm
2.48 mm
1.63 mm
0.49 mm
0 mm

FIG. 3

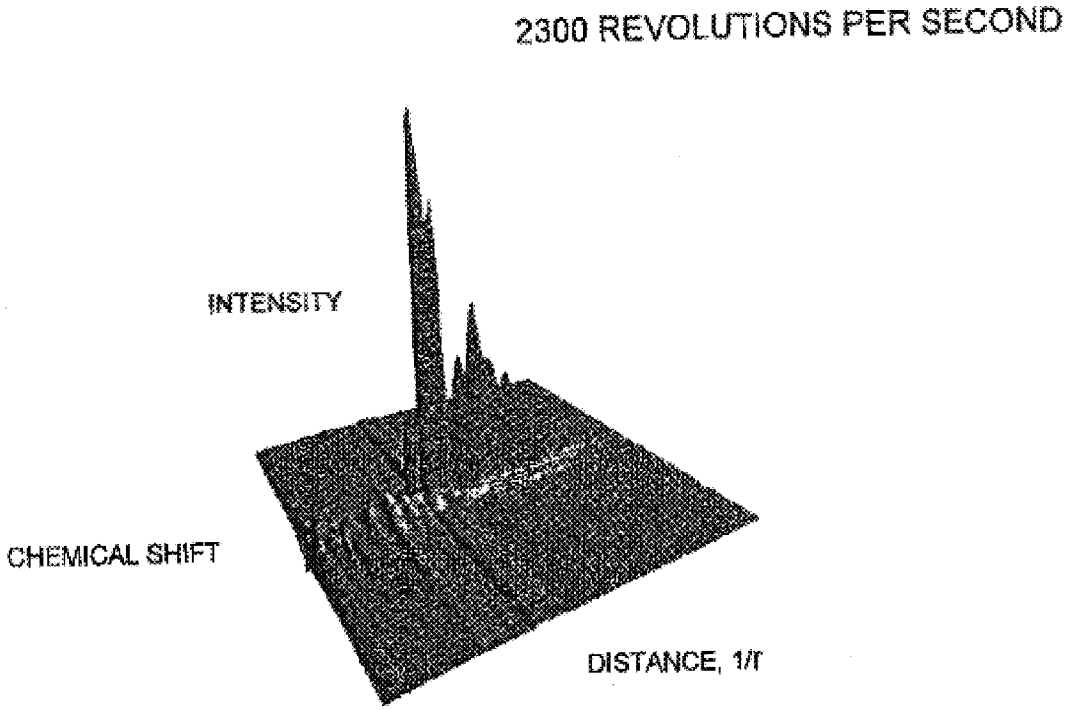
2300 REVOLUTIONS PER SECOND
INTENSITY
CHEMICAL SHIFT
DISTANCE, 1/r

FIG. 4

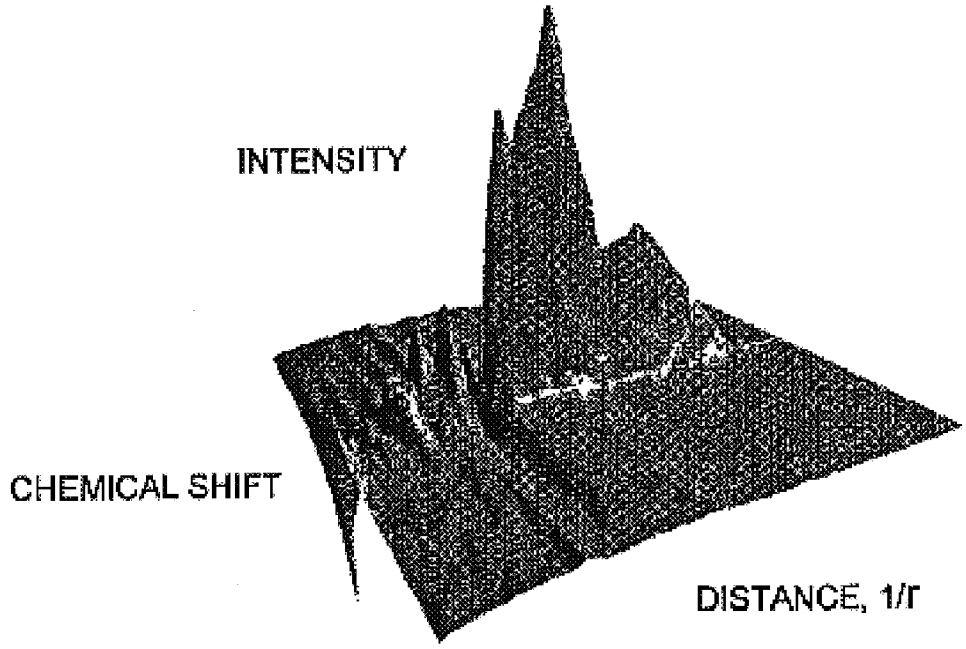

FIG. 5

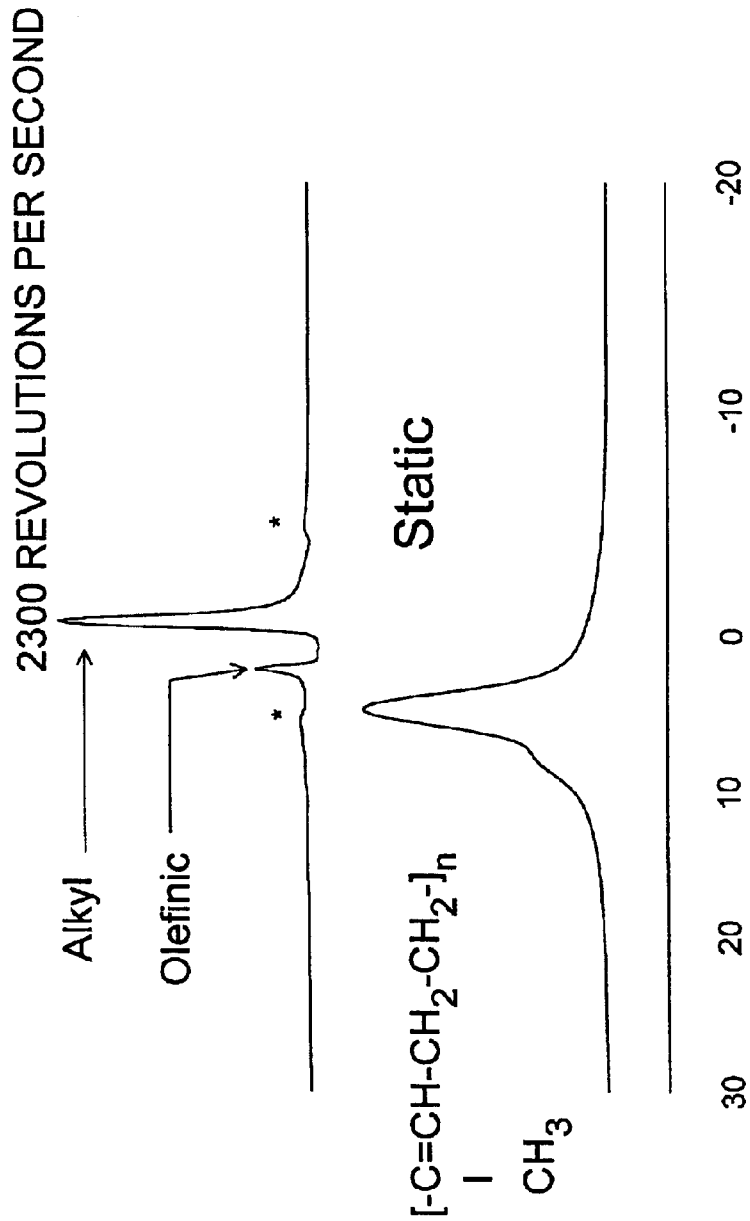
2300 REVOLUTIONS PER SECOND
Alkyl
Olefinic
*
*
Static
[-C=CH-CH2-CH2-]n
CH3
30
20
10
0
-10
-20
CHEMICAL SHIFT (PPM)

FIG. 6

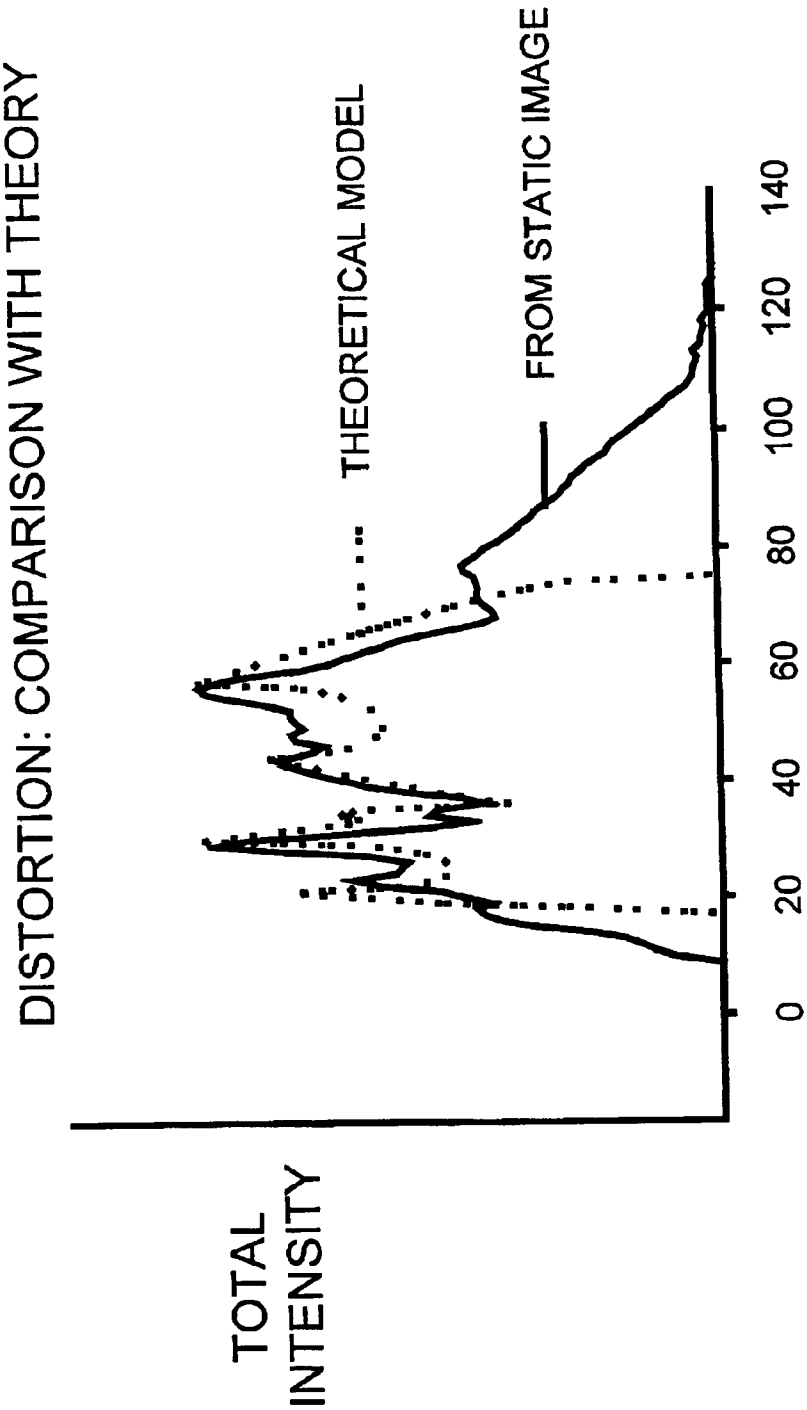
DISTORTION: COMPARISON WITH THEORY
THEORETICAL MODEL
FROM STATIC IMAGE
TOTAL INTENSITY
0
20
40
60
80
100
120
140
DISTANCE, 1/r

FIG. 7

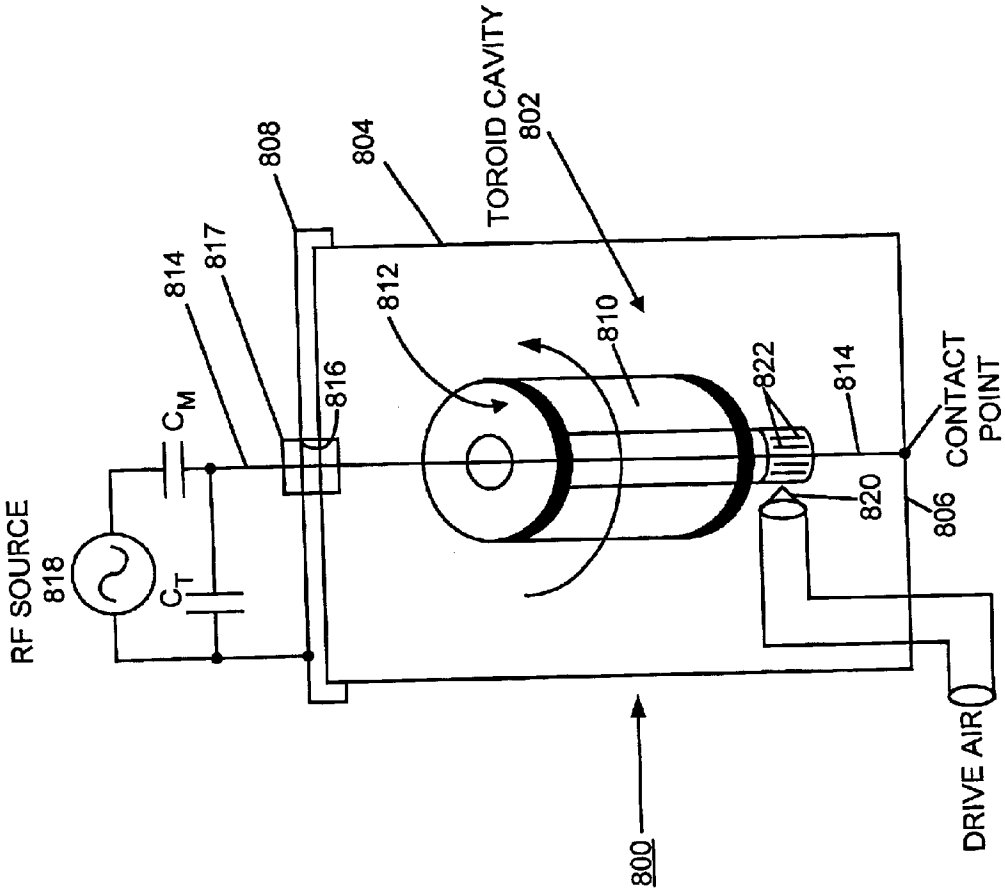
TOROID CAVITY
802
804
808
814
817
812
810
816
822
814
CONTACT POINT
806
820
C_M
C_T
RF SOURCE
818
DRIVE AIR
800

FIG. 8

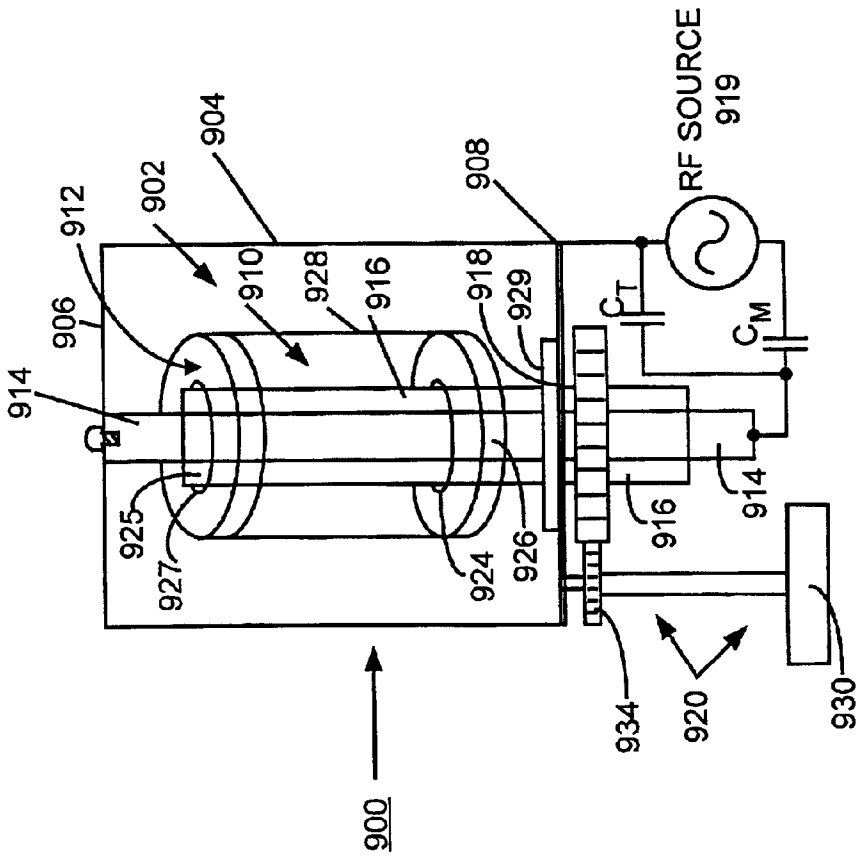
RF SOURCE
919
904
902
912
908
910
928
916
918
929
906
914
925
927
924
926
916
914
934
920
930
900

FIG. 9

ROTATIONAL EXCHANGE GRADIENT IMAGER FOR IN SITU MAGNETIC RESONANCE ANALYSES IN ULTRACENTRIFUGE SEDIMENTATION OF BIOLOGICAL MATERIALS AND RHEOLOGY INVESTIGATIONS

This application claims the benefit of U.S. Provisional Application No. 60/308,412, filed on Jul. 27, 2001.

CONTRACTUAL ORIGIN OF THE INVENTION

The United States Government has rights in this invention pursuant to Contract No. W-31-109-ENG-38 between the United States Government and Argonne National Laboratory.

FIELD OF THE INVENTION

The present invention relates nuclear magnetic resonance (NMR) imaging; and more particularly, to a novel Rotational Exchange Gradient Imager (REGI) and methods for in situ magnetic resonance analyses, for example, in ultracentrifuge sedimentation of biological materials and rheology investigations of soft matter.

DESCRIPTION OF THE RELATED ART

Nuclear magnetic resonance (NMR) analysis is a powerful method by which to determine chemical structures and to examine reaction dynamics in a diversity of chemical and biochemical systems.

For example, U.S. Pat. No. 5,574,370, issued Nov. 12, 1996 to Woelk et al., discloses a toroid cavity detection (TCD) system for determining the spectral properties and distance from a fixed point for a sample using Nuclear Magnetic Resonance. The detection system consists of a toroid with a central conductor oriented along the main axis of the toroidal cylinder and parallel to a static uniform magnetic field, B_0. An RF signal is inputted to the central conductor to produce a magnetic field B_1 perpendicular to the central axis of the toroid and whose field strength varies as the inverse of the radial position within the toroid. The toroid cavity detection system can be used to encapsulate a sample, or the detection system can be perforated to allow a sample to flow into the detection device or to place the samples in specified sample tubes. The central conductor can also be coated to determine the spectral properties of the coating and the coating thickness. The sample is then subjected to the respective magnetic fields and the responses measured to determine the desired properties.

U.S. Pat. No. 6,046,592, issued Apr. 4, 2000 to Rathke et al., discloses a near-electrode imager for employing nuclear magnetic resonance imaging to provide in situ measurements of electrochemical properties of a sample as a function of distance from a working electrode. The near-electrode imager uses the radio frequency field gradient within a cylindrical toroid cavity resonator to provide high-resolution nuclear magnetic resonance spectral information on electrolyte materials.

U.S. Pat. No. 6,191,583, issued Feb. 20, 2001 to Gerald II, discloses a toroid cavity detector that includes an outer cylindrical housing through which extends a wire along the central axis of the cylindrical housing from a closed bottom portion to the closed top end of the cylindrical housing. In order to analyze a sample placed in the housing, the housing is placed in an externally applied static main homogeneous magnetic field (B_0). An RF current pulse is supplied through

the wire such that an alternately energized and de-energized magnetic field (B_1) is produced in the toroid cavity. The field B_1 is oriented perpendicular to the field B_0. Following the RF current pulse, the response of the sample to the applied field B_0 is detected and analyzed. In order to minimize the detrimental effect of probe ringing, the cylindrically shaped housing is elongated sufficiently in length so that the top and bottom portions are located in weaker, fringe areas of the static main magnetic field B_0. In addition, a material that tends to lessen the effect of probe ringing is positioned along the top and bottom ends of the toroid cavity. In another embodiment, a plug is positioned adjacent the inside of the top and bottom ends of the toroid cavity so that the sample contained in the toroid cavity is maintained in the strongest and most homogeneous region of the static magnetic field B_0.

The subject matter of each of the U.S. Pat. Nos. 5,574,370, 6,046,592, and 6,191,583 is incorporated herein by reference.

A special type of NMR detector, a Magic Angle Spinning NMR (MAS NMR) detector can be used to examine solids. Analysis of solid materials by MAS NMR requires rapid rotation of the sample about the axis that defines an angle of 54.7° with respect to the static magnetic field B_0. Other researchers have used magic angle spinning NMR to study heterogeneous catalyzed reactions at elevated pressures. Several technical problems, however, limit the use of this technique. For flow-through reactions, which include most industrial processes, the need for rotating seals limits attainable pressures to ~80 pounds per square inch (psi) (~5.5 kPa). Glass, plastic, or ceramic pressure vessels are brittle and further limit pressures to less than 100 psi (~6.9 kPa). Metal containers are thus necessary for the high pressures used in industrial applications, but they require that a radio frequency (RF) detector coil be positioned inside the container. Enclosing the RF coil in a metal container complicates the apparatus significantly because the electromagnetic field generated by the RF coil strongly interacts with the electronically conductive surfaces of the metal container. This electromagnetic interaction reduces the sensitivity and the overall performance of the detector.

At this time, several technical issues including the need for rotating seals and high pressures, and the like, limit the use of this high pressure MAS NMR technique. In situ investigations by NMR spectroscopy and imaging of the processes of sedimentation of proteins, deformations of soft materials, lubrication, and heterogeneous catalysis under high flow-through gas pressure have not been performed because a suitable device is not available.

A principal object of the present invention is to provide a novel Rotational Exchange Gradient Imager (REGI) for in situ nuclear magnetic resonance analyses, for example, in ultracentrifuge sedimentation of biological materials and rheology investigations of soft matter.

It is another object of the present invention to provide methods for in situ nuclear magnetic resonance analyses, for example, in ultracentrifuge sedimentation of biological materials and rheology investigations of soft matter.

It is another object of the present invention to provide a Rotational Exchange Gradient Imager (REGI) suitable for in situ investigations of the sedimentation process and constituent analyses of protein mixtures.

It is another object of the present invention to provide a Rotational Exchange Gradient Imager (REGI) suitable for investigations of soft matter under conditions where the material is deformed by the application of a large centrifugal force.

It is another object of the present invention to provide a Rotational Exchange Gradient Imager (REGI) suitable for spectroscopic analysis of a lubricant layer at the interfaces of a metal sleeve bearing under actual operating conditions.

It is another object of the present invention to provide a Rotational Exchange Gradient Imager (REGI) suitable for investigations of solid catalysts under conditions of high pressure and temperature, and flow of reactant gases through a catalyst bed.

It is another object of the present invention to provide a Rotational Exchange Gradient Imager (REGI) and method for implementing such Rotational Exchange Gradient Imager (REGI) substantially without negative effect and that overcome some disadvantages of prior art arrangements.

SUMMARY OF THE INVENTION

In brief, a novel detector and detecting methods are provided that expand the capabilities of Nuclear Magnetic Resonance (NMR) analysis and NMR analytical methods, allowing non-conventional materials to be examined using NMR in real time. A novel Rotational Exchange Gradient Imager (REGI) enables, for example, in situ magnetic resonance analyses in ultracentrifuge sedimentation of biological materials and rheology investigations of soft matter. The Rotational Exchange Gradient Imager (REGI) allows for real-time, in situ investigation of materials subjected to the effects of a centrifugal force by Nuclear Magnetic Resonance (NMR) analyses. The REGI comprises a cylindrical stator formed of an electrically conductive, non-magnetic material, a rotor contained in the cylindrical stator formed of an electrically non-conductive material, and a conductor located along a central axis of the cylindrical stator. A sample is contained within the rotor. The stator and central conductor serve to generate the RF magnetic field for NMR analysis. The rotor containing the sample is rotated within a stable air bearing formed between the cylindrical stator and rotor.

In a first embodiment of the invention, the rotor is driven by a high-pressure carrier gas jet containing reactant gas delivered to the inside of the stator via a closed loop formed of a pump and a pair of tubes, each tube coupled between the pump and a respective opening in the cylindrical stator. The central conductor and the cylindrical stator and rotor are held at a predefined magic angle relative to an externally applied static uniform magnetic field B_0. Throughout the analysis, the sample contained within the rotor is rotated by the high-pressure carrier gas jet containing reactant gas, enabling accurate and precise control of the rotation frequency.

In a second embodiment of the invention, an air jet drives the rotor. In this embodiment, the central conductor is oriented along the main axis of the cylindrical stator and rotor and parallel to the static uniform magnetic field B_0. An RF signal is inputted to the central conductor to produce a magnetic field B_1 perpendicular to the central axis of the cylindrical stator and rotor. The produced magnetic field B_1 is perpendicular to the static uniform magnetic field B_0 and the predefined magic angle is not used.

In a third embodiment of the invention, a mechanical drive assembly drives the rotor. The mechanical drive assembly is coupled to the rotor and includes a drive motor and a drive gear. As in the second embodiment, a produced magnetic field B_1 is perpendicular to the static uniform magnetic field B_0 and the predefined magic angle is not used.

In accordance with features of the invention, the REGI allows real time NMR analysis and imaging of processes, enabling fast, easy, accurate, and precise adjustment of the rotation frequency and duration of the NMR analysis. REGI allows in situ NMR analysis and imaging of processes not possible before; for example, sedimentation of proteins, deformations of soft materials, lubrication, and heterogeneous catalysis under high flow-through gas pressure. The Rotational Exchange Gradient Imager (REGI) can provide highly detailed information, through NMR spectroscopy and imaging, in four diverse fields of science: molecular biology, rheology, tribology, and heterogeneous catalysis.

BRIEF DESCRIPTION OF THE DRAWINGS

The present invention together with the above and other objects and advantages may best be understood from the following detailed description of the preferred embodiments of the invention illustrated in the drawings, wherein:

FIG. **1** is a schematic diagram illustrating a Rotational Exchange Gradient Imager (REGI) of the preferred embodiment;

FIG. **2** is a diagram illustrating pressure with respect to the vertical axis and frequency with respect to the horizontal axis obtained with the Rotational Exchange Gradient Imager (REGI) of FIG. **1**;

FIG. **3** illustrates an alternative rotor and sample for use in the Rotational Exchange Gradient Imager (REGI) of FIG. **1** of the preferred embodiment;

FIGS. **4** and **5** illustrates results obtained with the Rotational Exchange Gradient Imager (REGI) of FIG. **1** of the preferred embodiment at a spin rate of 2300 revolutions per second for comparison with static results obtained without rotation of a sample using the rotor of FIG. **3** with chemical shift (PPM) shown with respect to one horizontal axis, distance through the sample shown with respect to the other horizontal axis, and intensity shown with respect to the vertical axis;

FIG. **6** illustrates results obtained with the Rotational Exchange Gradient Imager (REGI) of FIG. **1** of the preferred embodiment at a spin rate of 2300 revolutions per second for comparison with the static results obtained without rotation of a sample with chemical shift (PPM) shown with respect to the horizontal axis and intentsity shown with respect to the vertical axis;

FIG. **7** is a diagram illustrating total intensity with respect to the vertical axis and distance with respect to the horizontal axis obtained with the Rotational Exchange Gradient Imager (REGI) of FIG. **1** of the preferred embodiment for comparison with theoretical curve;

FIG. **8** is a schematic diagram illustrating a second embodiment of a Rotational Exchange Gradient Imager (REGI) of the preferred embodiment; and

FIG. **9** is a schematic diagram illustrating a third embodiment of a Rotational Exchange Gradient Imager (REGI) of the preferred embodiment.

DETAILED DESCRIPTION OF THE PREFERRED EMBODIMENTS

In accordance with features of the invention, a new and useful analytical device, a Rotational Exchange Gradient imager (REGI) enables real-time, in situ investigations by nuclear magnetic resonance (NMR) of materials subjected to the effects of a centrifugal force. The REGI detector can provide highly detailed information, through NMR spectroscopy and imaging, in four diverse fields of science: molecular biology, rheology, tribology, and heterogeneous catalysis. The REGI provides for the first-time highly infor-

mative NMR spectra of systems that are difficult to investigate under actual system conditions.

In accordance with features of the invention, three embodiments for the REGI are provided as illustrated and described with respect to FIGS. **1**, **8** and **9**. The REGI has diverse potential applications, including the development of improved fuel cells and processes for the petroleum and chemical industries. In molecular biology the REGI is suitable for in situ investigations of the sedimentation process and constituent analyses of protein mixtures. In rheology the REGI is suitable for investigations of soft matter under conditions where the material is deformed by the application of a large centrifugal force. In tribology the REGI is suitable for spectroscopic analysis of a lubricant layer at the interfaces of a metal sleeve bearing under actual operating conditions. In heterogeneous catalysis the REGI is suitable for investigations of solid catalysts under conditions of high pressure and temperature, and flow of reactant gases through the catalyst bed.

Having reference now to the drawings, in FIG. **1** there is shown not to scale a rotational exchange gradient imager (REGI) of the preferred embodiment generally designated by the reference character **100**. As illustrated in FIG. **1**, REGI **100** is arranged as a magic angle spinning toroid cavity detector (MAS TCD) imager including a high-pressure reactant gas used as a rotational drive source.

REGI **100** includes a toroid cavity generally designated by **102**. Toroid cavity **102** is defined by a stator **104** in the form of a hollow cylinder including a base **106** at a closed end and an opposite open end **107** receiving a cap **108**. Cap **108** is shown separated from the cylindrical stator **104** in FIG. **1**. When assembled, cap **108** is secured to the cylindrical stator **104**, for example, by fasteners (not shown) such that an enclosed toroid cavity **102** is formed. A rotor **110** is contained within the stator **104**. A catalyst sample generally designated **112** is contained in the ceramic rotor **110**. The cylindrical stator **104** defines the toroid cavity resonator with an egress tube **114** serving as its central conductor. The central conductor egress tube **114** is a hollow, elongated, electrically conductive tube. The central conductor egress tube **114** is fixedly secured to the stator base **106** and extends along a central, elongated axis of the toroid cavity **102** through an aligned, central aperture **116** in cap **108**.

A bleed-off valve and regulator **120** maintain a reduced pressure in the egress tube **114** and draw off the products of the reaction for analysis by gas chromatography, mass spectrometry, or other methods with an associated instrument **122**. A circulator pump **124** drives the rotor **110** and produces very high pressures. High-pressure carrier gas doped with reactant gases circulates in a closed loop including an entrance tube **126** and an exit tube **128**, each coupled between the circulator pump **124** and the cylindrical stator **104**. The cylindrical stator **104** is drilled or otherwise formed to provide an entrance opening **132** and an exit opening **134** to respectively receive the entrance and exit tubes **126** and **128**. The rotor **110** is propelled by a jet of carrier gas containing one or more reactants and is supported by a gas bearing generally indicated by **135** and rotated at a selected speed, for example, up to 50,000 revolutions per second, around the stationary central conductor egress tube **114**. A heater **136** is mounted on the cylindrical stator **104** for temperature control of the cylindrical stator.

Cylindrical stator **104** is formed of electrically conductive, non-magnetic material having sufficient mechanical strength for high-pressure applications. For example, stator **104** is formed of copper, beryllium copper (BeCu), aluminum, phosphor bronze or titanium. The cap **108** similarly is formed of electrical conductive, non-magnetic material having sufficient mechanical strength for high pressure. The cap **108** can be formed of aluminum, copper or beryllium copper (BeCu). Open end **107** of the cylindrical stator **104** include a plurality of openings **140** aligned with a plurality of corresponding openings **142** provided in the cap **108** for receiving fasteners for mechanically sealing for pressures greater than atmosphere and electrically connecting the cylindrical stator **104** and cap **108** together.

The rotor **110** is formed of an electrically non-conductive, non-magnetic material, such as a ceramic, plastic or glass material. The rotor **110** is an elongated, cylindrical rotor body **150** having an outside surface **152** and an inside surface **154**. The sample **112** is contained inside the cylindrical rotor body **150**. The cylindrical rotor body **150** includes a plurality of apertures **156** extending between the outside surface **152** and the inside surface **154**. The radial rotor apertures **156** allow the high-pressure gas reactant to flow to and through the sample **112**. The cylindrical rotor body **150** includes a plurality of vanes **158** adapted for rotation of the rotor **110** by the jet of high pressure carrier gas containing one or more reactants supplied by the circulating pump **124**. The jet of gas containing one or more reactants rotates the rotor **110** around the central conductor egress tube **114** at a selected rate in a range from 1–50,000 revolutions per second. The rotor **110** rotates around the central conductor egress tube **114** without touching the central conductor egress tube **114** or the cylindrical stator **104**.

The central conductor egress tube **114** is formed of an electrically conductive material, such as, copper or beryllium copper (BeCu). The central conductor egress tube **114** includes a plurality of holes **160** located proximate to the sample **112** to receive products of the reaction from the sample. A flow path for the high-pressure gas reactant is provided through the radial rotor apertures **156**, through the sample **112**, with the central conductor egress tube **114** then supplying the products of the reaction for analysis by gas chromatography, mass spectrometry, or other methods.

In operation to analyze a sample **112** contained in the cylindrical rotor **110**, REGI **100** is placed in an externally applied static uniform magnetic field B_0. The cylindrical stator **104** and central conductor egress tube **114** generate the RF magnetic field B_1 for the NMR analysis. The cylindrical stator **104**, rotor **110** and central conductor egress tube **114** are held at a predefined magic angle with respect to the externally applied static uniform magnetic field B_0. An RF current pulse is supplied through the central conductor egress tube **114** such that the alternately energized and de-energized magnetic field B_1 is produced in the enclosed toroid cylindrical cavity **102**. Following the RF current pulse, the response of the sample to the alternately energized B_1 field is detected and analyzed. REGI **100** is arranged at a predefined magic angle so that the direction of the produced magnetic field B_1 is offset from the static main homogeneous magnetic field B_0 by the magic angle. The axis of rotation is inclined at the magic angle, 54.7° with respect to the direction of the externally applied static uniform magnetic field B_0.

REGI **100** avoids the problem of a metal container interfering with the RF field because the container, cylindrical stator **104** itself generates the RF field. This geometry of REGI **100** has two other significant advantages over a conventional solenoid coil. First, the RF magnetic field B_1 is contained within the cavity **102**, so that it can be generated

more efficiently. The high efficiency increases the sensitivity of the REGI **100**. Second, the strength of the RF magnetic field B_1 decreases with distance from the center of the stator **104**. As a result, the REGI **100** has the capability to record high-resolution NMR spectra for heterogeneous samples as a function of distance on a microscopic scale.

Two characteristics of the REGI **100** allow its use at higher pressures than conventional MAS probe designs. First, the pressure vessel is provided by the stator **104** rather than the rotor **110**, eliminating the need for rotating seals. Second, stator **104** forms a metal pressure vessel. This would be impractical if a conventional coil is used to generate the RF magnetic field, since currents induced in the pressure vessel would interfere with the RF magnetic field. In the REGI **100** the stator **104** defining toroid cavity **102**, serves as a pressure vessel, eliminating that problem.

FIG. **2** illustrates pressure (10^3 psi) with respect to rotation frequency (1000 revolutions per second) obtained with the Rotational Exchange Gradient Imager (REGI) **100** of FIG. **1**. REGI **100** can be used to study the behavior of solids subjected to high stresses. REGI **100** has application in tribology, and rheology because of its ability to generate stresses in solids and semisolids via centrifugal forces. The centrifugal forces in REGI **100** can produce the pressures plotted in FIG. **2**, which were calculated for a 100-μm-thick annular shell of a polymer. The centrifugal forces alone in REGI **100** produce the pressures in the graph of FIG. **2** for a 100-μm-thick annular shell of solid material (powder or an easily compressible monolith) with a density of 1 g/cc and a radius of 2 mm. These conditions are readily obtainable. The stresses vary as the square of the rotation rate, providing a large range of stresses for the currently available range of spin rates. As shown by the solid circles, pressures of 200–1000 psi (1.4–6.9 MPa) are easily obtainable with REGI **100**. The open circles project that stresses from pressures as high as 30,000 psi (207 MPa) can be obtained by using existing commercial rotors. Since stress inside the sample will vary with distance from the center of rotation, a radial image of the NMR spectrum will give changes in the spectrum with respect to stress. A larger variation in stress can be obtained by varying the rotation rate. Significant effects in polymers can be seen for the range of stresses obtainable by REGI **100**.

In NMR, one would like to obtain a spectrum consisting of narrow peaks, since this makes it possible to distinguish closely-spaced peaks and maximize the precision with which the positions of the peaks are measured. When NMR is conducted on fluids or solutions, line widths are typically on the order of 0.1 Hz, which is satisfactory for most applications. With solids, or with macromolecules such as large proteins, the line widths can be much larger, for example, greater than 100 Hz. The causes of line broadening can be understood qualitatively as follows. The spacing between spin energy levels in a nucleus, and so the resonance frequencies associated with transitions between them, vary with the orientation of the molecule containing it. If the molecule is in a liquid or in solution, the molecule is free to rotate in a random, non-coherent manner. If the molecule is not particularly large, its Brownian motion or random and non-coherent motion will rotate the molecule fast enough that these effects are averaged out, so that nuclei in identical environments—in the same position in the same compound, and the like—all resonate at the same frequency and the result is a sharp line. If the molecules are fixed in place, as in a solid, or are so large that their Brownian motion is relatively slow, as in a large protein, then nuclei in different molecules in the sample will resonate at different frequencies as a function of their orientation and the line will be spread out.

An examination of the effects responsible for the change in resonance frequency as a result of orientation shows that most of the averaging out of these effects can be achieved by a coherent rotation about an axis making an angle of 54.7° with the direction of the fixed magnetic field. This angle is the magic angle, and the technique of rotating a sample about this angle is called Magic Angle Spinning (MAS). One area where MAS has been used extensively in the last few years is in the study of reactions involving solid catalysts. Since the processes studied in this way are widely used in the chemical and petroleum industries, researchers hope that studies in this area will bring to light new methods which will be useful to those industries.

Two aspects of industrial catalytic processes combine to make NMR of these processes difficult. First, most industrial processes are flow-through processes, where reactants are constantly streaming into a reaction chamber, and products are constantly being drawn out. Second, the reactions of interest usually take place at high temperatures and pressures. In MAS the probe has to spin during the experiment, and the joints where reactants flow into the probe and products flow out are difficult to seal beyond 80 psi at elevated temperatures.

One effect of rotation is the stress caused by centrifugal forces in the sample. For a powder or for a material with low tensile modulus (that is, a material that can be stretched or compressed easily) the stresses can be calculated as follows. In these cases the centripetal force comes mainly from the resistance of the substance to compression, so inner layers push on the outer layers increasing the pressure they experience. For a cylindrical shell of sample **112** held in a rigid rotor **110** as shown in FIG. **1** the pressure P defined by a force F per unit area A, at a distance r from the center of the cylindrical stator **104** is:

$$P = \frac{F}{A} = \int \frac{dF}{A} = \int_{l}^{r} \omega^2 \rho \cdot r \, dr = \frac{\omega^2 \rho}{2} [r^2]_{r_1}^{r} = \frac{\omega^2 \rho}{2} (r^2 - r_1^2) = \frac{\omega^2 \rho}{2} (r_2^2 - r_1^2)$$

Where r_1 is the inner radius of the sample, r_2 is the outer radius of the sample, ρ is the density of the sample, and ω is the angular frequency of rotation. For a very thin ring of sample this reduces to $\rho=\omega^2\rho \cdot r_1 \Delta r$ (where $\Delta r=r_2-r_1$)

These equations tell us three things. First, the equations give us the magnitude of the stresses involved. For a sample with ρ=1 g/cc, a rotation rate of 10,000 revolutions per second, r_1=2 mm and Δr=0.1 mm, all easily obtainable conditions, the pressure at the outer edge of the sample would be 2200 psi, roughly the yield strength of Teflon and near the yield strength of many other polymers. By examining variations in the NMR spectra with pressure of these compounds we can establish which bonds in the molecules that comprise the sample are affected by the stress. Second, the equations provide the variation of the stress with rotation rate. Third, the equations show that the stress varies with position within the sample, going to zero at its inner edge. Hence, the imaging capability of REGI **100** can be used to obtain changes in the NMR spectrum as a function of pressure.

When an easily compressible fluid, i.e. a gas or a supercritical fluid, is subjected to rotation at high speed, it will be compressed towards the edge of the container until the resulting increase in pressure balances the centrifugal force.

As for any system in thermal equilibrium, the density is given by

$$\rho \propto e^{-V/kt}$$

where V is the potential energy function of the molecules involved, k is Boltzman's constant, and T is the absolute temperature. Supercritical fluids have been shown to behave very much like ideal gasses, i.e. intermolecular forces have very little effect on their behavior. V is therefore effectively only the potential energy arising from the centrifugal forces in the system,

$$V(r) = \int -m\omega^2 r dr = -\frac{1}{2} m\omega^2 r^2$$

(where ω is the angular frequency of rotation and r is the distance from the axis of rotation). The density distribution can be calculated easily from these relationships. To find the expected magnitude of the effect, the calculated density distribution ratio between density at the center and edge of the container for a container 1 cm in diameter filled with carbon dioxide ($m=5.3\times10^{-26}$ kg) is 1.3. This is large enough to be useful, particularly because a density gradient cannot easily be obtained except by rotation and provides an interesting way of studying a number of separations and reactions. Many useful catalysts go into solution in supercritical fluids in the core of micelle structures, which form at a particular density, so that the catalysts would be localized at a particular location in the cell. The density gradient can serve as a shuttle, carrying reactants to the micellular layer and carrying products to different layers determined by their densities. This could also be used to study the effect of the density of a supercritical fluid on reactions between substances in suspension or solution. REGI **100** provides a mechanism for in situ monitoring of the centrifugation process through its imaging capability. REGI **100** allows the use of NMR to study processes occuring during centrifugation. For example, it is now thought that some protein complexes dissociate and reassociate. REGI **100** allows the use of a direct NMR method for determining disassociation and reassociation of protein complexes in isolation. NMR analyses of protein complexes of different average molecular weight are achieved by segregation and imaging methods using the REGI **100**.

FIG. **3** illustrates an alternative rotor **310** for containing a sample generally designated by **312** for use in the Rotational Exchange Gradient Imager (REGI) **100** of FIG. **1** of the preferred embodiment. As shown in FIG. **3**, rotor **310** has a centrally located hole **314** to accommodate the central conductor **114** and includes vanes (not shown) similarly arranged as rotor **110** for rotation by the drive gas. Rotor **310** is formed with a pair of grooves **316** to contain the sample **312**, for example, of isoprene rubber. Rotor grooves **316** provide two clearly separated areas of sample **312**. Distances from the center of the rotor **310** are shown with the rotor **310**.

FIGS. **4** and **5** illustrate images obtained with the REGI **100** including rotor **310** and the sample **312** of FIG. **3**. In FIGS. **4** and **5**, chemical shift (PPM) is shown with respect to one horizontal axis with distance through the sample, 1/r shown with respect to the other horizontal axis, and intensity shown with respect to the vertical axis. FIG. **4** illustrates an image obtained by REGI **100** at a rotation frequency of 2300 revolutions per second. A stationary image is shown in FIG. **5**.

FIG. **6** illustrates representative spectra obtained with the REGI **100** of FIG. **1** of the preferred embodiment at a spin rate of 2300 revolutions per second for comparison with a static or zero spin rate. In FIG. **6**, chemical shift (PPM) is shown with respect to the horizontal axis and intentsity shown with respect to the vertical axis. FIG. **6** illustrates the ability of REGI **100** to narrow NMR signals in a sample **312** of poly(isoprene) for easy identification of the hydrocarbon species present. The single spectra clearly show that the line narrowing expected from magic angle spinning occurred, making it possible to distinguish two peaks. The broad spectrum observed for the static sample is narrowed and shifted upon rotation of the sample at 2300 revolutions per second. REGI **100** is able to resolve two distinct peaks, corresponding to the alkyl (methyl and methylene) protons at 1.9 ppm and the olefinic protons at 5.4 ppm, in the approximate intensity ratio of 7:1. The enhanced resolution of the different proton signals makes it possible to detect subtle changes in the conformations, dynamics, and packing of molecules subjected to large compressing forces. In FIG. **6**, the asterisks (*) indicate the location of spinning side bands. Sidebands are small but visible, confirming the rotation rate, and a shift in the position of the spectra is evident. This shift is equal to the rotation frequency, and is unique to the present invention REGI **100**. However, the shift in the position of the spectrum obtained with REGI **100** is not possible with existing MAS detectors. This spectral shift due to sample rotation may be used to advantage to distinguish a rotating solid sample from a sample coated on the egress tube **114** and not undergoing rotation. It is commonly the case that the maximum of a spectrum obtained using MAS does not correspond to that of the nonspinning spectrum.

FIG. **7** is a diagram illustrating total NMR intensity with respect to the vertical axis and distance with respect to the horizontal axis obtained with the Rotational Exchange Gradient Imager (REGI) **100** of the preferred embodiment for comparison with the theoretical curve.

The operation of the REGI **100** may be further understood from the following description. The analysis method of REGI **100** uses spatial variation in the RF magnetic field B_1 to reconstruct spatial information, where earlier methods, for example, Magnetic Resonance Imaging (MRI), use variations in the static magnetic field (the B_0 field). Using the B_1 field means that information about the chemical shift is preserved, and the result is a chart showing the response intentsity as a function of the position and chemical shift of the nuclei producing it.

In a toroid cavity probe, the magnitude of the B_1 field varies only with the cylindrical coordinate r, and the direction only with the cylindrical coordinate ϕ. Conventionally, the probe is arranged so that B_1 is everywhere perpendicular to B_0, so that the variation in the direction of the B_1 field is of no consequence, and an image with one spatial direction is the result. When the probe is inclined with respect to B_0 as in REGI **100**, the varying angle between B_0 and B_1 means that the variation of B_1 with both r and ϕ is significant and must be accounted for in the image reconstruction.

In second and third embodiments, for example used for investigations of sedimentations, respective REGI are arranged without the magic angle spinning as illustrated in FIGS. **8** and **9**.

Referring now to FIG. **8**, there is shown a second embodiment of a Rotational Exchange Gradient Imager (REGI) of the preferred embodiment generally designated by the reference character **800**. REGI **800** includes a toroid cavity generally designated by **802**. Toroid cavity **802** is defined by a stator **804** in the form of a hollow metallic cylinder including a base **806** at a closed end and receiving a cap **808**

at an opposite open end. A rotor **810** containing a fluid sample **812** is formed of electrically non-conductive, non-magnetic material and contained within the cylindrical stator **804**. The cylindrical stator **804** defines the toroid cavity resonator with an elongated wire **814** serving as its central conductor. The central conductor **814** is fixedly secured to the stator base **806** and extends along a central, elongated axis of the toroid cavity **802** through an aligned, central aperture **816** in cap **808** and a dielectric feedthrough **817**. In REGI **800**, an air jet provided by a high-pressure air nozzle **820** impinges on a drive wheel member **822** of the rotor **810** and rotates the rotor **810**. In REGI **800**, the central conductor **814** is oriented along the main axis of the cylindrical stator **804** and parallel to a static uniform magnetic field B_0 and an RF signal is inputted to the central conductor **814** from an RF source **818** via a matching capacitor Cm with a tuning capacitor Ct connected between the junction of matching capacitor Cm and the central conductor **814** and the cap **808**. RF signal applied to the central conductor **814** produces a magnetic field B_1 perpendicular to the central axis of the cylindrical stator. The produced magnetic field B_1 is perpendicular to the static uniform magnetic field B_0 and the predefined magic angle is not used. Throughout the analysis, the air jet rotates the rotor **810** together with the sample **812**.

Referring now to FIG. **9**, there is shown a third embodiment of a Rotational Exchange Gradient Imager (REGI) of the preferred embodiment generally designated by the reference character **900**. In REGI **900**, a mechanical drive assembly generally designated by **920** drives the rotor. REGI **900** includes a toroid cavity generally designated by **902**. Toroid cavity **902** is defined by a stator **904** in the form of a hollow metallic cylinder including a top **906** at a closed end and receiving a base member **908** at an opposite open end. Base member **908** is secured to the cylindrical stator **904** to form the enclosed toroid cavity **902**. A rotor **910** containing a fluid sample **912** is contained within the cylindrical stator **904**. Rotor **910** includes an elongated inner tube **916**. Elongated inner tube **916** extends through an aligned, central aperture **918** in base member **908**. Inner and outer seals **924** and **926** are formed between the inner tube **916** and an outer cylinder **928** that contains sample **912**. Inner and outer seals **925** and **927** are formed between the inner tube **916** and an outer cylinder **928** that contains sample **912**. Rotor **910** is formed of electrically non-conductive material and a bearing stop **929**, such as Teflon coated bearing stop, is provided with the rotor inner tube **916** adjacent the base member **908**. The cylindrical stator **904** defines the toroid cavity resonator with an elongated, electrically conductive rod **914** serving as its central conductor. The central conductor rod **914** is fixedly secured to the stator top **906** and extends along a central, elongated axis of the toroid cavity **902** received through the rotor inner tube **916**. In REGI **900**, the central conductor **914** is oriented along the main axis of the cylindrical stator and parallel to a static uniform magnetic field B_0 oriented along the main axis of the cylindrical stator **904** and an RF signal is inputted to the central conductor **914** from an RF source **919** via a matching capacitor Cm with a tuning capacitor Ct connected between the junction of matching capacitor Cm and the central conductor **914** and the base member **908**. RF signal applied to the central conductor **914** produces a magnetic field B_1 perpendicular to the central axis of the cylindrical stator. The produced magnetic field B_1 is perpendicular to the static uniform magnetic field B_0 and the predefined magic angle is not used.

The mechanical drive assembly **920** includes a drive motor **930** and a drive gear assembly **934** coupled to the inner tube **916** of the rotor **910** for rotation of the rotor **910**. Drive gear assembly **934** may include gears formed of Teflon. The mechanical drive assembly **920** enables changing the rotational direction of the rotor **910**, for example, by reversing current flow in the drive motor **930**, and quickly enables stopping rotation of the rotor **910**. Throughout the analysis, the mechanical drive assembly **920** rotates, stops, starts, and reverses rotational direction of the rotor **910** together with the sample **912**.

While the present invention has been described with reference to the details of the embodiments of the invention shown in the drawings, these details are not intended to limit the scope of the invention as claimed in the appended claims.

What is claimed is:

1. A Rotational Exchange Gradient Imager (REGI) for real-time, in situ investigation of materials subjected to the effects of centrifugal force by nuclear magnetic resonance (NMR) analysis, said REGI comprising: a cylindrical stator defining a toroid cavity, said cylindrical stator formed of an electrically conductive, non-magnetic material, a rotor contained in the cylindrical stator formed of an electrically non-conductive, non-magnetic material, an elongated conductor extending along an elongated central axis of the cylindrical stator, said stator and said central conductor for generating an RF magnetic field for NMR analysis; said RF magnetic field having a radial field gradient with field strength being inversely proportional to radial distance from said central conductor; a sample is contained within the rotor; and a drive for rotating said rotor containing said sample within a stable gas bearing formed between said cylindrical stator and said rotor.

2. A Rotational Exchange Gradient Imager (REGI) as recited in claim **1** wherein said drive for rotating said rotor containing said sample includes a high-pressure carrier gas jet containing one or more reactants; said high-pressure carrier gas jet containing one or more reactants delivered inside of said cylindrical stator and wherein said rotor includes an outside surface and a plurality of vanes formed on said outside surface; said high-pressure carrier gas jet containing one or more reactants impinging on said rotor vanes, whereby said sample contained within said rotor is rotated by said high-pressure carrier gas jet containing one or more reactants.

3. A Rotational Exchange Gradient Imager (REGI) as recited in claim **2** wherein said high-pressure carrier gas jet containing one or more reactants delivered inside of said cylindrical stator includes a closed loop formed of a pump; a first tube coupled between said pump and an entrance opening in said cylindrical stator and a second tube coupled between said pump and an exit opening in said cylindrical stator.

4. A Rotational Exchange Gradient Imager (REGI) as recited in claim **2** wherein said rotor is a cylindrical rotor body; said sample contained inside said cylindrical rotor body; said cylindrical rotor body including a plurality of apertures extending between an outside surface of said cylindrical rotor body to inside said cylindrical rotor body, said apertures allowing said high-pressure carrier gas jet containing one or more reactants to flow to said sample.

5. A Rotational Exchange Gradient Imager (REGI) as recited in claim **4** wherein said central conductor comprising an egress tube; said rotor rotating about said central conductor egress tube without contacting said central conductor egress tube; said central conductor egress tube including a perforated central conductor egress tube.

6. A Rotational Exchange Gradient Imager (REGI) as recited in claim **1** wherein said central conductor and said

cylindrical stator and rotor are held at a predefined magic angle relative to an externally applied static uniform magnetic field B_0.

7. A Rotational Exchange Gradient Imager (REGI) as recited in claim **1** wherein said drive for rotating said rotor containing said sample includes an air jet for driving said rotor.

8. A Rotational Exchange Gradient Imager (REGI) as recited in claim **1** wherein said drive for rotating said rotor containing said sample includes a mechanical drive assembly for driving said rotor.

9. A Rotational Exchange Gradient Imager (REGI) as recited in claim **8** wherein said mechanical drive assembly includes a drive motor and a drive gear coupled to said rotor.

10. A Rotational Exchange Gradient Imager (REGI) as recited in claim **1** wherein said cylindrical stator is formed of an electrically conductive, non-magnetic metallic material having predefined mechanical strength for containing high pressure within said cylindrical stator.

11. A Rotational Exchange Gradient Imager (REGI) as recited in claim **1** wherein said cylindrical stator is formed of a selected material, said selected material including copper, beryllium copper, aluminum, phosphor bronze and titanium.

12. A Rotational Exchange Gradient Imager (REGI) as recited in claim **1** wherein said cylindrical stator includes a cylindrical stator body having an open end and a member mounted on said open end.

13. A Rotational Exchange Gradient Imager (REGI) as recited in claim **1** wherein said rotor is formed of an electrically non-conductive, non-magnetic material.

14. A Rotational Exchange Gradient Imager (REGI) as recited in claim **1** wherein said rotor rotating about said central conductor without contacting said central conductor.

15. A nuclear magnetic resonance (NMR) analysis method for real-time, in situ investigation of materials subjected to the effects of centrifugal force comprising the steps of:

providing a cylindrical stator defining a toroid cavity, said cylindrical stator formed of an electrically conductive, non-magnetic material, a rotor contained in the cylindrical stator formed of an electrically non-conductive, non-magnetic material, and an elongated conductor extending along an elongated central axis of said cylindrical stator;

generating an RF magnetic field for NMR analysis with said stator and said central conductor; said RF magnetic field having a radial field gradient with field strength being inversely proportional to radial distance from said central conductor;

containing a sample within said rotor; and

rotating said rotor containing said sample within a stable gas bearing formed between said cylindrical stator and said rotor.

16. A nuclear magnetic resonance (NMR) analysis method as recited in claim **15** wherein said step of rotating said rotor containing said sample within a stable gas bearing formed between said cylindrical stator and said rotor includes the steps of providing a mechanical drive assembly coupled to said rotor and wherein said rotor includes a elongated tube extending along said central axis of said cylindrical stator and extending outside said cylindrical stator for rotation by said mechanical drive assembly.

17. A nuclear magnetic resonance (NMR) analysis method as recited in claim **15** wherein said step of rotating said rotor containing said sample within a stable gas bearing formed between said cylindrical stator and said rotor includes the steps of delivering an air jet inside of said cylindrical stator and wherein said rotor includes a drive wheel member; said air jet impinging on said drive wheel member for rotating said rotor containing said sample.

18. A nuclear magnetic resonance (NMR) analysis method as recited in claim **15** includes the step of providing said central conductor and said cylindrical stator and rotor at a predefined magic angle relative to an externally applied static uniform magnetic field B_0; and wherein said step of rotating said rotor containing said sample within a stable gas bearing formed between said cylindrical stator and said rotor includes the steps of delivering a high-pressure carrier gas jet containing one or more reactants inside of said cylindrical stator and wherein said rotor includes an outside surface and a plurality of vanes formed on said outside surface; said high-pressure carrier gas jet containing one or more reactants impinging on said rotor vanes for rotating said rotor containing said sample.

19. A nuclear magnetic resonance (NMR) analysis method as recited in claim **18** includes the step of providing an egress tube for said central conductor; and wherein said rotor is a cylindrical rotor body; said sample contained inside said cylindrical rotor body; said cylindrical rotor body including a plurality of apertures extending between an outside surface of said cylindrical rotor body to inside said cylindrical rotor body, said apertures allowing said high-pressure carrier gas jet containing one or more reactants to flow through said sample; and said central conductor egress tube having holes receiving reaction products from said sample.

20. A nuclear magnetic resonance (NMR) analysis method as recited in claim **19** includes the step of providing a valve and regulator coupled to central conductor egress tube for maintaining a selected pressure in said central conductor egress tube and drawing off reaction products for analysis.

* * * * *