US007019713B2

(12) **United States Patent**
Hereld et al.

(10) **Patent No.: US 7,019,713 B2**
(45) **Date of Patent: Mar. 28, 2006**

(54) **METHODS AND MEASUREMENT ENGINE FOR ALIGNING MULTI-PROJECTOR DISPLAY SYSTEMS**

(75) Inventors: **Mark Hereld**, Chicago, IL (US); **Ivan R. Judson**, Chicago, IL (US); **Rick L. Stevens**, Naperville, IL (US)

(73) Assignee: **The University of Chicago**, Chicago, IL (US)

(*) Notice: Subject to any disclaimer, the term of this patent is extended or adjusted under 35 U.S.C. 154(b) by 412 days.

(21) Appl. No.: **10/283,719**

(22) Filed: **Oct. 30, 2002**

(65) **Prior Publication Data**

US 2004/0085256 A1 May 6, 2004

(51) **Int. Cl.**
G09G 5/00 (2006.01)

(52) **U.S. Cl.** **345/1.1**; 345/1.3; 345/4

(58) **Field of Classification Search** 345/1.1, 345/32, 581, 1, 204, 1.3, 19, 20, 4, 589, 613; 348/383, 189, 744–747, 36; 600/160; 353/121, 353/30, 20; 343/720; 399/27
See application file for complete search history.

(56) **References Cited**

U.S. PATENT DOCUMENTS

5,926,145 A * 7/1999 Honma 343/720
6,219,099 B1 * 4/2001 Johnson et al. 348/383
6,310,650 B1 10/2001 Johnson et al.
6,377,306 B1 * 4/2002 Johnson et al. 348/383
6,503,195 B1 * 1/2003 Keller et al. 600/160
6,834,965 B1 * 12/2004 Raskar et al. 353/94
6,863,400 B1 * 3/2005 Liang 353/20
2002/0070944 A1 * 6/2002 Deering 345/581
2003/0052837 A1 * 3/2003 Raskar 345/32
2003/0067587 A1 * 4/2003 Yamasaki et al. 353/30
2003/0085906 A1 * 5/2003 Elliott et al. 345/613
2003/0103058 A1 * 6/2003 Elliott et al. 345/589
2003/0206179 A1 * 11/2003 Deering 345/589
2004/0085477 A1 * 5/2004 Majumder et al. 348/383
2004/0156645 A1 * 8/2004 Nakazato 399/27
2004/0184013 A1 * 9/2004 Raskar et al. 353/121

* cited by examiner

Primary Examiner—Vijay Shankar
Assistant Examiner—Prabodh Dharia
(74) *Attorney, Agent, or Firm*—Joan Pennington

(57) **ABSTRACT**

An image pattern description is stored and tiled display test pattern images are captured. The stored image pattern description and at least one captured tiled display test pattern image are used to identify a tile array placement and layout; a tile registration measurement; and a dot grid measurement providing measured dot grid positions. At least one captured tiled display test pattern images and the measured dot grid positions are used for calculating tile-to-camera maps and a camera-to-mural map. The tile-to-camera maps and the camera-to-mural map are used to generate control and correction data.

20 Claims, 14 Drawing Sheets

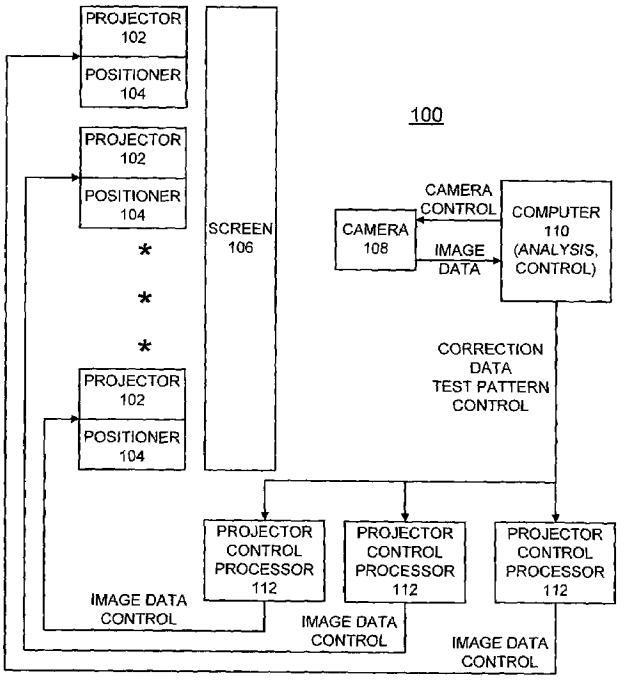

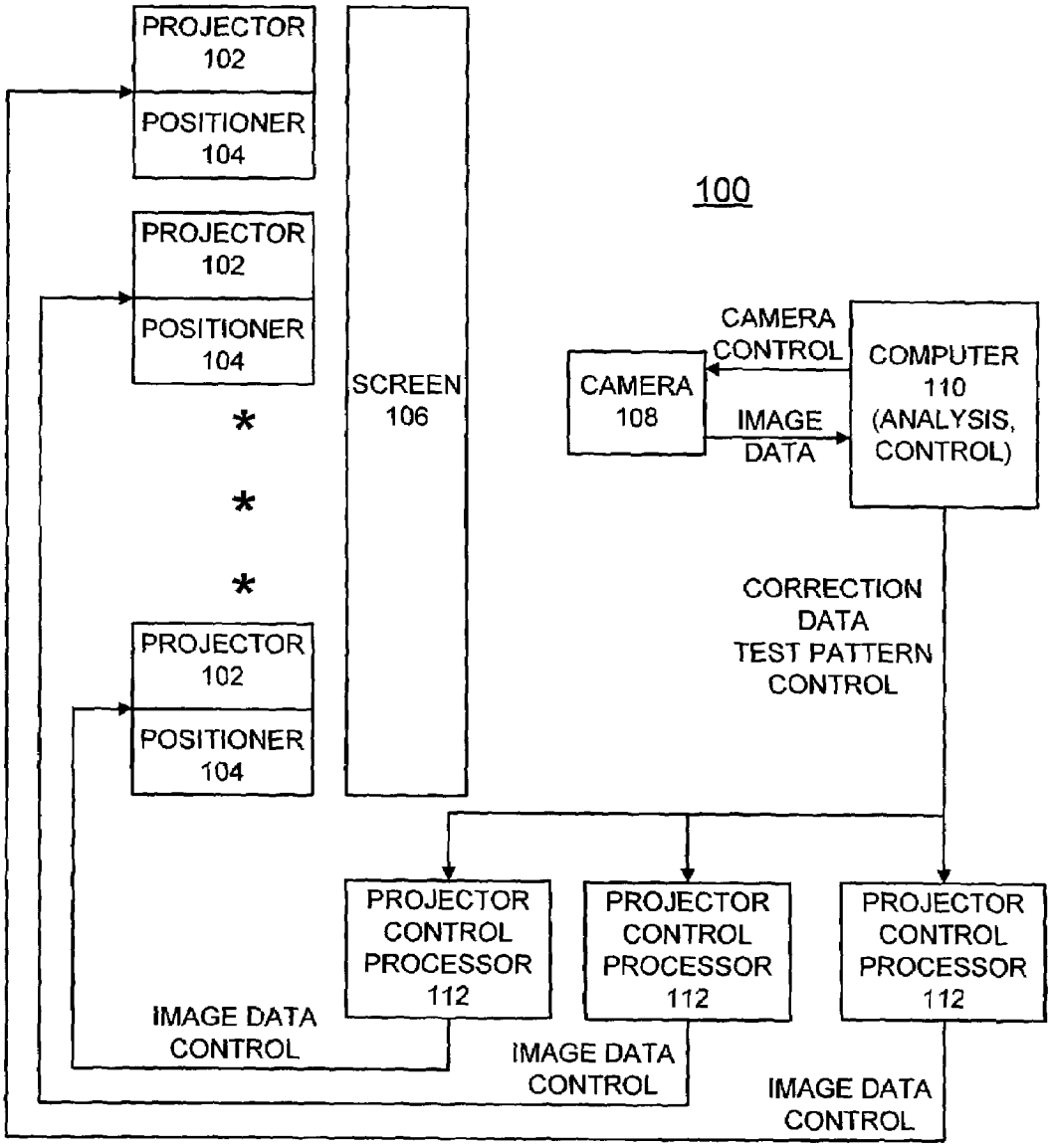
PROJECTOR 102
POSITIONER 104
PROJECTOR 102
POSITIONER 104
*
*
*
PROJECTOR 102
POSITIONER 104
SCREEN 106
100
CAMERA CONTROL
CAMERA 108
IMAGE DATA
COMPUTER 110 (ANALYSIS, CONTROL)
CORRECTION DATA
TEST PATTERN CONTROL
PROJECTOR CONTROL PROCESSOR 112
PROJECTOR CONTROL PROCESSOR 112
PROJECTOR CONTROL PROCESSOR 112
IMAGE DATA CONTROL
IMAGE DATA CONTROL
IMAGE DATA CONTROL

FIG. 1

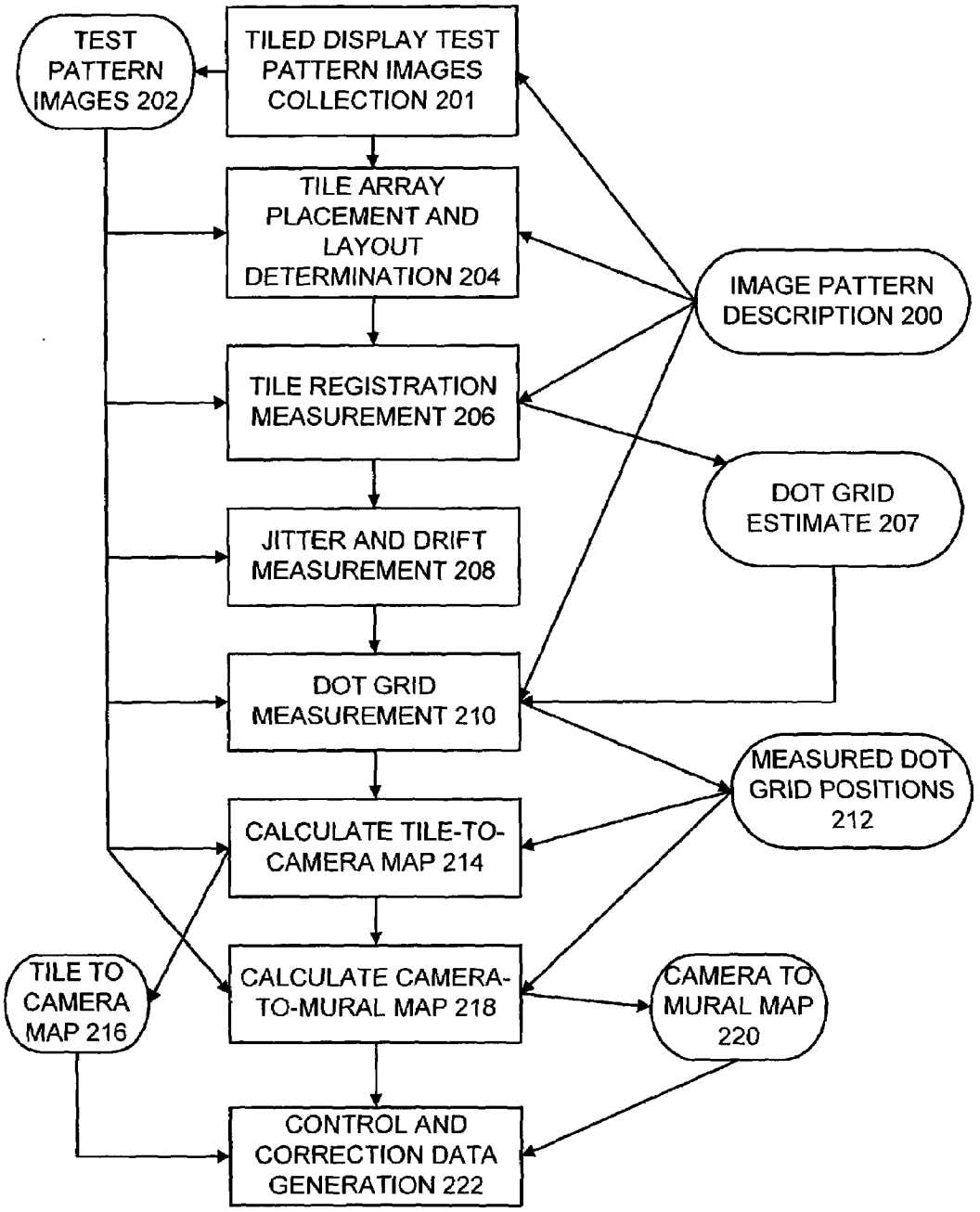
TEST PATTERN IMAGES 202
TILED DISPLAY TEST PATTERN IMAGES COLLECTION 201
TILE ARRAY PLACEMENT AND LAYOUT DETERMINATION 204
IMAGE PATTERN DESCRIPTION 200
TILE REGISTRATION MEASUREMENT 206
DOT GRID ESTIMATE 207
JITTER AND DRIFT MEASUREMENT 208
DOT GRID MEASUREMENT 210
MEASURED DOT GRID POSITIONS 212
CALCULATE TILE-TO-CAMERA MAP 214
TILE TO CAMERA MAP 216
CALCULATE CAMERA-TO-MURAL MAP 218
CAMERA TO MURAL MAP 220
CONTROL AND CORRECTION DATA GENERATION 222

FIG. 2

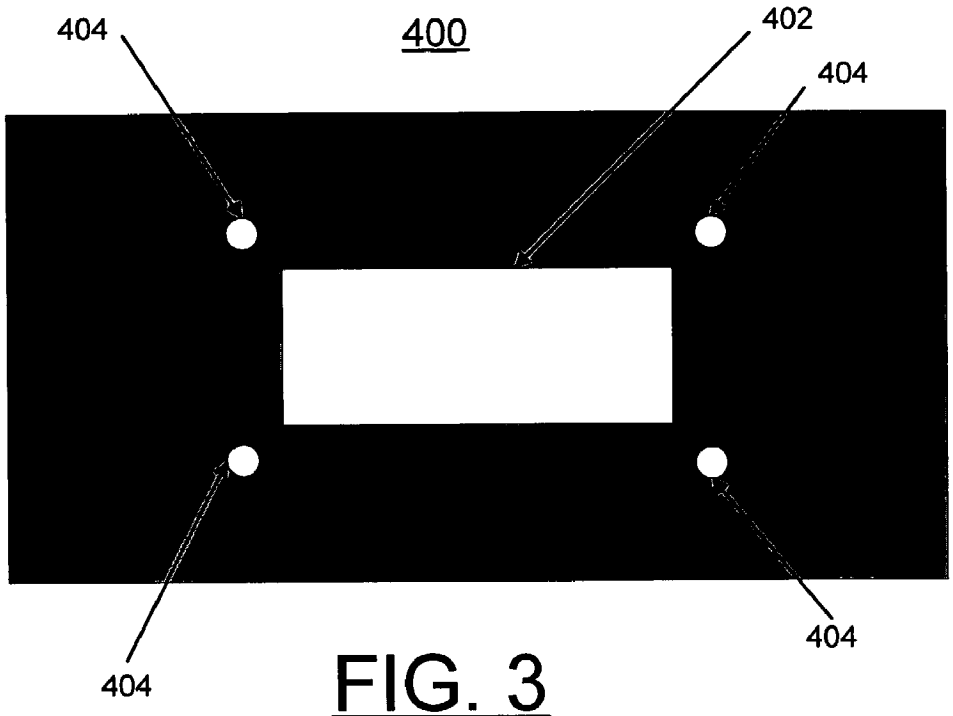

FIG. 3

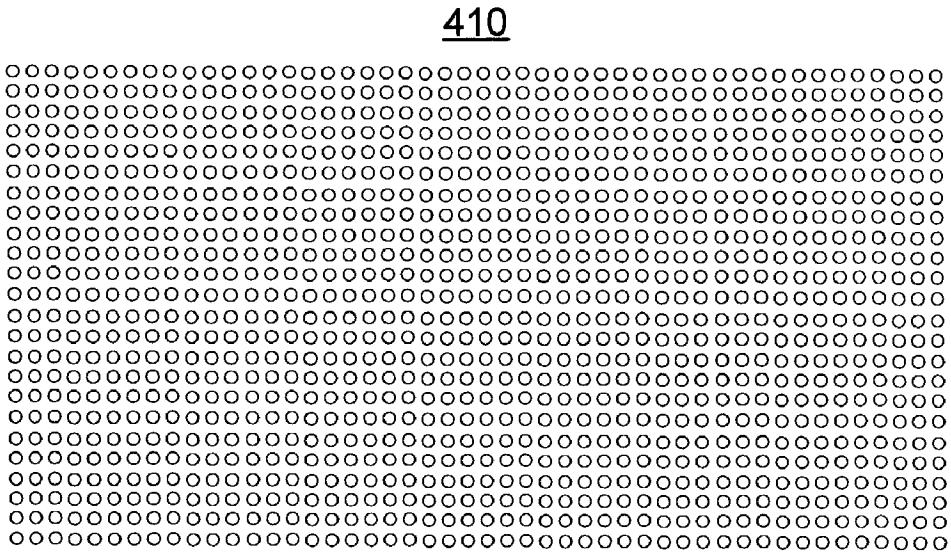

FIG. 4

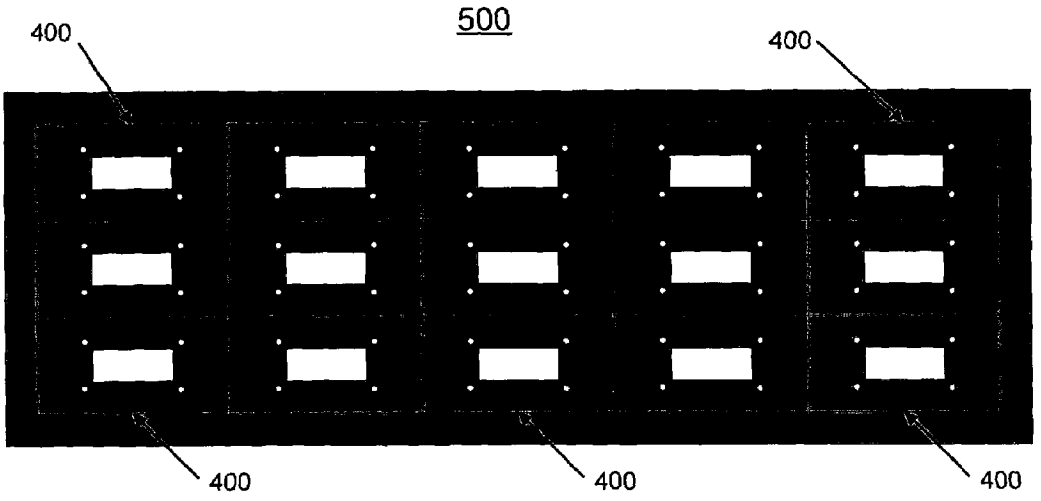

FIG. 5

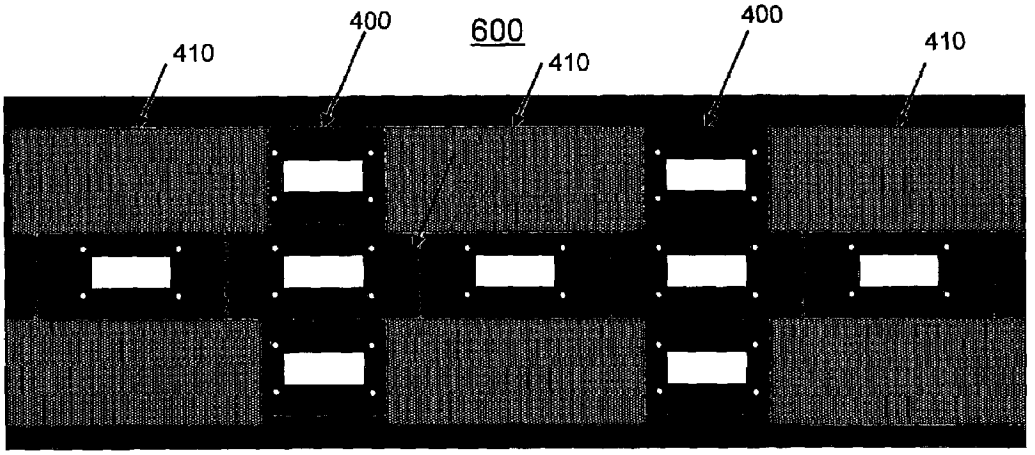

FIG. 6A

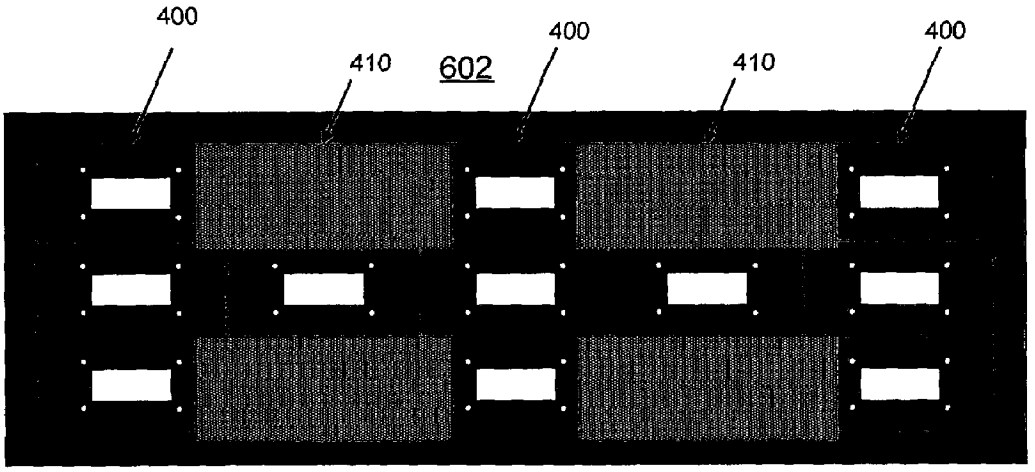

FIG. 6B

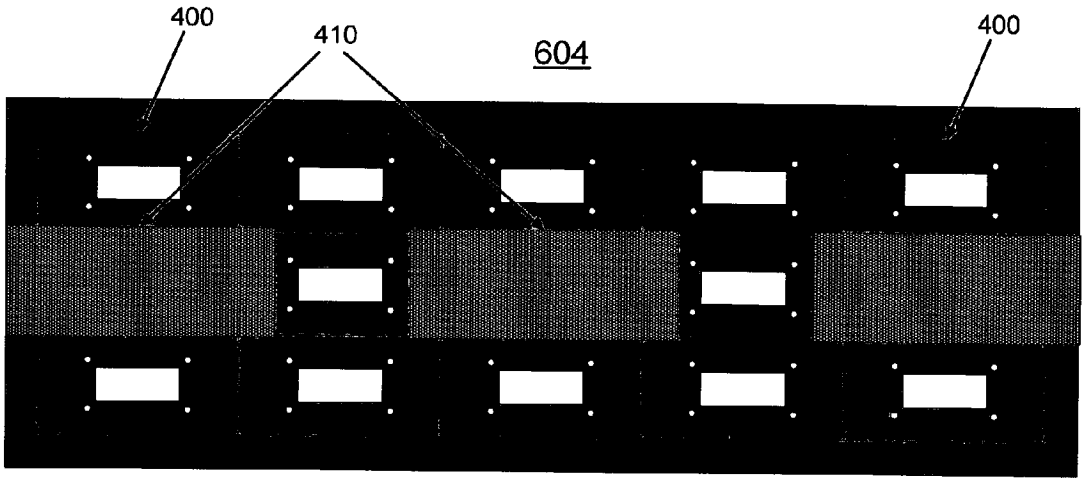

FIG. 6C

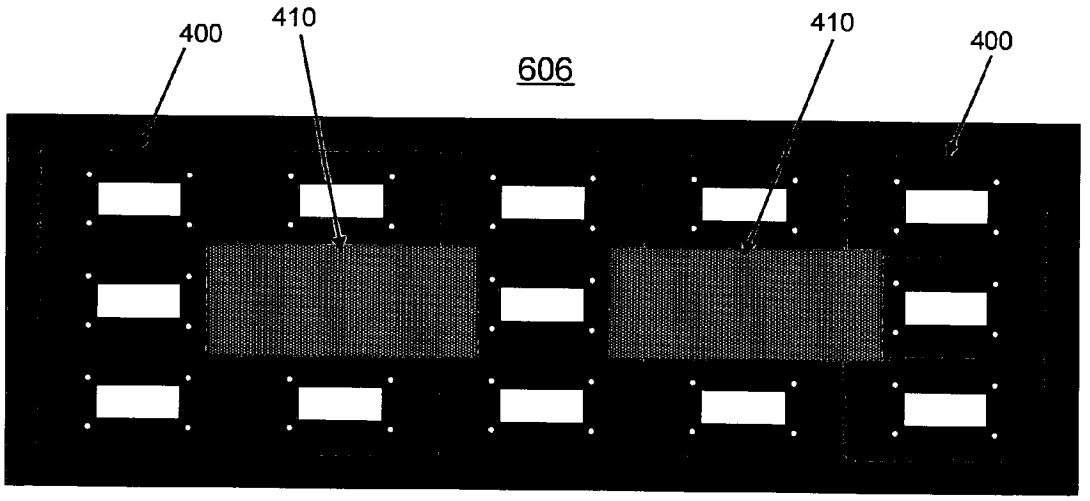

FIG. 6D

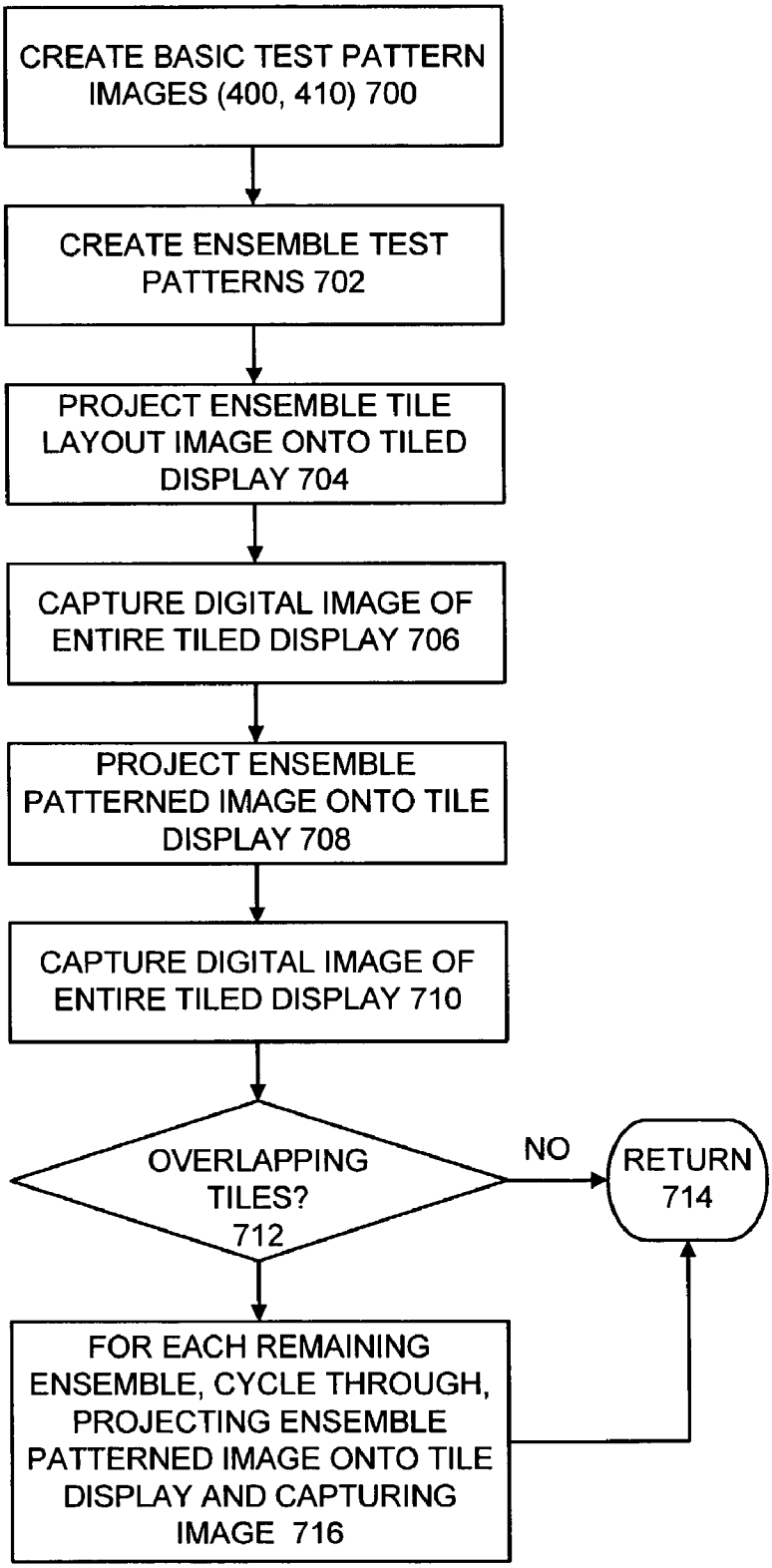
CREATE BASIC TEST PATTERN IMAGES (400, 410) 700
CREATE ENSEMBLE TEST PATTERNS 702
PROJECT ENSEMBLE TILE LAYOUT IMAGE ONTO TILED DISPLAY 704
CAPTURE DIGITAL IMAGE OF ENTIRE TILED DISPLAY 706
PROJECT ENSEMBLE PATTERNED IMAGE ONTO TILE DISPLAY 708
CAPTURE DIGITAL IMAGE OF ENTIRE TILED DISPLAY 710
OVERLAPPING TILES? 712
NO
RETURN 714
FOR EACH REMAINING ENSEMBLE, CYCLE THROUGH, PROJECTING ENSEMBLE PATTERNED IMAGE ONTO TILE DISPLAY AND CAPTURING IMAGE 716

FIG. 7

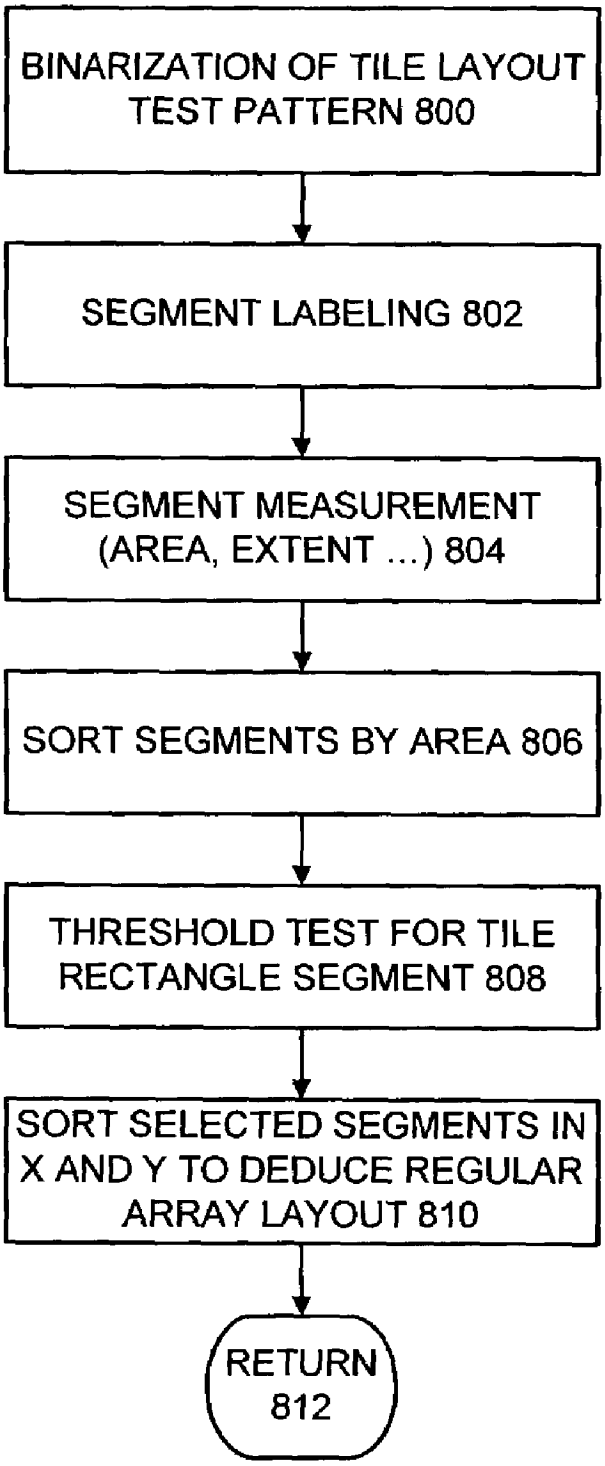
BINARIZATION OF TILE LAYOUT TEST PATTERN 800
SEGMENT LABELING 802
SEGMENT MEASUREMENT (AREA, EXTENT ...) 804
SORT SEGMENTS BY AREA 806
THRESHOLD TEST FOR TILE RECTANGLE SEGMENT 808
SORT SELECTED SEGMENTS IN X AND Y TO DEDUCE REGULAR ARRAY LAYOUT 810
RETURN 812

FIG. 8

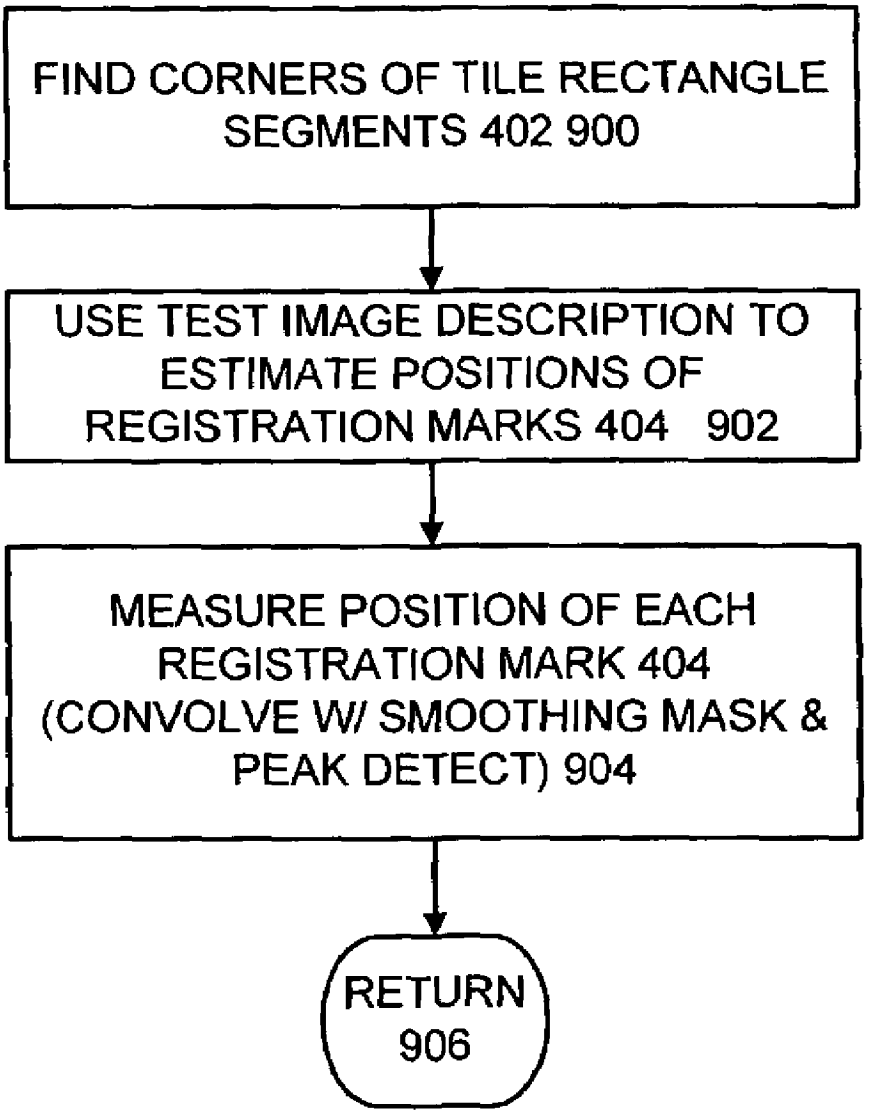
FIND CORNERS OF TILE RECTANGLE SEGMENTS 402 900
USE TEST IMAGE DESCRIPTION TO ESTIMATE POSITIONS OF REGISTRATION MARKS 404 902
MEASURE POSITION OF EACH REGISTRATION MARK 404 (CONVOLVE W/ SMOOTHING MASK & PEAK DETECT) 904
RETURN 906

FIG. 9

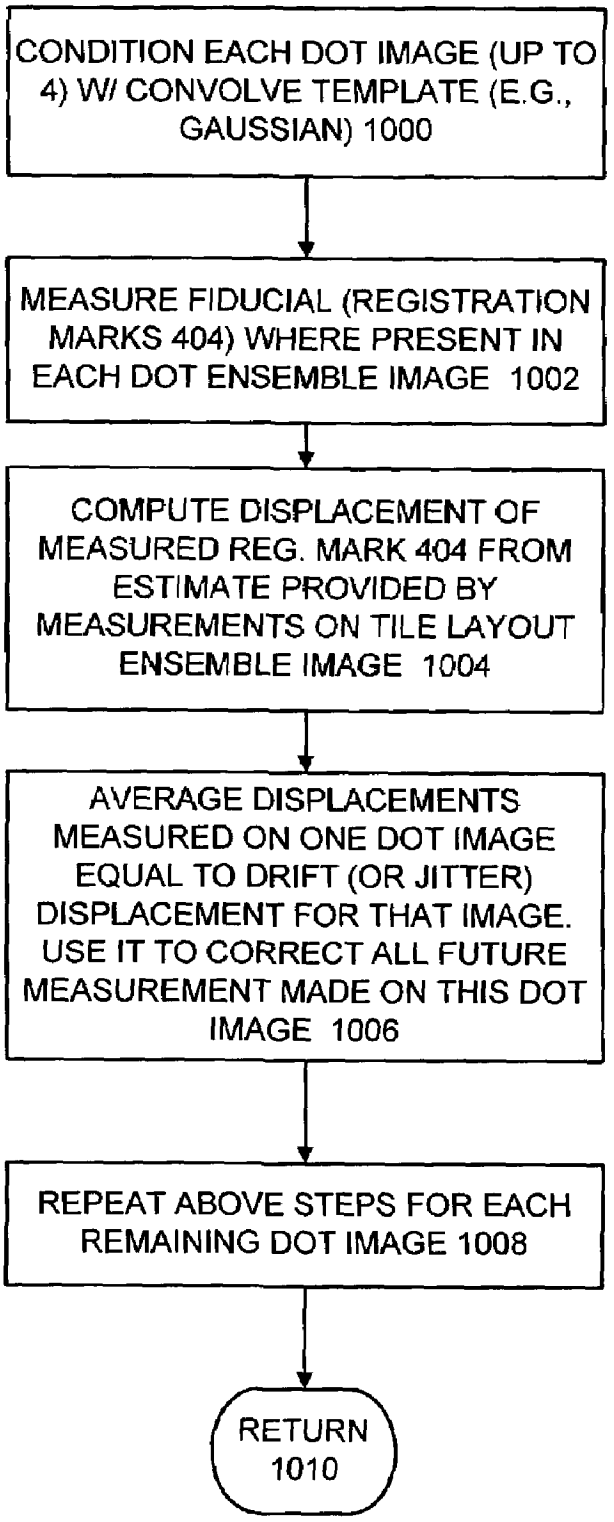
CONDITION EACH DOT IMAGE (UP TO 4) W/ CONVOLVE TEMPLATE (E.G., GAUSSIAN) 1000
MEASURE FIDUCIAL (REGISTRATION MARKS 404) WHERE PRESENT IN EACH DOT ENSEMBLE IMAGE 1002
COMPUTE DISPLACEMENT OF MEASURED REG. MARK 404 FROM ESTIMATE PROVIDED BY MEASUREMENTS ON TILE LAYOUT ENSEMBLE IMAGE 1004
AVERAGE DISPLACEMENTS MEASURED ON ONE DOT IMAGE EQUAL TO DRIFT (OR JITTER) DISPLACEMENT FOR THAT IMAGE. USE IT TO CORRECT ALL FUTURE MEASUREMENT MADE ON THIS DOT IMAGE 1006
REPEAT ABOVE STEPS FOR EACH REMAINING DOT IMAGE 1008
RETURN 1010

FIG. 10

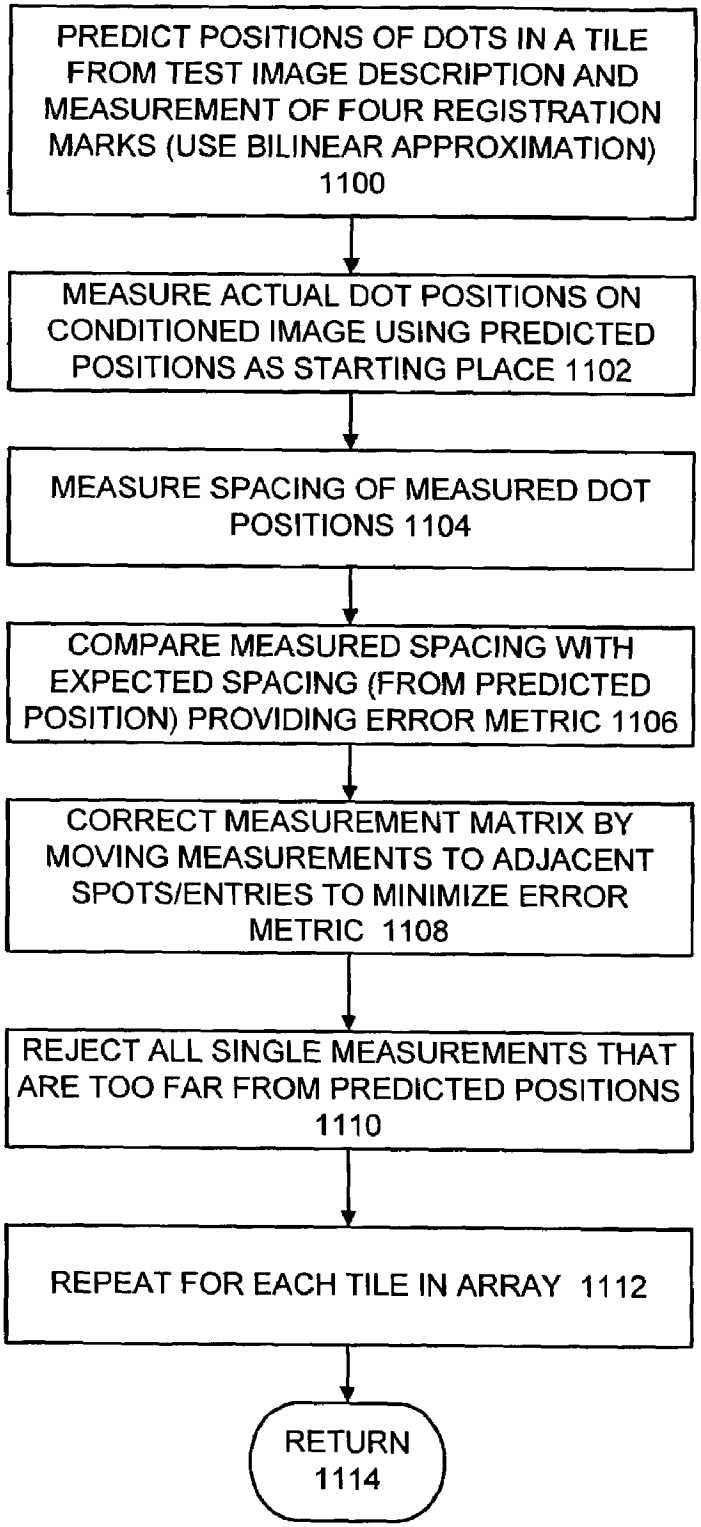
PREDICT POSITIONS OF DOTS IN A TILE FROM TEST IMAGE DESCRIPTION AND MEASUREMENT OF FOUR REGISTRATION MARKS (USE BILINEAR APPROXIMATION) 1100
MEASURE ACTUAL DOT POSITIONS ON CONDITIONED IMAGE USING PREDICTED POSITIONS AS STARTING PLACE 1102
MEASURE SPACING OF MEASURED DOT POSITIONS 1104
COMPARE MEASURED SPACING WITH EXPECTED SPACING (FROM PREDICTED POSITION) PROVIDING ERROR METRIC 1106
CORRECT MEASUREMENT MATRIX BY MOVING MEASUREMENTS TO ADJACENT SPOTS/ENTRIES TO MINIMIZE ERROR METRIC 1108
REJECT ALL SINGLE MEASUREMENTS THAT ARE TOO FAR FROM PREDICTED POSITIONS 1110
REPEAT FOR EACH TILE IN ARRAY 1112
RETURN 1114

FIG. 11

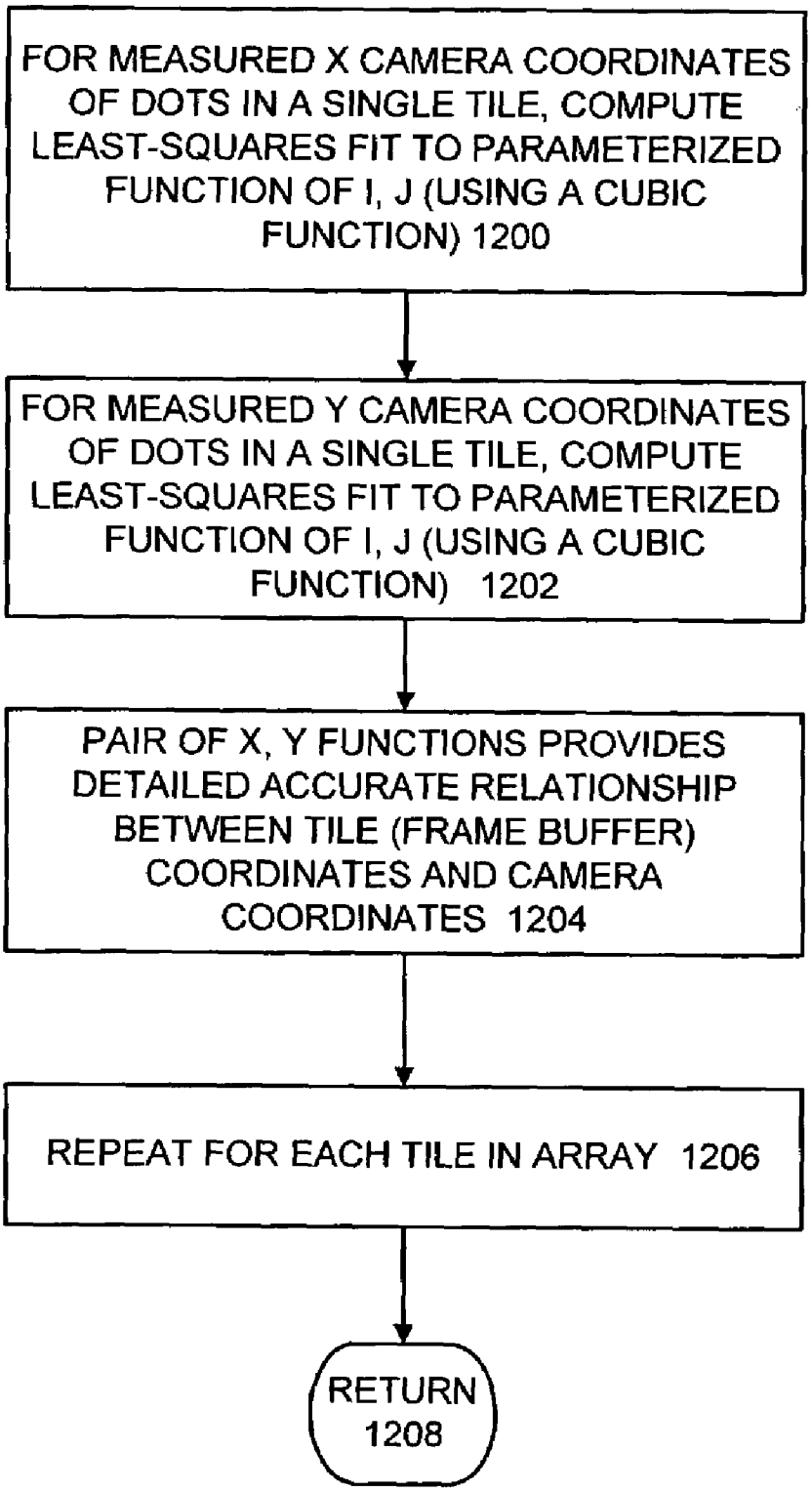
FOR MEASURED X CAMERA COORDINATES OF DOTS IN A SINGLE TILE, COMPUTE LEAST-SQUARES FIT TO PARAMETERIZED FUNCTION OF I, J (USING A CUBIC FUNCTION) 1200
FOR MEASURED Y CAMERA COORDINATES OF DOTS IN A SINGLE TILE, COMPUTE LEAST-SQUARES FIT TO PARAMETERIZED FUNCTION OF I, J (USING A CUBIC FUNCTION) 1202
PAIR OF X, Y FUNCTIONS PROVIDES DETAILED ACCURATE RELATIONSHIP BETWEEN TILE (FRAME BUFFER) COORDINATES AND CAMERA COORDINATES 1204
REPEAT FOR EACH TILE IN ARRAY 1206
RETURN 1208

FIG. 12

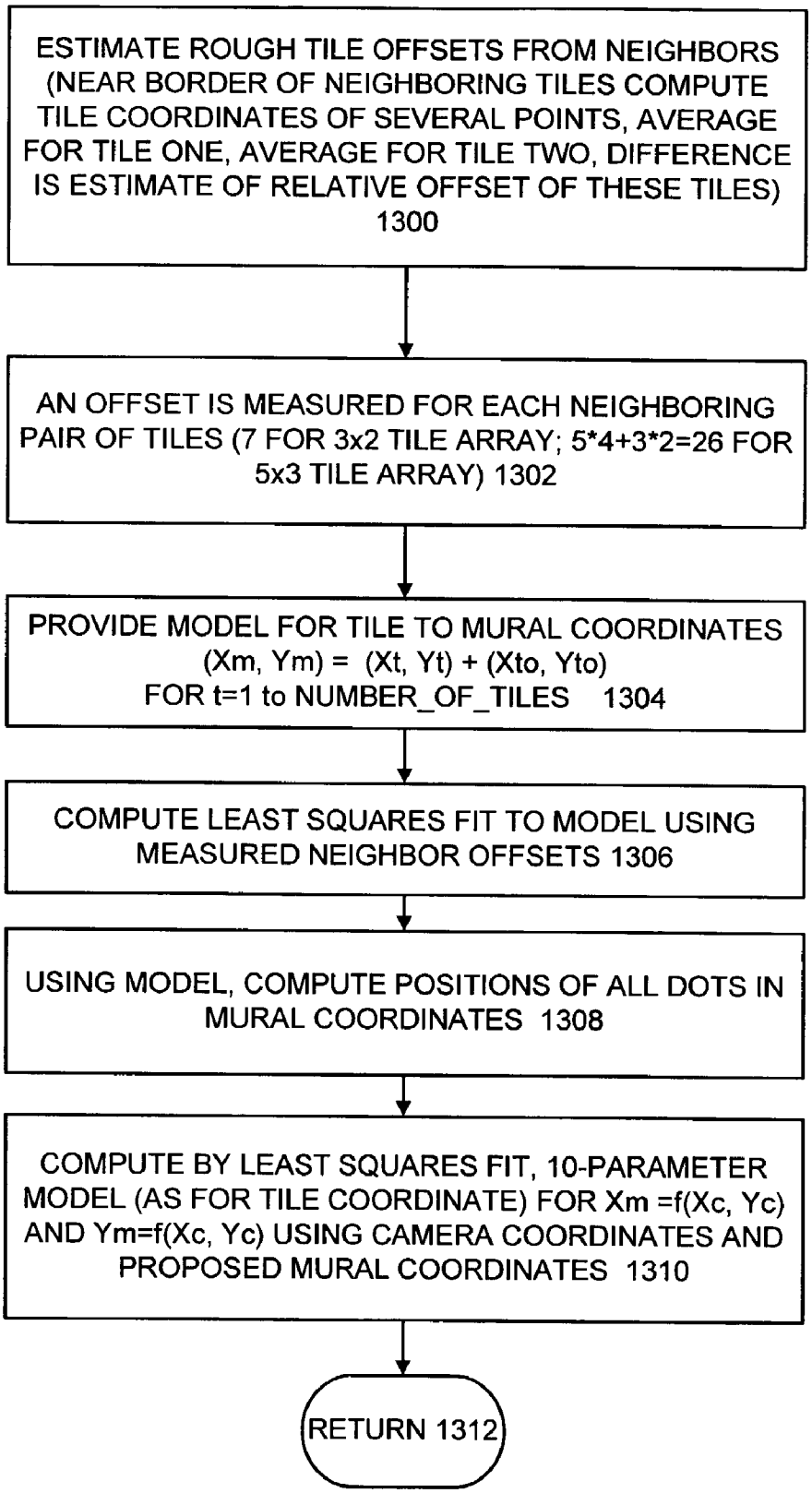
ESTIMATE ROUGH TILE OFFSETS FROM NEIGHBORS (NEAR BORDER OF NEIGHBORING TILES COMPUTE TILE COORDINATES OF SEVERAL POINTS, AVERAGE FOR TILE ONE, AVERAGE FOR TILE TWO, DIFFERENCE IS ESTIMATE OF RELATIVE OFFSET OF THESE TILES) 1300
AN OFFSET IS MEASURED FOR EACH NEIGHBORING PAIR OF TILES (7 FOR 3x2 TILE ARRAY; 5*4+3*2=26 FOR 5x3 TILE ARRAY) 1302
PROVIDE MODEL FOR TILE TO MURAL COORDINATES (Xm, Ym) = (Xt, Yt) + (Xto, Yto) FOR t=1 to NUMBER_OF_TILES 1304
COMPUTE LEAST SQUARES FIT TO MODEL USING MEASURED NEIGHBOR OFFSETS 1306
USING MODEL, COMPUTE POSITIONS OF ALL DOTS IN MURAL COORDINATES 1308
COMPUTE BY LEAST SQUARES FIT, 10-PARAMETER MODEL (AS FOR TILE COORDINATE) FOR Xm =f(Xc, Yc) AND Ym=f(Xc, Yc) USING CAMERA COORDINATES AND PROPOSED MURAL COORDINATES 1310
RETURN 1312

FIG. 13

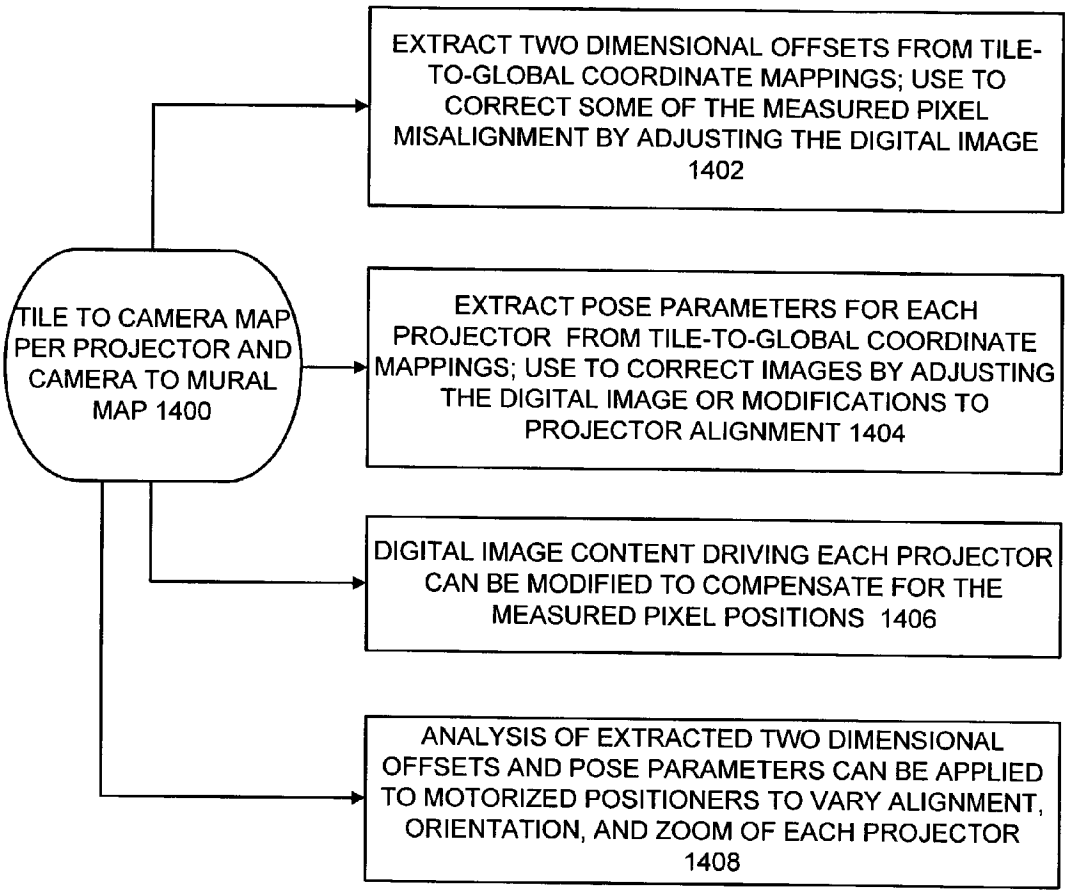
TILE TO CAMERA MAP PER PROJECTOR AND CAMERA TO MURAL MAP 1400
EXTRACT TWO DIMENSIONAL OFFSETS FROM TILE-TO-GLOBAL COORDINATE MAPPINGS; USE TO CORRECT SOME OF THE MEASURED PIXEL MISALIGNMENT BY ADJUSTING THE DIGITAL IMAGE 1402
EXTRACT POSE PARAMETERS FOR EACH PROJECTOR FROM TILE-TO-GLOBAL COORDINATE MAPPINGS; USE TO CORRECT IMAGES BY ADJUSTING THE DIGITAL IMAGE OR MODIFICATIONS TO PROJECTOR ALIGNMENT 1404
DIGITAL IMAGE CONTENT DRIVING EACH PROJECTOR CAN BE MODIFIED TO COMPENSATE FOR THE MEASURED PIXEL POSITIONS 1406
ANALYSIS OF EXTRACTED TWO DIMENSIONAL OFFSETS AND POSE PARAMETERS CAN BE APPLIED TO MOTORIZED POSITIONERS TO VARY ALIGNMENT, ORIENTATION, AND ZOOM OF EACH PROJECTOR 1408

FIG. 14

METHODS AND MEASUREMENT ENGINE FOR ALIGNING MULTI-PROJECTOR DISPLAY SYSTEMS

CONTRACTUAL ORIGIN OF THE INVENTION

The United States Government has rights in this invention pursuant to Contract No. W-31-109-ENG-38 between the United States Government and Argonne National Laboratory.

RELATED APPLICATION

A related U.S. patent application Ser. No. 10/283,991, entitled "METHOD TO SMOOTH PHOTOMETRIC VARIATIONS ACROSS MULTI-PROJECTOR DISPLAYS" by Aditi Majumder and Rick Stevens and assigned to the present assignee, is being filed on the same day as the present patent application.

FIELD OF THE INVENTION

The present invention relates to methods and a measurement engine for aligning multi-projector display systems.

DESCRIPTION OF THE RELATED ART

Tiled projection display systems use multiple projectors to produce a large, high resolution image. In many known systems, multiple screens are placed next to each other to form a large image display. A problem with many of the multi-projector display systems is that the multiple images often do not appear as one single continuous image on the display screen. When multiple images are projected on a single screen, typically the composite image includes alignment errors and optical distortions. In the composite image, often there are seams or bright lines between the multiple images.

A need exists for improved methods and a measurement engine for aligning multi-projector display systems. The properties of projectors and aggregates of projectors that can contribute to geometrical mismatch in the image plane are imperfect projector optics and misalignment in six degrees-of-freedom of each projector with respect to the display surface.

A common approach to the problem of achieving a unified and uniform geometrical basis for image presentation on tiled displays is to carefully align the projectors in the tiled array. Indeed, this is very often the starting place even when additional methods are employed. This involves adjusting the position, orientation, and zoom for each projector in an attempt to obtain the desired pixel-to-pixel relationships. Assuming that projector optics do not introduce any distortion, it is time consuming and extremely difficult to align pixels in each tile so that they are aligned with the nearest pixels of neighboring projected tiles, and introduce no tile-to-tile gap.

U.S. Pat. No. 6,310,650 issued Oct. 30, 2001 discloses a method for calibrating a tiled display system. One or more cameras are provided to capture an image of the display screen. The resulting captured image is processed to identify any non-desirable characteristics, including visible artifacts such as, seams, bands, and rings. Then an appropriate transformation function is determined. The transformation function is used to pre-warp the input video signal that is provided to the display such that the non-desirable characteristics are reduced or eliminated from the display. The transformation function preferably compensates for spatial non-uniformity, color non-uniformity, luminance non-uniformity, and other visible artifacts.

U.S. Pat. No. 6,377,306 issued Apr. 23, 2002 discloses a display for producing a seamless composite image from at least two discrete images. The display includes one or more projectors for projecting each of the discrete images separately onto a screen such that at least one of the discrete images overlaps at least one other of the discrete images by more than 25 percent. The amount of overlap that is required to reduce the seams of the composite image to an acceptable level over a predetermined viewing angle depends on a number of factors including the field-of-view and aperture size of the projectors, and the screen gain profile. For rear-projection screens and some front projection screens, an overlap of more than 25 percent is acceptable.

A principal object of the present invention is to provide methods and a measurement engine for aligning multi-projector display systems.

It is another object of the present invention to provide such methods and measurement engine to produce geometrical seam continuity across the transitions from one projector to a neighbor projector in the composite image.

It is another object of the present invention to provide such methods and measurement engine for aligning multi-projector display systems to correct the effects of the geometrical relationships between pixels in all of the individual projected sub-images to produce a geometrically uniform and continuous composite image.

Other important objects of the present invention are to provide methods and measurement engine for aligning multi-projector display systems substantially without negative effect; and that overcome some disadvantages of prior art arrangements.

SUMMARY OF THE INVENTION

In brief, methods and a measurement engine are provided for aligning multi-projector display systems. An image pattern description is stored and tiled display test pattern images are captured. The stored image pattern description and at least one captured tiled display test pattern image are used to identify a tile array placement and layout; a tile registration measurement; and a dot grid measurement providing measured dot grid positions. At least one captured tiled display test pattern images and the measured dot grid positions are used for calculating tile-to-camera maps and a camera-to-mural map. The tile-to-camera maps and the camera-to-mural map are used to generate control and correction data.

BRIEF DESCRIPTION OF THE DRAWINGS

The present invention together with the above and other objects and advantages may best be understood from the following detailed description of the preferred embodiments of the invention illustrated in the drawings, wherein:

FIG. **1** is a block diagram representation illustrating a multi-projector display system for implementing the novel methods for aligning multi-projector display systems in accordance with the preferred embodiment;

FIG. **2** is a flow chart illustrating exemplary steps of the methods for aligning multi-projector display systems in accordance with the preferred embodiment;

FIGS. **3** and **4** are diagrams illustrating exemplary first and second test pattern images used in the methods for aligning multi-projector display systems in accordance with the preferred embodiment;

FIG. **5** is a diagram illustrating an exemplary first ensemble test pattern image used in the methods for aligning multi-projector display systems in accordance with the preferred embodiment;

FIGS. **6**A, **6**B, **6**C, and **6**D are diagrams illustrating exemplary ensembles including both first and second test pattern images of FIGS. **3** and **4** used in the methods for aligning multi-projector display systems in accordance with the preferred embodiment; and

FIGS. **7**, **8**, **9**, **10**, **11**, **12**, **13**, and **14** illustrate exemplary method steps for aligning multi-projector display systems in accordance with the preferred embodiment.

DETAILED DESCRIPTION OF THE PREFERRED EMBODIMENTS

Having reference now to the drawings, in FIG. **1** there is shown a multi-projector display system generally designated by the reference character **100** for implementing the novel methods for aligning multi-projector display systems in accordance with the preferred embodiment. Multi-projector display system **100** includes a plurality of projectors **102**, each having an associated positioner **104**, for projecting large area, high resolution tiled displays onto a display screen **106**. Multi-projector display system **100** includes an array of multiple projectors **102**, for example, a 3×5 array of 15 projectors **102**. Multi-projector display system **100** includes a camera **108** for capturing tiled display images and applying image data to a computer **110** for analysis and implementing methods for aligning multi-projector display systems in accordance with the preferred embodiment. Computer **110** optionally operatively controls camera **108** as indicated at a line labeled camera control. Computer **110** applies correction data, test pattern and control to each of a plurality of projector control processors **112**. Projector control processors **112** apply image data and control signals to the projectors **102** and associated positioners **104**.

It should be understood that the present invention is not limited to the illustrated multi-projector display system **100**. For example, a single server computer could be used instead of the plurality of projector control processors **112**. Rather than using separate projector control processors **112**, the respective projectors **102** could be provided with an integral control processor.

Various commercially available digital cameras can be used for camera **108**, for example, a Nikon Coolpix 950 (1600×1200) or a Fujifilm MX-2900 Zoom (1800×1200). Using an un-calibrated camera **108** allows the use of relatively inexpensive digital cameras with little regard to setup. For example, a camera zoom function for the camera can be used casually to frame the display without needing to measure the relationship between ray angles and camera pixel position. Except for arranging that the captured image is unsaturated, there is little else that needs to be considered.

Various commercially available computers can be used for computer **110**, for example, a personal computer or laptop computer. Computer **110** is suitably programmed to execute the flowcharts of FIGS. **2**, **3**, **7**, **8**, **9**, **10**, **11**, **12**, and **13** for implementing the novel methods for aligning multi-projector display systems in accordance with the preferred embodiment.

In accordance with features of the invention, a method is provided for measuring the positions of projected pixels on the display surface **106** by the array of projectors **102** whose images may overlap. The measuring method accurately detects alignment errors and optical distortions in each projector **102**. The measurements are then used to correct the effects of the geometrical relationships between pixels in all of the individual projected sub-images to produce a geometrically uniform and continuous composite image.

In accordance with features of the invention, the method is implemented as a series of processing steps each of which can be modified or replaced, for example, as superior techniques become available. The method of the invention is implemented using Matlab. The analysis requires few exposures, for example, at most 5 snapshots of the tiled array with arrangements of two test patterns on the individual tiles. The test features of the two test patterns are described to the program to allow for a range of different patterns optimized for different situations. The output of the analysis is a parameterized mapping from each tile coordinate system (frame buffer pixel coordinates) to a unified coordinate system for the entire mural display.

Referring now to FIG. **2**, there are shown exemplary steps of the methods for aligning multi-projector display system **100** in accordance with the preferred embodiment. As indicated in a block **200**, an image or test pattern description is provided. The image pattern description describes, for example, first and second test pattern images as illustrated and described with respect to FIGS. **3** and **4**.

The Table 1 provides an example of a test pattern description as follows:

TABLE 1

```
% Describe test pattern image features.
%       x increases from left to right
%       y increases from top to bottom
%   1. rectangular tile marker in tile coordinates
%       a. upper left corner (x=col, y=row)
%       b. size in pixels (width=cols, height=rows)
%   2. registration marks in tile coordinates
%       a. upper left corner (x=col, y=row) OF EACH, L->R, T->B
%       b. size in pixels (width=cols, height=rows)
%   3. vast array of dots in tile coordinates
%       a. upper left corner (x=col, y=row)
%       b. size in pixels (width=cols, height=rows)
%       c. dot repeat spacing (delx,dely)
%       d. valid range (for each tile if different)
    % general
img.tile.size = [1024,768];         % pix: width, height
    % discovery pattern
img.rect.ulc = [250, 250];          % pix: col, row
img.rect.size = [500, 300];         % pix: width, height
img.reg.ulc = [200, 200;            % pix: left-to-right,
               800, 200;            %      top-to-bottom
               200, 600;
               800, 600];
img.reg.size = [10, 10];            % pix: width, height
    % dot pattern
img.dots.ulc = [0, 0];              % pix: col, row
img.dots.size = [10, 10];           % pix: width, height
img.dots.repeat = [20, 20];         % pix: horiz, vert
img.dots.num = [51,39];             % dot: across, down
    % range of dots to include in the fit
img.dots.first = [1,1];   % dot: index of UL dot to include
img.dots.last = [51,39];  % dot: index of LR dot to include
```

Referring to FIG. **2**, tiled display tests pattern images are captured as indicated in a block **201**. Exemplary steps for collecting image data of the tiled display tests pattern images are illustrated and described with respect to FIG. **7**. Test pattern images are stored for use in later processing steps as indicated in a block **202**.

Next a tile array placement and layout determination is performed using the stored test pattern image data and the image pattern description, as indicated in a block **204**. An exemplary first ensemble included in the stored test pattern image data advantageously is used for the tile array placement and layout determination as illustrated and described

with respect to FIG. **5**. Exemplary steps of the tile array placement and layout determination procedure are illustrated and described with respect to FIG. **8**.

In FIG. **2**, next a tile registration measurement is performed using the stored test pattern image data and the image pattern description as indicated in a block **206**. The tile registration measurement uses a tile layout test pattern, for example, as shown in FIG. **5**. Exemplary steps of tile registration measurement are illustrated and described with respect to FIG. **9**. A dot grid estimate is stored as indicated in a block **207**.

A jitter and drift measurement routine is performed using the stored test pattern image data as indicated in a block **208**. The jitter and drift measurement uses ensembles including both first and second test pattern images, for example, as illustrated and described with respect to FIGS. **6**A, **6**B, **6**C, and **6**D. Exemplary steps of jitter and drift measurement procedure are illustrated and described with respect to FIG. **10**.

Next a dot grid measurement procedure is performed using the stored test pattern image data, the image pattern description and the stored dot grid estimate as indicated in a block **210** and resulting measured dot grid positions are stored as indicated in a block **212**. Exemplary steps of the dot grid measurement procedure are illustrated and described with respect to FIG. **11**.

A tile-to-camera map is calculated using the stored test pattern image data and the measured dot grid positions as indicated in a block **214**. Exemplary steps of the tile-to-camera map calculation procedure are illustrated and described with respect to FIG. **12**. The calculated tile-to-camera map is stored as indicated in a block **216**. Two-dimensional coordinate systems are used for each individual projected sub-image or projector image tile. A pixel addressing scheme of the frame buffer is used as a coordinate system for this image tile, for example, taking on values in the range (0 . . . 1023, 0 . . . 767) for pixels that can be illuminated. The digital camera used to make measurements introduces an intermediate coordinate system including the pixel coordinates of the detector in the camera **108**.

A camera-to-mural map is calculated using the stored test pattern image data and the measured dot grid positions as indicated in a block **218**. Exemplary steps of the camera-to-mural map calculation procedure are illustrated and described with respect to FIG. **13**. The calculated camera-to-mural map is stored as indicated in a block **220**. A global coordinate system for the mural or the entire tiled display is used to label physical points on the entire flat display surface. From the standpoint the tiled display, the stored camera-to-mural map uses a virtual frame buffer with virtual pixel coordinates in the form of row and column values, analogous to the frame buffer coordinates of the individual image tiles. The stored camera-to-mural map is a detailed and accurate mapping of pixels coordinates for each projector **102** in the array to a unified coordinate system for the entire mural.

A control and correction data generation routine is performed using the stored tile-to-camera map and the camera-to-mural map as indicated in a block **222**. Exemplary steps of the control and correction data generation are illustrated and described with respect to FIG. **14**.

Referring to FIGS. **3** and **4**, there are shown exemplary first and second test pattern images generally designated respectively by the reference characters **400**, **410** for use in the methods for aligning multi-projector display system **100** in accordance with the preferred embodiment. The illustrated first test pattern image **400** is optimized for determining tile layout. The illustrated second test pattern image **410** is optimized for detailed measurement of tile geometry. A basic projected image for each projector **102** fits on a single tile in the composite display. The tile layout is the overall layout of the array of sub-images or tiles from the array of projectors **102**. The illustrated first test pattern image **400** includes a central rectangular segment **402** and a plurality of registration marks **404** disposed at points relative to the corners of segment **402**. The illustrated second test pattern image **410** is a dot pattern including a generally uniform array of uniformly sized dots. It should be understood that the present invention is not limited to the illustrated dot pattern **410** of features, for example, various other shapes could be used within the second test pattern image **410**.

Referring now to FIG. **5**, there is shown an exemplary first ensemble test pattern image generally designated by the reference character **500** in accordance with the preferred embodiment that is used in the tile array placement and layout determination at block **204** of FIG. **2**. The illustrated first ensemble test pattern image **500** includes an array of 15 projectors **102**, each projecting the illustrated first test pattern image **400** shown in FIG. **3**.

Referring also to FIGS. **6**A, **6**B, **6**C, and **6**D, there are shown exemplary ensembles including both first and second test pattern images **400**, **410** generally designated respectively by the reference characters **600**, **602**, **604**, and **606** in accordance with the preferred embodiment. In the ensembles **600**, **602**, **604**, and **606**, each of second test pattern images **410** are separated by a respective first test pattern image **400** to accommodate tile overlap. A respective ensemble **600**, **602**, **604**, and **606** includes the second test pattern images **410** for each projector **102** in the array.

In accordance with features of the invention, the exemplary ensembles **500**, **600**, **602**, **604**, and **606** are used in the methods of the invention to densely sample the mapping between tile coordinates (labeled by pixel coordinates in the frame buffer driving the projector) and the camera coordinates with high contrast features in this case dots within ensembles **600**, **602**, **604**, and **606**. This approach minimizes our sensitivity to photometric issues. Also there is a benefit from the good statistics of the sheer number of features measured to determine a small number of model parameters. The methods of the invention enable determining to sub-pixel accuracy the mapping of individual projector tile pixels to the unified coordinate system of the tiled array mural. The methods of the invention enable this with a camera **108** that can have far fewer pixels than the mural.

In accordance with features of the invention, the total number of images exposed is minimized. The ideal would be to capture all of the necessary measurement data in a single exposure of the entire tiled array. For unblended or minimally overlapped tiled displays (where tiles do not overlap with their neighbors, the number of exposures needed is two in the current implementation. This could be reduced to a single image, for example, requiring more a priori information passed to the program or enhanced test pattern encoding. For tiled displays with significant tile-to-tile overlap, for example, 10%, it is possible to generate excellent results with the exemplary ensembles **500**, **600**, **602**, **604**, and **606**.

In accordance with features of the invention, the image analysis is direct, involving no iteration either with the measurement process or internally as a part of converging to a solution. The solution comes from a least-squares minimization of the measurements made from the input images against a simple parameterized model of the display that accounts in a general way for projector and camera alignment and optical distortion in their lenses.

One assumption made in the measurement of the tile geometry is that the array of projectors **102** has been aligned, though not necessarily perfectly. The assumption of array alignment is used to discover the general layout of the tiles in the array and again to create a mural coordinate system. In order to get the highest accuracy in our pixel mappings, the method of the invention relies on the assumption that misalignment and distortions introduce only smooth and slowly varying changes to the coordinates. This ensures that combining the measurement of many features will reduce the measurement noise effectively without forcing use of a particular parameterized model.

Referring to FIG. **7**, exemplary steps for collecting image data of the tiled display tests pattern images are illustrated. First basic test pattern images, such as the exemplary first and second test pattern images **400**, **410**, are created as indicated in a block **700**. Next ensemble test patterns, such as ensembles **500**, **600**, **602**, **604**, and **606** including the first and second test pattern images **400**, **410**, are created as indicated in a block **702**. Next a first ensemble tile layout image, such as the first ensemble **500**, is projected onto the tiled display as indicated in a block **704**. A digital image of the entire tiled display is capture as indicated in a block **706**. A next ensemble patterned image is projected onto the tiled display as indicated in a block **708**. Then a digital image of the entire tiled display is capture as indicated in a block **710**. It is determined whether the tiled display includes overlapping tiles as indicated in a decision block **712**. When overlapping tiles are not used, then only the captured images at blocks **706** and **710** are needed and the sequential steps return as indicated in a block **714**. Otherwise, when overlapping tiles are used, then for each remaining ensemble, the ensemble is projected onto the tiled display and the image captured as indicated in a block **716**. With overlapping tiles, in total five ensembles, such as ensembles **500**, **600**, **602**, **604**, and **606** are projected onto the tiled display and the images captured. Then the sequential steps return at block **714**.

Referring now to FIG. **8**, there are shown exemplary steps of the tile array placement and layout determination procedure of block **204** in FIG. **2** to determine the overall layout of the tiled array: total number of tiles, number of rows and columns in the array, and rough position of each tile in the camera coordinate system. A single image provides tile discovery, corner registration, and drift/jitter reference for correction in subsequent images referring to FIGS. **3** and **5**. The large monolithic rectangular region **402** at the center of each projected area is bright enough to qualify as bigger and brighter than anything else in the image, thereby simplifying the tile discovery process immensely.

First a binarization of the tile layout test pattern **500** is performed as indicated in a block **800**. The image **500** is thresholded at block **800** and then segment labeling is performed to separate the thresholded image into disjoint objects as indicated in a block **802**. Segment measurement, such as by area, extent, or the like is performed as indicated in a block **804**. The segments are sorted by area as indicated in a block **806**. These tile segments **402** rise to the top of a list of objects sorted from largest (by pixel area) to smallest at block **806**. After legitimate tiles in this list, come objects that are discarded by a simple threshold based on size. A threshold test for the tile rectangle segment **402** is performed as indicated in a block **808**. Then selected segments by x and y coordinates are sorted to deduce the regular array layout as indicated in a block **810**. Then the sequential operations return.

This method for tile array placement and layout determination is reasonably tolerant of oblique camera poses, which introduce size skew where objects further away will appear smaller and therefore sort to a lower position in the object list. It is fairly easy to extract total tile count with no a priori knowledge of the tiled array configuration. With little more effort, these tile objects are sorted by x and y coordinates at block **810** to deduce the number of rows and columns. This is most easily achieved by assuming that the array is regular and that the camera **108** is aligned with rows and columns along vertical and horizontal pixel coordinates. The brightness of both images in FIGS. **3** and **4** are arranged to be approximately the same to coerce the auto-gain on some cameras into the same range for all exposed images using any combination of these tile images across the array, for example, as shown in FIGS. **5**, **6**A, **6**B, **6**C, and **6**D.

Referring now to FIG. **9**, there are shown exemplary steps of the tile registration measurement procedure of block **206** in FIG. **2**. Tile registration measurement is accomplished by bootstrapping from the general layout measurements, registration points are measured in each tile that will be used later to seed the detailed measurement process, such as the dot grid measurement at block **210** in FIG. **2**.

Using the discovered tiles, identified by the large central tile rectangle segment **402**, the coordinates of the corners of the rectangular segments are identified as indicated in a block **900**. These corners are used to estimate the position of the four individual dots **404**, which serve as registration for later steps in the process. The test image description is used to estimate the positions of the registration marks **404** as indicated in a block **902**. A measured position for each of the four corner registration dots **404** is recorded for each of the N tiles as indicated in a block **904**. The measurement is made by first constructing a template with known shape parameterized by scale factors determined from the estimated corner feature positions. At block **904**, the template, for example, is used locally convolved with the image to find the peak measured to an accuracy of a fraction of a camera pixel.

Referring to FIG. **10**, exemplary steps of the jitter and drift measurement procedure of the invention are shown. Jitter and drift measurement uses ensembles including both first and second test pattern images, for example, as ensembles **600**, **602**, **604**, and **606** of FIGS. **6**A, **6**B, **6**C, and **6**D. For applications requiring a series of images, it is important to account for possible small image-to-image movements of the camera. To accomplish this, an average of the registration feature measurements are used, available in each image, as an indicator of overall image offset with respect to the first image. First each dot image is conditioned with a convolve template, for example, a Gaussian template can be used. Fiducial, such as registration marks **404** is measured where present in each dot ensemble image as indicated in a block **1002**. Displacement of the position of the measured registration marks from the estimated provided by measurement on the tile layout ensemble image is computed as indicated in a block **1004**. An average of the displacements measured on one dot image is equal to the drift or jitter displacement for that image and is used to correct all future measurements made on this dot image as indicated in a block **1006**. Then the above steps are repeated for each remaining dot image, when required with overlapping images, as indicated in a block **1008**. Then the sequential operations return as indicated in a block **1010**.

Referring to FIG. **11**, exemplary steps of the dot grid measurement procedure of block **210** of FIG. **2** are shown. The detailed mapping from tile frame buffer coordinates to

camera pixel coordinates is accomplished by measuring a large number of features with known tile coordinates. The image used includes fiducial pixels marked distinctively, which are far enough from the edge of the tile to avoid blending regions. Corner registration marks from the tile discovery phase correspond to these special fiducial pixels in the dot grid **410**. Bilinear interpolation and extrapolation provide estimates of the coordinates of all the dot features in the image. Armed with these estimates the individual dot positions are measured in the same way that the corner registration feature were measured, by autocorrelation with a constructed mask.

The dot measurements are fit to a model. In doing so, signal to noise gain is achieved by smoothing over individual dot measurements, and the ability to extrapolate coordinates beyond the available domain of measurable dots is enabled. This latter feature is useful when measuring blended overlapping tiles.

As indicated in a block **1100**, positions of dots in a tile are predicted from the test image description and measurement of the four registration marks, for example using bilinear approximation. Actual dot positions on the conditioned image are measured using the predicted positions as a starting place as indicated in a block **1102**. Spacing of the measured dot positions is measured as indicated in a block **1104**. The measured spacing is compared with the expected spacing, such as from the predicted position, providing an error metric as indicated in a block **1106**. Next a measurement matrix is corrected by moving measurement to adjacent spots/entries to minimize error metric as indicated in a block **1108**. All single measurement that are too far from the predicted positions are rejected as indicated in a block **1110**. The sequential steps are repeated for each tile in the array as indicated in a block **1112**. Then the sequential operations return as indicated in a block **1114**.

Referring to FIG. **12**, there are shown exemplary steps of the tile-to-camera map calculation procedure of block **214** of FIG. **2**. All measurable dot features are included in least squares fit, for example, to a 10 parameter bi-cubic model (for each of X and Y as in Equation 1, below) of the mapping. Any other suitable model is acceptable so long as it is able to represent the distortion from both the projector and camera optics. The chosen model is simple to implement, computationally efficient, and sufficiently accurate. In this step, the statistical errors in the measurement are smoothed, resulting in a significantly improved estimate of the mapping between any tile coordinate and the camera coordinate system. This is due to the very large number of features measured compared to the small number of parameters needed to model the mapping. The bi-cubic mapping from the kth tile coordinates to camera coordinates, in each of X and Y, is represented by the following equation, where index pair ij takes on 10 values. For each tile k the 10 coefficients for the X mapping are given by

$$A_k^{ij}$$

and the 10 coefficients for the Y mapping are given by

$$B_k^{ij}$$

$$(X, Y)_{camera} = \sum_{i=0}^{3} \sum_{j=0}^{i} \left(A_k^{ij}, B_k^{ij}\right) \cdot X_k^{i-j} \cdot Y_k^{j} \tag{1}$$

As indicated in a block **1200**, for the measured X camera coordinates of all dots in a single tile, a least-squares fit to a parameterized function of I, J is computed, for example, using a cubic function. Note that there are, for example, many hundreds to thousands of dots in a basic single tile test image. An example cubic function used, where $I \equiv X_T$ and $J \equiv Y_T$, is represented by:

$$\begin{aligned} X = A &+ \\ &B*I + C*J + \\ &D*I^2 + E*I*J + F*J^2 + \\ &G*I^3 + H*I^2J + K*I*J^2 + L*I^3 \end{aligned}$$

Next as indicated in a block **1202**, for the measured Y camera coordinates of all dots in a single tile, a least-squares fit to a parameterized function of I, J similarly is computed, for example, using a cubic function. This pair of X, Y functions provides detailed accurate relationship between tile (frame buffer) coordinates and camera coordinates as indicated in a block **1204**. The steps are repeated for each tile in the array as indicated in a block **1206**. Then the sequential operations return as indicated in a block **1208**.

Referring to FIG. **13**, there are shown exemplary steps of the camera-to-mural map calculation procedure of block **218** of FIG. **2**. A mural coordinate system from the measured dots is derived as follows. First the relative offsets are estimated between neighboring pairs of projectors by comparing coordinates along their shared borders. From this simplified model of tile-to-tile coordinate transformation an approximate camera-to-mural mapping is created. This method assumes that the tiles are essentially undistorted, have been aligned, and have similar zoom, deviations from these assumptions are smoothed out in the next steps. The approximate mapping is used to project measured tile dot positions through camera coordinates to this estimated mural coordinate system. Then the resulting multitude of dots is used to find a best fit in the least-squares sense of the measured dots in camera coordinates to their estimated mural coordinates. The fit produces, for example, a pair of 10 parameter bi-cubic equations relating camera pixel coordinates to our derived mural coordinate system. The form is identical to the tile-to-camera mappings and is shown in equation 2.

$$(X, Y)_{mural} = \sum_{i=0}^{3} \sum_{j=0}^{i} \left(A_{camera}^{ij}, B_{camera}^{ij}\right) \cdot X_{camera}^{i-j} \cdot Y_{camera}^{j} \tag{2}$$

For improved immunity to numerical precision errors, the A and B parameters in both equations (1) and (2) can be referred to centered and normalized coordinates. That is, X_{camera} can be replaced by $(X_{camera}-X_o)/X_{norm}$, to range between 0 and 1, and similarly for Y_{camera}. The A_{camera} and B_{camera} coefficients will be generally better behaved.

In FIG. **13**, as indicated in a block **1300** first rough tile offsets are estimated from neighbors, for example, near the border of neighboring tiles tile coordinates are computed for several points; then averaged for tile one and averaged for tile two and a difference is the estimate of relative offset of these tiles from one another. As indicated in a block **13092**, an offset is measured for each neighboring pair of tiles, for example, 7 offsets for a 3×2 tile array or 26 offsets for a 5×3 tile array. A model is provided for the tile to mural coordinates, for example, represented by:

(Xm, Ym)=(Xt, Yt)+(Xto, Yto), for t=1 to a Number_of_Tiles, where Xto, Yto represents offset. A least-squares fit to the model is computed using the measured neighbor offsets as indicated in a block **1306**. Using the model, positions of all dots in mural coordinates are computed as indicated in a block **1308**. Next by least-squares fit, the 10-parameter model as for tile coordinate for Xm=(Xc, Yc) and Ym=(Xc, Yc) is computed using camera coordinates and proposed mural coordinates as indicated in a block **1310**. Then the sequential operations return as indicated in a block **1312**.

Referring to FIG. **14**, there are shown exemplary steps of the control and correction data generation of block **222** of FIG. **2** using the final results from the analysis, the stored tile-to-camera map and the camera-to-mural map as indicated in a block **1400**. As indicated in a block **1402**, two-dimensional offsets are extracted from the tile-to-global coordinate mappings, and used to correct some of the measured pixel misalignment by adjusting the digital image for display. Pose parameters for each projector are extracted from the tile-to-global coordinate mappings can in turn be used to correct image rendering by adjusting the digital image applied to each projector **102** or modification to the projector alignment by control of respective positioner **104** as indicated in a block **1404**. This application can be implemented efficiently with the addition of a simple matrix operation in the graphics pipeline. The digital image content driving each projector can be modified to compensate for the measured pixel positions as indicated in a block **1406**. Also analysis of extracted two-dimensional offsets and pose parameters can be applied to motorized positioners **104** to vary alignment, orientation, and zoom of each projector **102** as indicated in a block **1408**.

In summary, methods of the invention enable successfully measuring the coordinate mapping between projector frame buffer and mural coordinate system. Assuming random errors are responsible for the uncertainty in measurements of the position of a single dot, then many dots can be measured to reduce the error down to a fraction of a projector pixel. For example, the Nikon CoolPix 950 with 1600×1200 pixels can image the entire display with a scale of roughly 3 projector pixels to 1 camera pixel. If the position of a dot is measured to better than 1 camera pixel, then by measuring the positions of 10 dots the estimate is improved by the square root of 10, or to better than ⅓ camera pixel that corresponds to better than a mural pixel. With many hundreds of dots per tile, it is possible to accurately determine many more of the projector-to-camera coordinate mapping parameters than just the relative position. Sampling the mapping densely with fine grain test pattern features improves measurement accuracy in many ways by reducing a number of potential sources of error. Among the advantages provided are: high-contrast feature easy to measure, statistical leverage on low-order mapping, low camera resolution compared with the display being measured, camera pixel errors, pixel saturation and bleeding, camera lens distortion details, and electrical noise. Limiting the number of measurement images reduces susceptibility to errors induced by frame-to-frame changes in camera position, camera zoom setting, and ambient lighting. Brightness balanced test patterns with registration features of test patterns **400**, **410** on all tiles for all images reduce frame-to-frame changes in exposure and enable accurate jitter and drift corrections.

While the present invention has been described with reference to the details of the embodiments of the invention shown in the drawing, these details are not intended to limit the scope of the invention as claimed in the appended claims.

What is claimed is:

1. A method for aligning multi-projector display systems comprising the steps of:

storing an image pattern description;

capturing tiled display test pattern images;

using said stored image pattern description and at least one of said captured tiled display test pattern images, identifying a tile array placement and layout;

using said stored image pattern description and at least one said captured tiled display test pattern image, performing a tile registration measurement;

using said stored image pattern description, and at least one of said captured tiled display test pattern images, performing a dot grid measurement to provide measured dot grid positions;

using at least one said captured tiled display test pattern images and said measured dot grid positions, calculating a tile-to-camera map;

using at least one of said captured tiled display test pattern images and said measured dot grid positions, calculating a camera-to-mural map; and

using said tile-to-camera map and said camera-to-mural map to generate control and correction data; said control and correction data being applied to selectively vary alignment of a plurality of projectors by control of respective associated positioners with the plurality of projectors.

2. A method for aligning multi-projector display systems as recited in claim **1** wherein said stored image pattern description image describes first and second test pattern images; said first test pattern image adapted for determining tile layout and said second test pattern image adapted for determining tile geometry.

3. A method for aligning multi-projector display systems as recited in claim **2** wherein said first test pattern image includes a generally centrally position large segment and a plurality of separate spaced apart registration marks.

4. A method for aligning multi-projector display systems as recited in claim **2** wherein said second test pattern image includes a generally uniform array of a plurality of dots.

5. A method for aligning multi-projector display systems as recited in claim **1** wherein the step of capturing tiled display test pattern images includes creating first and second test pattern images; said first test pattern image adapted for determining tile layout and said second test pattern image adapted for determining tile geometry.

6. A method for aligning multi-projector display systems as recited in claim **5** includes creating ensemble test patterns using said first and second test pattern images.

7. A method for aligning multi-projector display systems as recited in claim **6** includes creating a first ensemble test pattern for displaying said first test pattern image onto each projector tile of a multi-projector display.

8. A method for aligning multi-projector display systems as recited in claim **7** includes creating at least one second ensemble test pattern for displaying said second test pattern image onto each projector tile of the multi-projector display.

9. A method for aligning multi-projector display systems as recited in claim **8** includes the step of using a digital camera and capturing a digital image of said displayed first ensemble test pattern and said displayed at least one second ensemble test pattern.

10. A method for aligning multi-projector display systems as recited in claim **1** wherein the step of identifying said tile

array placement and layout includes binarizing one said captured tiled display test pattern image, identifying and measuring a plurality of segments of said binarized image, and sorting said plurality of segments to identify said tile array placement and layout.

11. A method for aligning multi-projector display systems as recited in claim **10** includes the step of identifying a predefined registration segment.

12. A method for aligning multi-projector display systems as recited in claim **11** wherein the step of performing said tile registration measurement includes the steps of identifying corners of said predefined registration segment; estimating and measuring positions of a plurality of registration marks relative to said identified corners of said predefined registration segment.

13. A method for aligning multi-projector display systems as recited in claim **1** further includes the steps of measuring camera jitter and drift; and applying correction based upon said measured camera jitter and drift to said dot grid measurement.

14. A method for aligning multi-projector display systems as recited in claim **1** wherein the step of performing said dot grid measurement to provide measured dot grid positions includes the steps of predicting positions of a plurality of dots in a displayed tile for each projector from said test image description; measuring actual dot positions within said displayed tile for each projector; measuring a spacing of said measured actual dot positions and comparing said measured spacing with an expected spacing from said predicted positions to provide an error metric.

15. A method for aligning multi-projector display systems as recited in claim **14** further includes minimizing an error metric by moving measurement to adjacent positions; and rejecting all single measurements identified above a set spacing from predicted positions.

16. A method for aligning multi-projector display systems as recited in claim **1** wherein the step of calculating said tile-to-camera map includes computing a least-squares fit of both measured X and Y camera coordinates to a parameterized function.

17. A method for aligning multi-projector display systems as recited in claim **16** wherein the step of calculating said camera-to-mural map includes computing a least-squares fit of both measured X and Y camera coordinates to a parameterized function.

18. A method for aligning multi-projector display systems as recited in claim **17** wherein said parameterized function including a cubic function.

19. A method for aligning multi-projector display systems as recited in claim **1** wherein the step of using said tile-to-camera map and said camera-to-mural map to generate said control and correction data includes at least one of: extracting two dimensional offsets from said tile-to-camera map and using said extracted two dimensional offsets to correct at least a portion of a measured misalignment; extracting pose parameters for each projector from said tile-to-camera map and using said extracted pose parameters to correct at least a portion of a measured misalignment.

20. A measurement engine for aligning multi-projector display systems comprising:

a plurality of projectors for projecting a digital source image onto multi-projector display to form a composite image;

a respective positioner associated with each of said plurality of projectors;

a camera for capturing tiled display test pattern images;

a computer for storing an image pattern description; said computer for performing the steps of:

using said stored image pattern description and at least one of said captured tiled display test pattern images, identifying a tile array placement and layout;

using said stored image pattern description and at least one said captured tiled display test pattern image, performing a tile registration measurement;

using said stored image pattern description, and at least one of said captured tiled display test pattern images, performing a dot grid measurement to provide measured dot grid positions;

using at least one of said captured tiled display test pattern images and said measured dot grid positions, calculating a tile-to-camera map;

using at least one of said captured tiled display test pattern images and said measured dot grid positions, calculating a camera-to-mural map; and

using said tile-to-camera map and said camera-to-mural map to generate control and correction data; said control and correction data being applied to selectively vary alignment of the plurality of projectors by control of respective associated positioners.

* * * * *