US007114858B2

(12) **United States Patent**
Gupta et al.

(10) **Patent No.: US 7,114,858 B2**
(45) **Date of Patent: Oct. 3, 2006**

(54) **LASER BASED IGNITION SYSTEM FOR NATURAL GAS RECIPROCATING ENGINES, LASER BASED IGNITION SYSTEM HAVING CAPABILITY TO DETECT SUCCESSFUL IGNITION EVENT; AND DISTRIBUTOR SYSTEM FOR USE WITH HIGH-POWERED PULSED LASERS**

(75) Inventors: **Sreenath Borra Gupta**, Naperville, IL (US); **Ramanujam Raj Sekar**, Naperville, IL (US); **Gregory E. Hillman**, Chicago Ridge, IL (US)

(73) Assignee: **The University of Chicago**, Chicago, IL (US)

(*) Notice: Subject to any disclaimer, the term of this patent is extended or adjusted under 35 U.S.C. 154(b) by 141 days.

(21) Appl. No.: **10/940,467**

(22) Filed: **Sep. 14, 2004**

(65) **Prior Publication Data**

US 2005/0063646 A1 Mar. 24, 2005

Related U.S. Application Data

(60) Provisional application No. 60/505,383, filed on Sep. 23, 2003.

(51) **Int. Cl.**

G02B 6/36	(2006.01)
F02B 19/00	(2006.01)
H01S 3/123	(2006.01)

(52) **U.S. Cl.** ..... **385/88**; 385/18; 385/25; 385/12; 385/92; 385/147; 372/15; 123/143 B

(58) **Field of Classification Search** ..... 385/12, 385/147, 88, 92, 18, 25; 123/143 B; 372/15
See application file for complete search history.

(56) **References Cited**

U.S. PATENT DOCUMENTS

5,983,871	A *	11/1999	Gordon et al.	123/536
6,796,278	B1 *	9/2004	Ryan, III	123/143 B
2003/0136366	A1 *	7/2003	Herdin et al.	123/143 B
2005/0063646	A1 *	3/2005	Gupta et al.	385/88

* cited by examiner

Primary Examiner—Brian M. Healy
(74) *Attorney, Agent, or Firm*—Joan Pennington

(57) **ABSTRACT**

A laser based ignition system for stationary natural gas engines, a distributor system for use with high-powered lasers, and a method of determining a successful ignition event in a laser-based ignition system are provided. The laser based ignition (LBI) system for stationary natural gas engines includes a high power pulsed laser providing a pulsed emission output coupled to a plurality of laser plugs. A respective one of the plurality of laser plugs is provided in an engine cylinder. The laser plug focuses the coherent emission from the pulsed laser to a tiny volume or focal spot and a high electric field gradient at the focal spot leads to photoionization of the combustible mixture resulting in ignition.

16 Claims, 10 Drawing Sheets

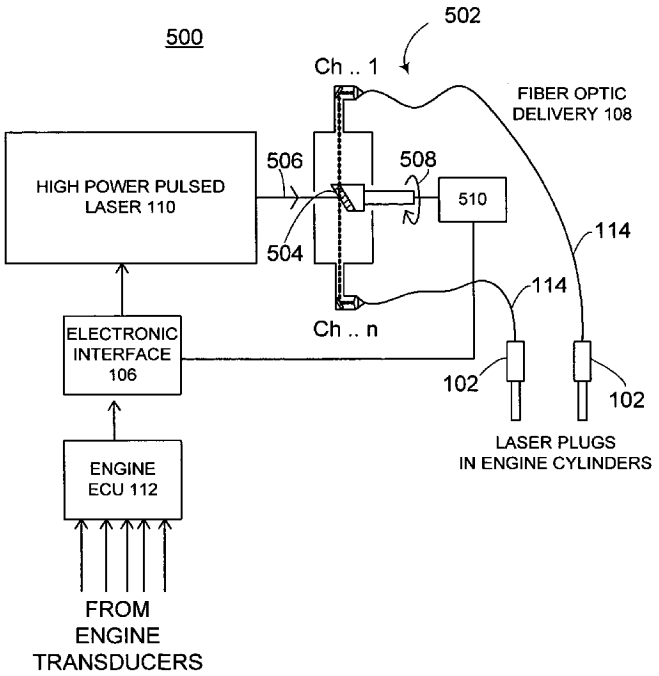

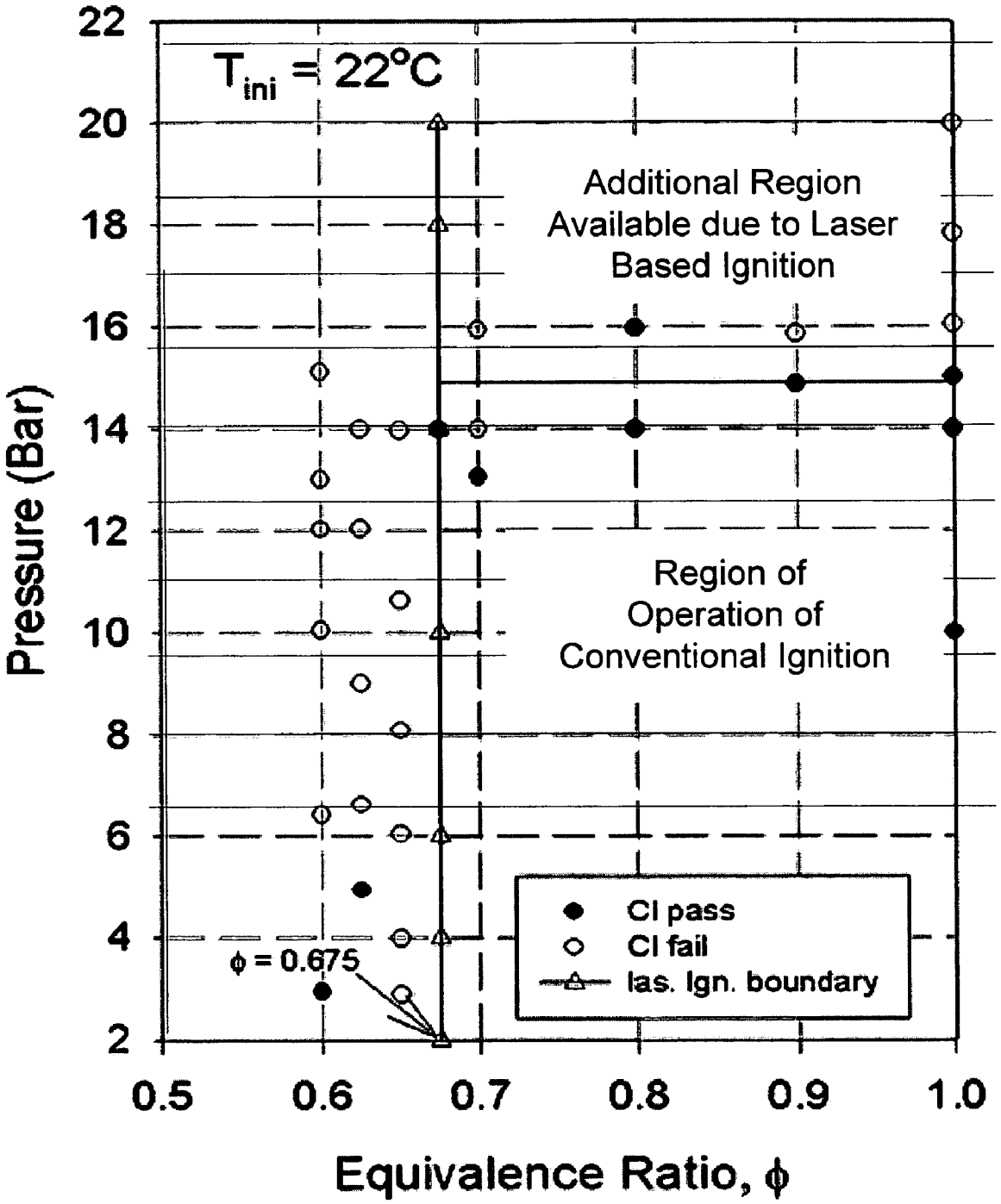
T_{ini} = 22°C
Additional Region Available due to Laser Based Ignition
Region of Operation of Conventional Ignition
CI pass
CI fail
las. Ign. boundary
ϕ = 0.675
Pressure (Bar)
Equivalence Ratio, ϕ
22
20
18
16
14
12
10
8
6
4
2
0.5
0.6
0.7
0.8
0.9
1.0

FIG. 1A

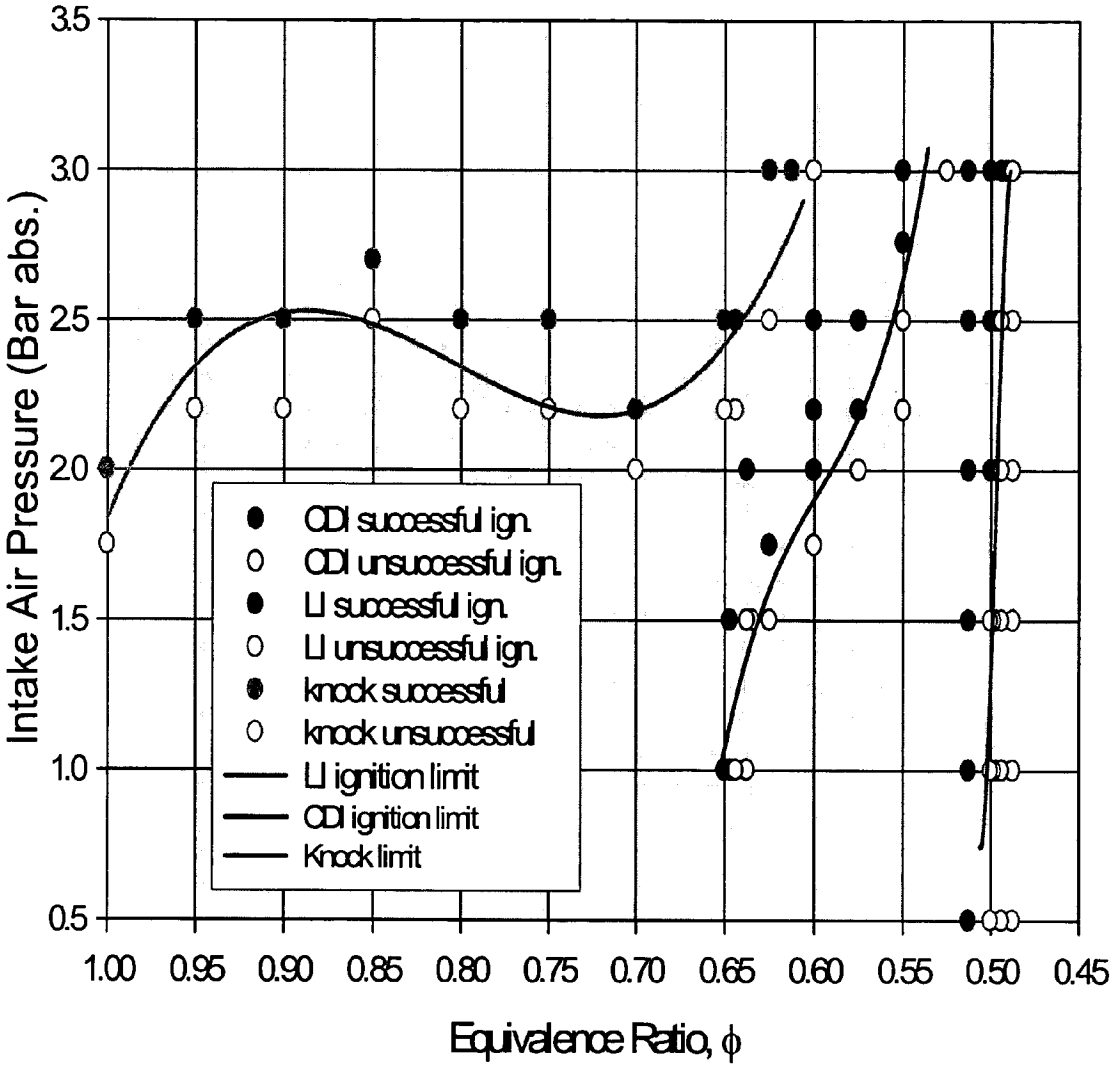
3.5
3.0
2.5
2.0
1.5
1.0
0.5
Intake Air Pressure (Bar abs.)
1.00
0.95
0.90
0.85
0.80
0.75
0.70
0.65
0.60
0.55
0.50
0.45
Equivalence Ratio, ϕ
CDI successful ign.
CDI unsuccessful ign.
LI successful ign.
LI unsuccessful ign.
knock successful
knock unsuccessful
LI ignition limit
CDI ignition limit
Knock limit

FIG. 1B

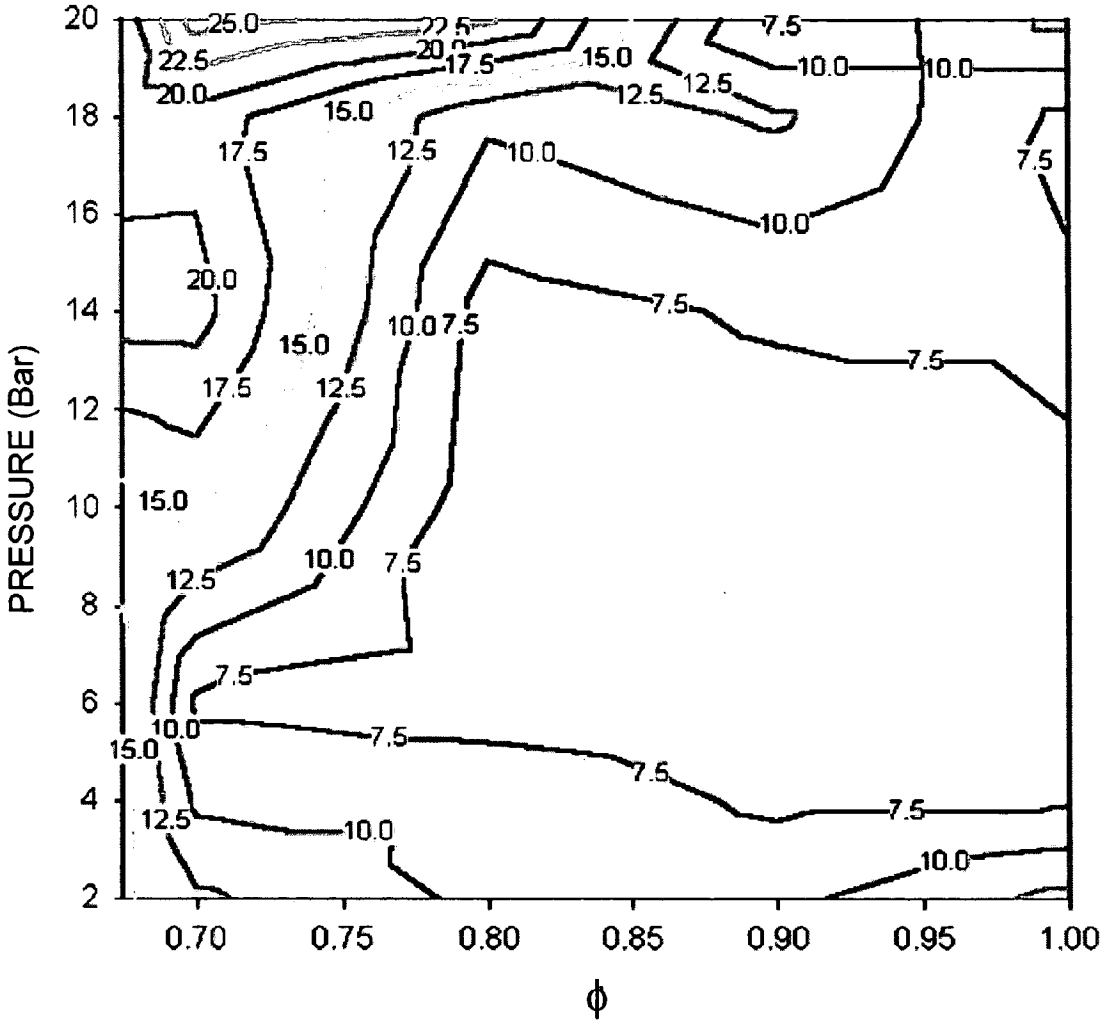
PRESSURE (Bar)
ϕ
20
18
16
14
12
10
8
6
4
2
0.70
0.75
0.80
0.85
0.90
0.95
1.00
25.0
22.5
20.0
17.5
15.0
12.5
10.0
7.5

FIG. 2

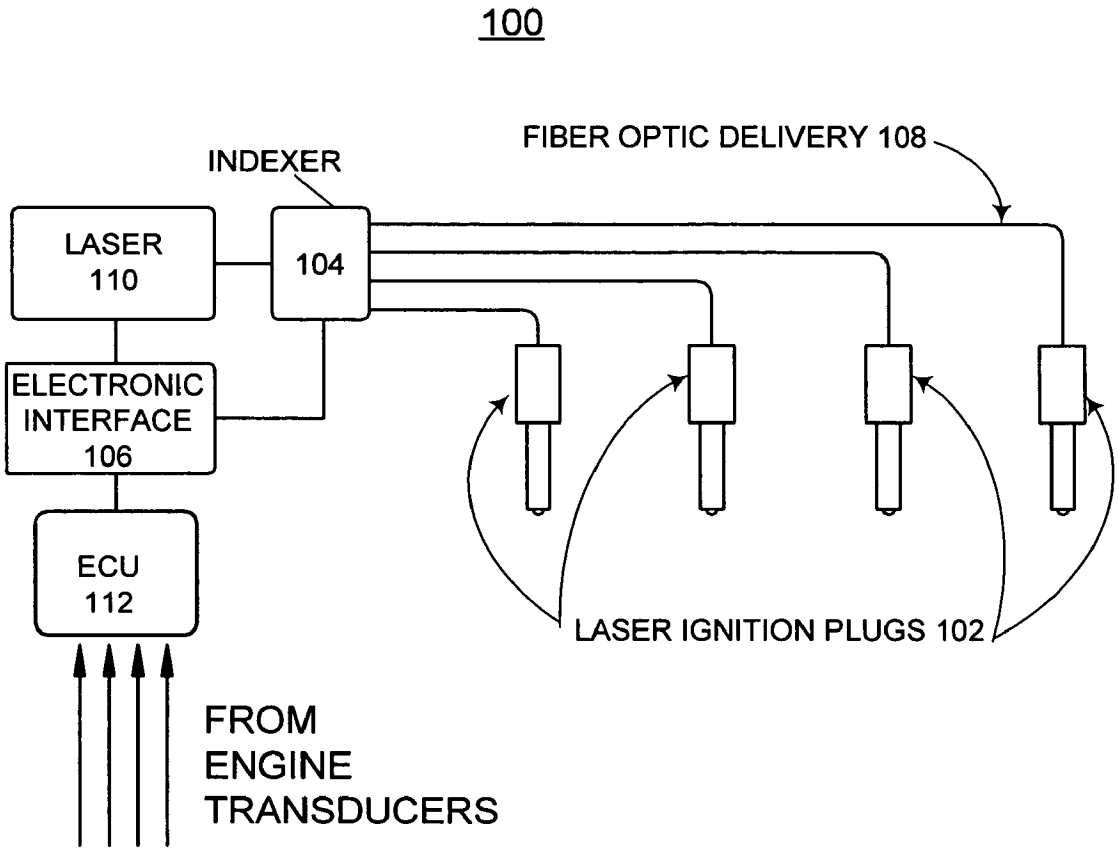
100
FIBER OPTIC DELIVERY 108
INDEXER
LASER
110
104
ELECTRONIC
INTERFACE
106
ECU
112
LASER IGNITION PLUGS 102
FROM
ENGINE
TRANSDUCERS

FIG. 3

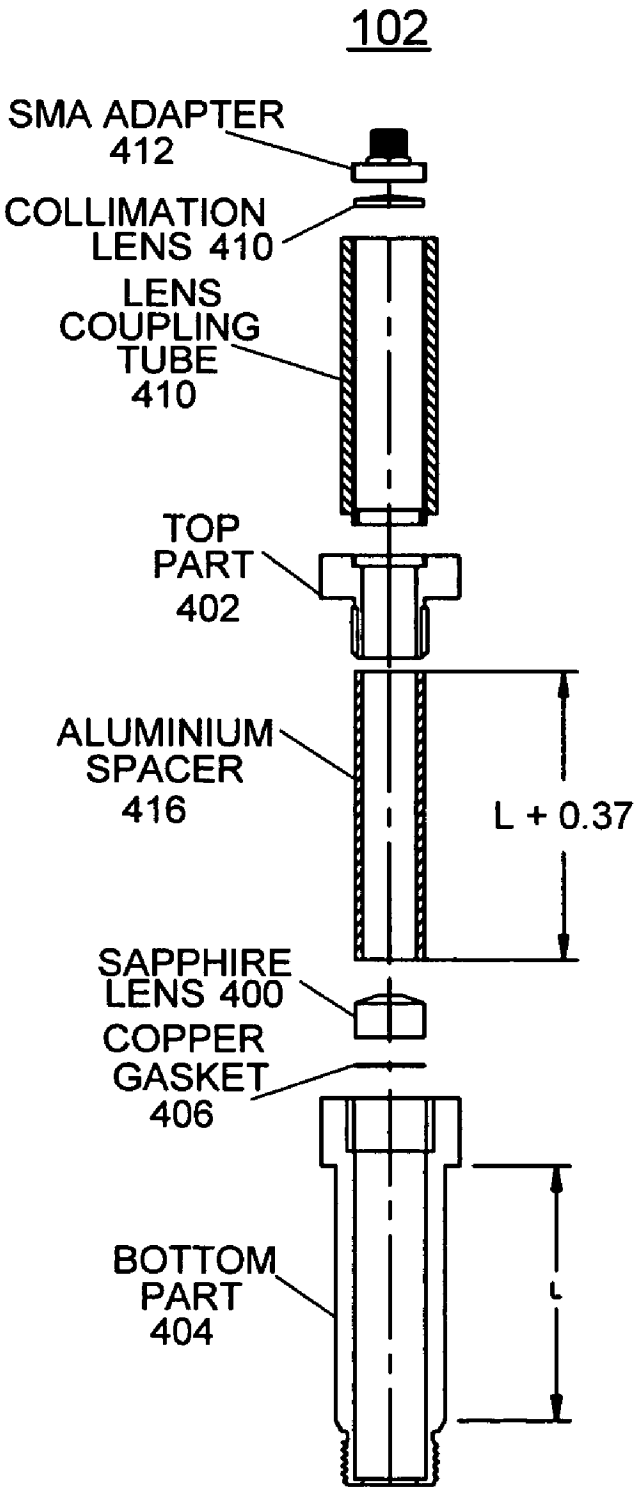
102
SMA ADAPTER
412
COLLIMATION
LENS 410
LENS
COUPLING
TUBE
410
TOP
PART
402
ALUMINIUM
SPACER
416
L + 0.37
SAPPHIRE
LENS 400
COPPER
GASKET
406
BOTTOM
PART
404
L

FIG. 4A

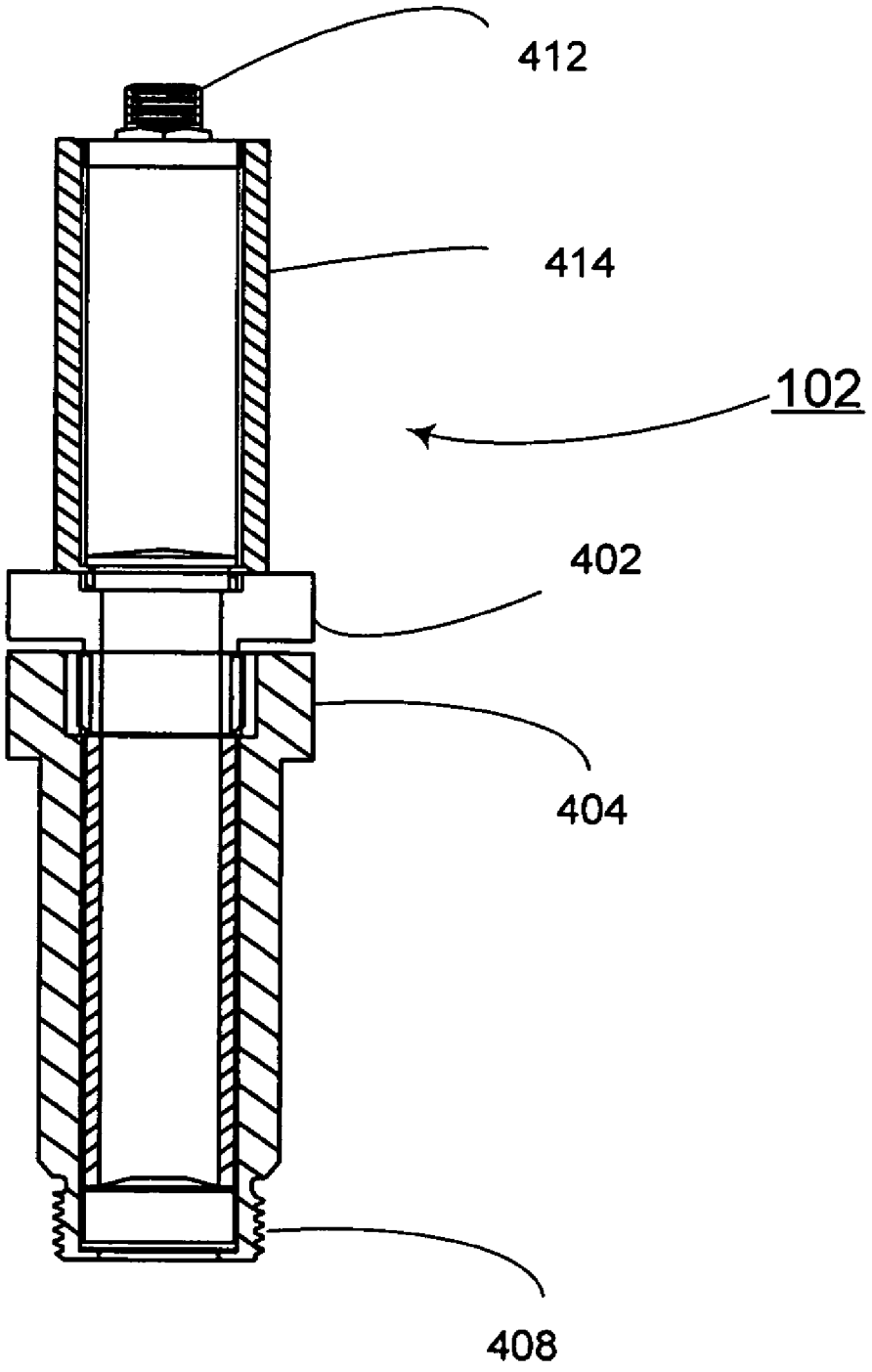

FIG. 4B

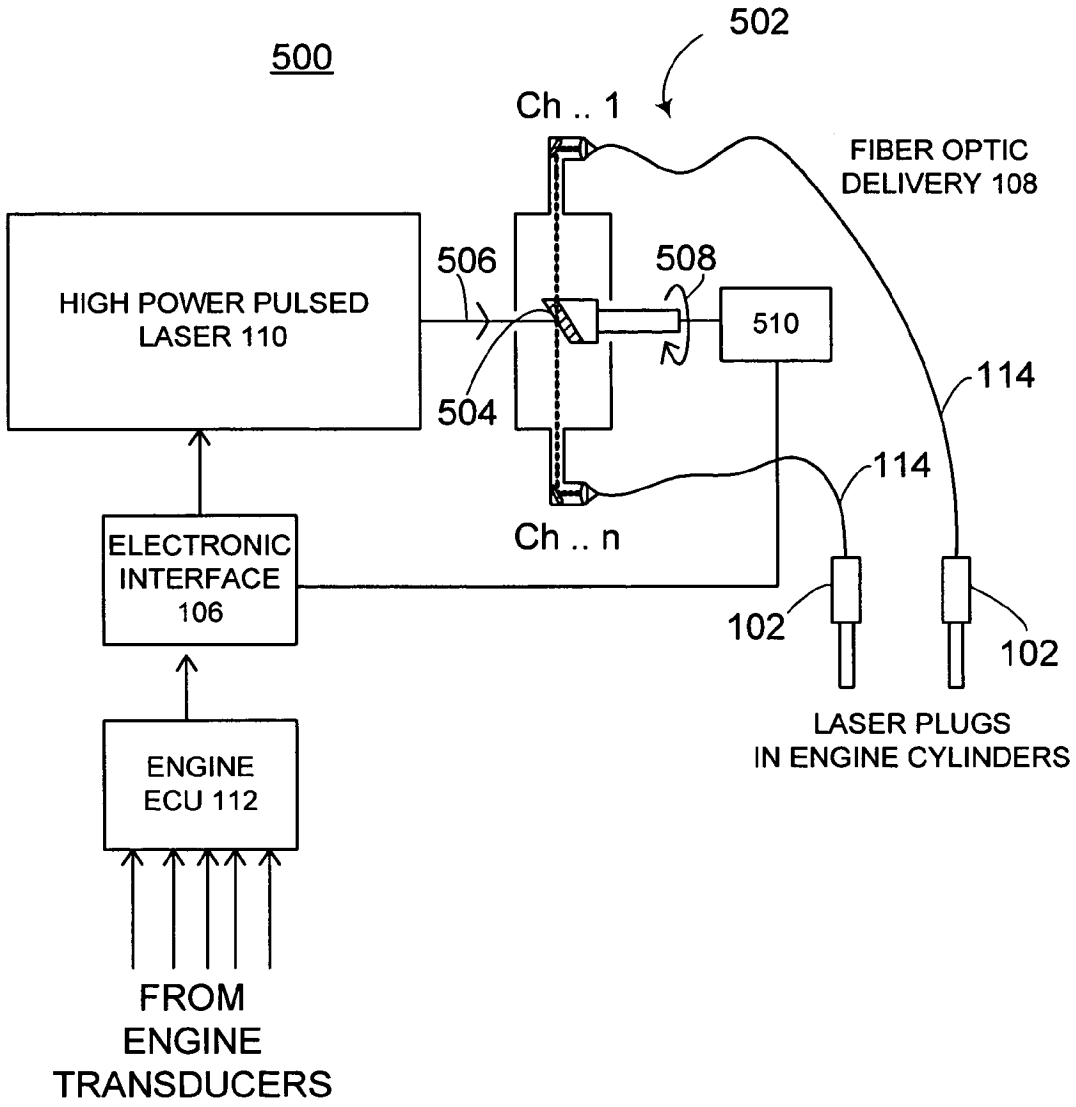
500
502
Ch .. 1
FIBER OPTIC
DELIVERY 108
HIGH POWER PULSED
LASER 110
506
508
510
504
114
114
Ch .. n
ELECTRONIC
INTERFACE
106
102
102
LASER PLUGS
IN ENGINE CYLINDERS
ENGINE
ECU 112
FROM
ENGINE
TRANSDUCERS

FIG. 5A

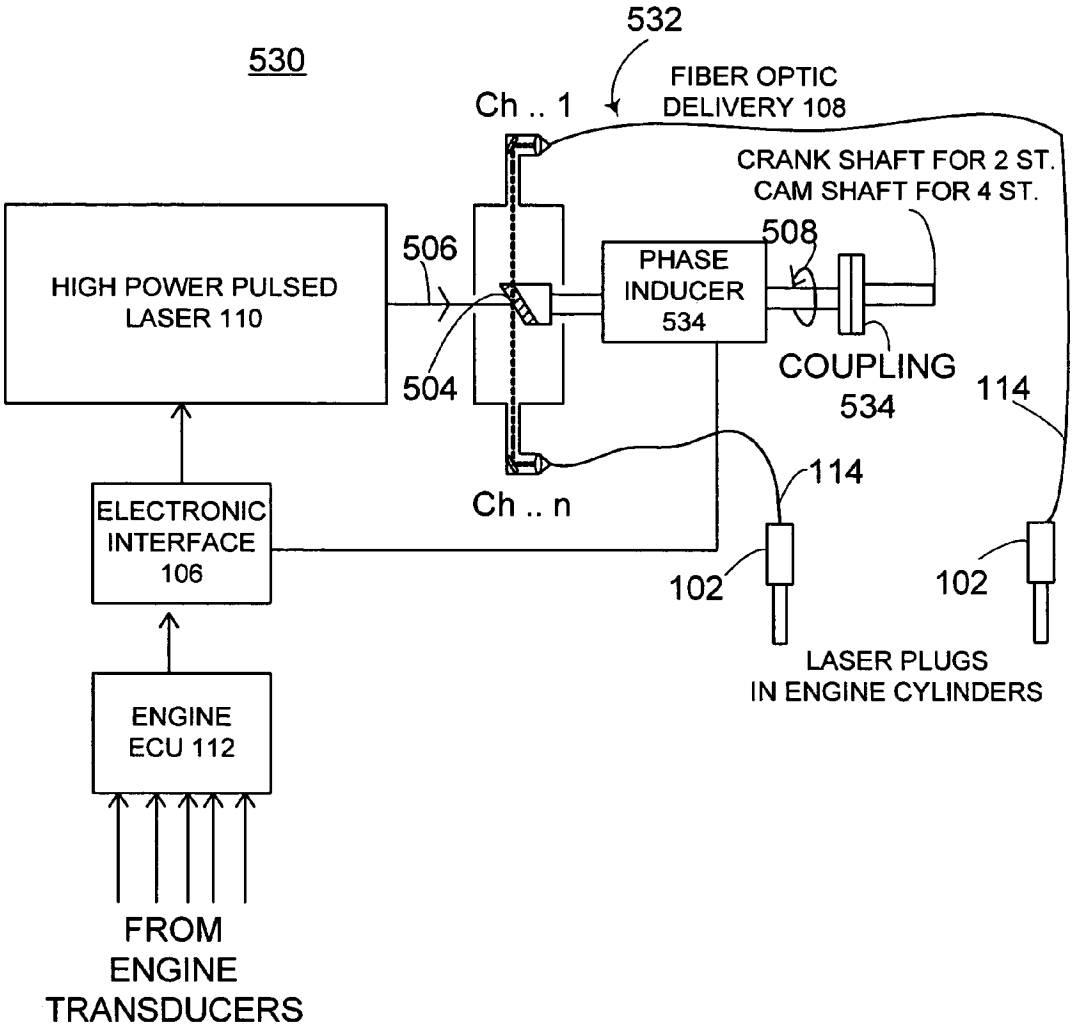
530
532
FIBER OPTIC
DELIVERY 108
Ch .. 1
CRANK SHAFT FOR 2 ST.
CAM SHAFT FOR 4 ST.
508
506
HIGH POWER PULSED
LASER 110
PHASE
INDUCER
534
504
COUPLING
534
114
114
Ch .. n
ELECTRONIC
INTERFACE
106
102
102
LASER PLUGS
IN ENGINE CYLINDERS
ENGINE
ECU 112
FROM
ENGINE
TRANSDUCERS

FIG. 5B

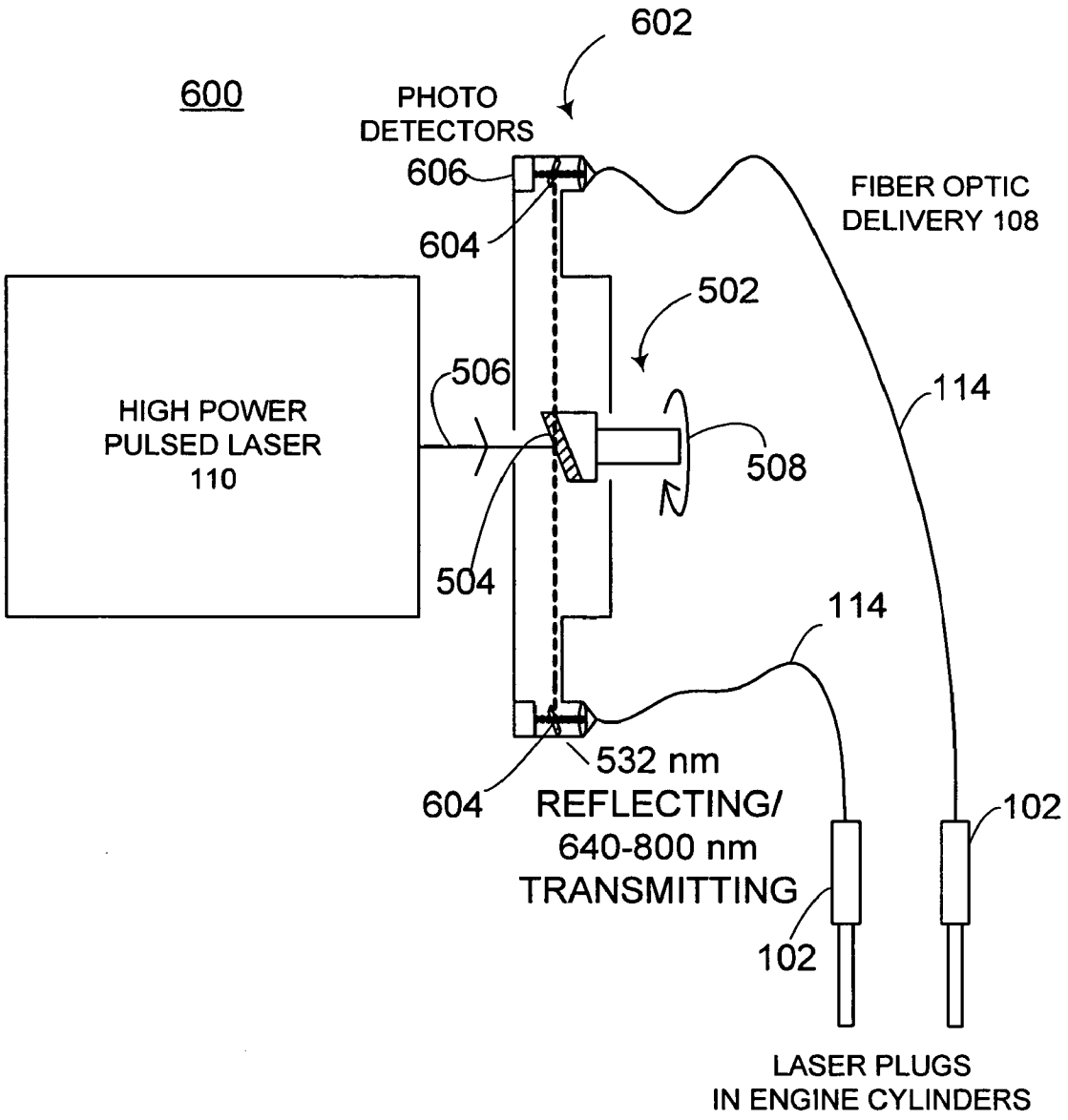
602
600
PHOTO
DETECTORS
606
604
FIBER OPTIC
DELIVERY 108
502
506
114
HIGH POWER
PULSED LASER
110
508
504
114
532 nm
604
REFLECTING/
640-800 nm
TRANSMITTING
102
102
LASER PLUGS
IN ENGINE CYLINDERS

FIG. 6

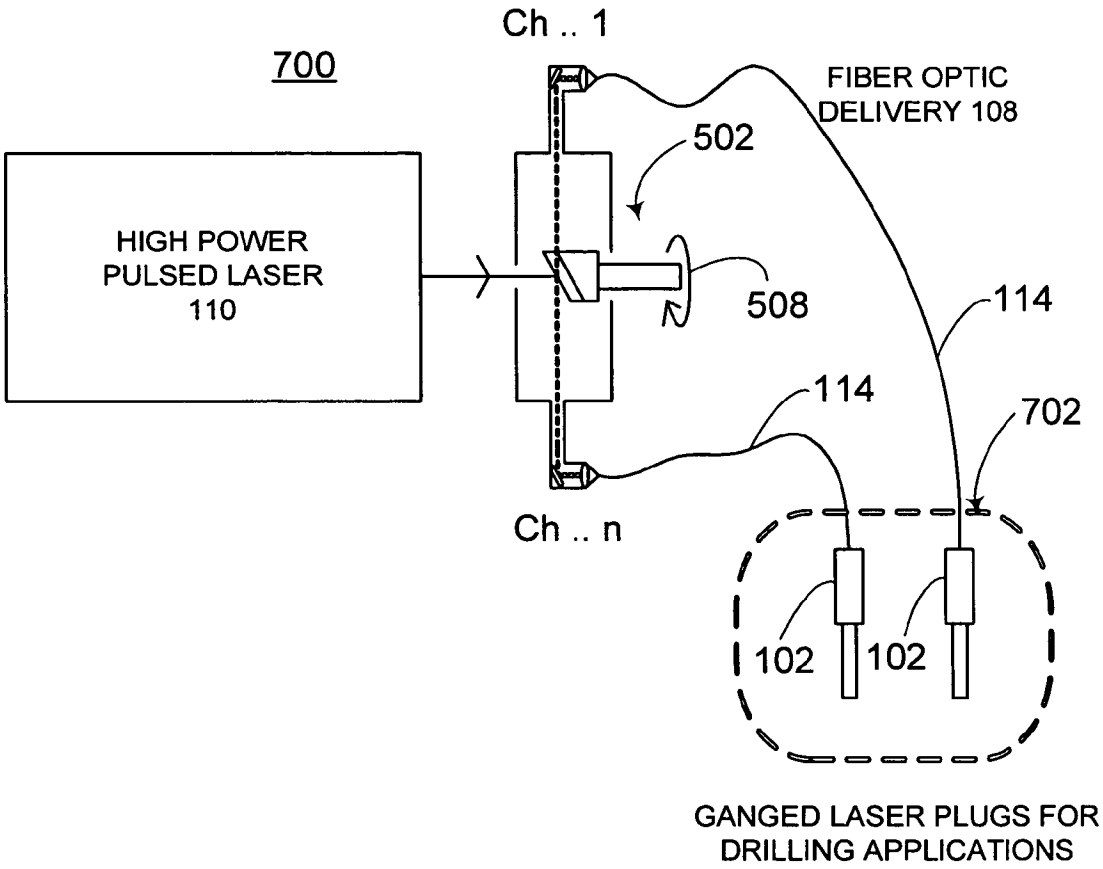
700
Ch .. 1
FIBER OPTIC
DELIVERY 108
502
HIGH POWER
PULSED LASER
110
508
114
114
702
Ch .. n
102
102
GANGED LASER PLUGS FOR
DRILLING APPLICATIONS

FIG. 7

LASER BASED IGNITION SYSTEM FOR NATURAL GAS RECIPROCATING ENGINES, LASER BASED IGNITION SYSTEM HAVING CAPABILITY TO DETECT SUCCESSFUL IGNITION EVENT; AND DISTRIBUTOR SYSTEM FOR USE WITH HIGH-POWERED PULSED LASERS

This application claims the benefit of U.S. Provisional Application No. 60/505,383, filed on Sep. 23, 2003.

CONTRACTUAL ORIGIN OF THE INVENTION

The United States Government has rights in this invention pursuant to Contract No. W-31-109-ENG-38 between the United States Government and Argonne National Laboratory.

FIELD OF THE INVENTION

The present invention relates to an improved ignition system for stationary natural gas engines, and more particularly to a laser based ignition system for stationary natural gas engines, a distributor system for use with high-powered lasers, and a method of determining a successful ignition event in a laser-based ignition system.

DESCRIPTION OF THE RELATED ART

The worsening power crisis in California has provided an impetus for DOE and industry to pursue newer technologies for natural gas burning reciprocating engines.

Stationary natural gas engines are currently used for power generation and pumping applications. The stationary natural gas engines typcially have up to 20 MW capacities, and 10–20 cylinders per engine. Natural gas engines are preferred over diesel engines because they are environmentally cleaner than diesel, and in certain locations, such as natural gas fields, natural gas is more readily available than diesel fuel.

Continuous developments over the last 15 years have resulted in high specific power levels and thermal efficiencies reaching ~46%. Also, a thrust for lower NO_x emissions has shifted operation of these engines from stoichiometric to lean operation. Lean operation along with the need to maintain high specific powers results in high in-cylinder charge densities. In such cases, manufacturers tend to adapt a base diesel engine frame with minor modifications to the fuel injection system. Though such adaptations are capable of withstanding very high in-cylinder pressures, current designs are operated well below their full potential due to limitations imposed by the ignition system, in particular, spark plugs.

Conventional ignition systems cannot provide voltages above 40 kV near the spark plug electrodes under high pressures in order to sustain reliable ignition. It is believed that overcoming this ignition problem alone can enhance the power output of these engines by an additional 20%.

The high charge densities in natural gas engines require voltages above this limit to sustain reliable ignition. Also, in conventional spark plugs, arc generation between the electrodes leads to erosion thereby requiring an adjustment of the spark gap after a period of operation. This leads to considerable engine down time resulting in increased operating costs. Alternatively, manufacturers have resorted to ignition using a diesel pilot injection system. However, this requires additional and expensive diesel injection hardware. Other sparkplug designs have proven to be less than totally successful.

Additionally, in conventional spark plugs arc generation between the electrodes leads to erosion thereby requiring an adjustment of the spark gap after a period of operation. Depending upon the supplier, the gap is adjusted every 1000 to 4000 hrs for optimal performance. Such a maintenance schedule, for multi-cylinder engines, adds considerably to the engine downtime.

As an alternative, some manufacturers have resorted to ignition using a diesel pilot injection. However, this requires additional and often expensive diesel injection hardware. Other advanced ignition concepts in these engines have proved less attractive.

Principal objects of the present invention are to provide a laser based ignition system for stationary natural gas engines, a distributor system for use with high-powered lasers, and a method of determining a successful ignition event in a laser-based ignition system.

SUMMARY OF THE INVENTION

In brief, a laser based ignition system for stationary natural gas engines, a distributor system for use with high-powered lasers, and a method of determining a successful ignition event in a laser-based ignition system are provided. A laser based ignition (LBI) system for stationary natural gas engines includes a high power pulsed laser providing a pulsed emission output coupled to a plurality of laser plugs. A respective one of the plurality of laser plugs is provided in an engine cylinder. The laser plug focuses the coherent emission from the pulsed laser to a tiny volume or focal spot and a high electric field gradient at the focal spot leads to photoionization of the combustible mixture resulting in ignition.

In accordance with features of the invention, the laser plug allows operation at high in-cylinder pressures and includes a sapphire lens sandwiched between a top member and a bottom member. A fiber delivery system includes a plurality of optical fibers coupled between a rotating mirror distributor and respective laser plugs for transmission of the pulsed laser beam output to laser plugs. The laser plug single is coupled to an optical fiber using a single plano-convex lens. The optical fiber is selected one of a fused silica step index fiber having a damage threshold of $\geqq 5$ GW/cm^2; a fused silica graded index fiber having a damage threshold of $\geqq 5$ GW/cm^2; a fused silica fiber having a tapered end at the launch end; a photonic crystal or bandgap fiber; or a hallow wave guide having metal/dielectric coatings on the inside for enhanced reflectivity, with or without having a taper at the launch end. The high power pulsed laser is selected one of a Q-switched Nd:YAG laser or a diode pumped solid state (DPSS) laser.

BRIEF DESCRIPTION OF THE DRAWINGS

The present invention together with the above and other objects and advantages may best be understood from the following detailed description of the preferred embodiments of the invention illustrated in the drawings, wherein:

FIG. **1A** is a chart illustrating boundaries of operation for conventional coil based ignition and laser based ignition for natural gas-air mixtures at room temperature and illustrates the extended region of operation that becomes available by the use of laser ignition with pressure (Bar) shown relative to the vertical axis and an equivalence ratio shown relative to the horizontal axis;

FIG. **1**B is a chart illustrating the boundaries of operation for conventional coil based (CDI) ignition and laser based ignition for natural gas-air mixtures and illustrates the extended region of operation that becomes available by the use of laser based ignition with engine intake pressure (Bar) shown relative to the vertical axis and an equivalence ratio shown relative to the horizontal axis;

FIG. **2** is a chart illustrating the minimum required energy (MRE) for successful ignition of natural gas-air mixtures at room temperature while using 7 ns laser pulses at 532 nm with pressure (Bar) shown relative to the vertical axis and an equivalence ratio shown relative to the horizontal axis;

FIG. **3** is a schematic diagram illustrating a laser based ignition system in accordance with the preferred embodiment;

FIG. **4**A is an exploded view illustrating an exemplary laser plug of the laser based ignition system of FIG. **3** in accordance with the preferred embodiment;

FIG. **4**B is an assembly view illustrating of the exemplary laser plug of FIG. **4**A of the laser based ignition system of FIG. **3** in accordance with the preferred embodiment;

FIG. **5**A is a schematic diagram of a laser based ignition system similar to FIG. **3** illustrating a rotating mirror distributor in accordance with the preferred embodiment;

FIG. **5**B is a schematic diagram of a laser based ignition system illustrating an alternative direct coupled rotating mirror distributor in accordance with the preferred embodiment;

FIG. **6** is a schematic diagram of a laser based ignition system similar to FIG. **3** illustrating an ignition event detection arrangement with the rotating mirror distributor of FIG. **5** in accordance with the preferred embodiment; and

FIG. **7** is a schematic diagram of a laser based ignition system illustrating a ganged laser plug arrangement for drilling and machining applications in accordance with the preferred embodiment.

DETAILED DESCRIPTION OF THE PREFERRED EMBODIMENTS

Having reference now to the drawings, in FIG. **1**A there is shown a chart illustrating that laser based ignition enables ignition of natural gas and air mixtures at pressures higher than those limited by the performance limits of conventional coil based ignition systems. Also in FIG. **1**B there is shown a chart illustrating that laser based ignition enables ignition of natural gas and air mixtures at equivalence ratios leaner than those limited by the performance limits of conventional coil based ignition systems. Such tests along with the fact that laser ignition is facilitated by higher pressures support operation of natural gas engines at high charge densities, which was not previously possible by using conventional ignition systems.

As shown in FIG. **2**, the minimum amount of energy required for laser based ignition is lower than 26 mJ/pulse. Such low laser energy requirements enable the use of small low-cost laser systems that are readily available commercially.

In accordance with features of the invention, in the laser based ignition systems of the preferred embodiment, the ignition kernel is generated by photoionization of the gas mixture thereby dispensing with the electrodes. As a result, the maintenance requirement to adjust the electrode gap is eliminated. Also, unlike in conventional ignition systems, the ignition kernel can be established far away from the wall. A centrally located flame front can further lower heat losses to the engine head. The resulting high thermal efficiencies lead to lower CO_2 emissions. Also leaner operation further reduces NO_x emissions. Though the associated benefits were apparent from research conducted over the last 40 years, laser based ignition has evaded implementation as many of the related components, such as lasers, fiber delivery systems, and the like, with desired performance were not available. In the laser based ignition systems of the preferred embodiment, solid state lasers with sufficient energy and frequency are commercially available at affordable prices making a laser based ignition system feasible.

Referring now to FIG. **3**, there is shown a laser based ignition (LBI) system generally designated by reference character **100** in accordance with the preferred embodiment. The LBI system **100** is comprised of five major components including a plurality of laser ignition plugs **102**, an indexer **104**, an electronic interface **106**, a fiber optic delivery system **108** and a laser **110**. In LBI system **100**, signals from various transducers are processed in an Engine Control Unit (ECU) **112** and appropriate timing signals are generated. The electronic interface **106** interprets these signals and provides appropriate firing signals to the laser **110**. The pulsed laser output is distributed by the indexer **104** to the appropriate laser plug **102** installed in a cylinder (not shown) via the fiber delivery system **108**. The fiber delivery system **108** includes a plurality of optical fibers **114** coupled between the indexer **104** and respective laser plugs **102** for transmission of the laser beam to laser plugs **102**.

In LBI system **100**, the laser ignition plugs **102** replace conventional ignition spark plugs in a multi-cylinder engine. The laser ignition plugs **102** have stainless steel housings, encasing a quartz or a sapphire insert that acts as lens, as shown in FIGS. **4**A and **4**B. These laser plugs **102** focus the coherent emission from the pulsed laser **120** to a tiny volume. The high electric field gradient at the focal spot leads to photoionization of the combustible mixture resulting in ignition. The electronic interface **106** receives signals from the engine electronic control unit (ECU) **112** and activates the laser **110** at the appropriate time relative to the crank shaft position. The electronic interface **110** along with the indexer **104** directs the laser emission to the appropriate cylinder for firing using the laser lugs **102** of the preferred embodiment.

In the system **100**, the laser plug **102** is considered to be the single most prominent technical hurdle. Such plug **102** advantageously is same thread size as a conventional spark plug to facilitate retrofits on existing engine withstand in-cylinder pressures, for example, up to 4000 psi, and temperatures, for example, up to 3000 K, and be self-cleaning of any deposits. Laser plug **102** of the preferred embodiment meets all of the above requirements and has additional benefits in terms of low-laser power requirements, and an ability to withstand poor beam quality.

Normal optical fibers that are mainly used in the telecommunications industry are designed for low-power laser transmissions. For the pulsed laser output that is used for the LBI system **100**, 532 nm or 1064 nm pulses; ~30 mJ/pulse and 7 ns pulse width, the fiber delivery system **108** includes optical fibers **114** of the preferred embodiment comprising of one of the following: (1) Fused silica step index fiber having a damage threshold of $\geqq 5$ GW/cm^2, (2) Fused silica graded index fiber having a damage threshold of $\geqq 5$ GW/cm^2, (3) A fused silica core fiber with a tapered end on the launch end and of the fiber, (4) Photonic bandgap fiber, or (5) hollow wave guide with metal/dielectric coatings on the inside for enhanced reflectivity, with or without having a taper at the launch end.

Laser **110** can be implemented for the laser energies required for the present LBI system **100** with one of various commercially available lasers. Laser **110** can be implemented, for example, with either Q-switched Nd:YAG lasers or the more recently available diode pumped solid state (DPSS) lasers.

Referring now to FIGS. **4**A and **4**B, an exemplary laser plug **102** in accordance with the preferred embodiment is shown. The laser plug **102** has a sapphire lens **400** sandwiched between a top member **402** and a bottom member **404**. A copper gasket **406** received within the top member **402** and bottom member **404** provides the required sealing. The laser plugs **102** are designed to have a standard spark plug thread size of M18×1.5 at a threaded portion **408** of the bottom member **404**. Sapphire lens **400** is transparent and has high material strength and ability to withstand thermal shock. However, due to high index of refraction the sapphire lens **400** has a first-surface reflectivity approximating 7%. The present design of sapphire lens **400** using a plano-convex lens as shown in FIG. **4**B facilitates focusing of the laser beam to facilitate gaseous dielectric breakdown, i.e., photo ionization, while avoiding undesirable hot spots within the lens material. Also, the laser fluence on the downstream side of the lens **400** is high enough to ablate away any combustion deposits (self-cleaning). The laser plug **102** shown in FIGS. **4**A and **4**B is coupled to the optical fiber **114** using a single plano-convex lens **410** and a SMA adapter **412**. A lens coupling tube **414** receives the single piano-convex collimation lens **410** and is coupled to the top member **402**. An aluminum spacer **416** is received within the bottom member **404**.

Referring now to FIG. **5**A, there is shown a laser based ignition (LBI) system **500** with the same reference characters shown for identical and similar components as the LBI system **100** to FIG. **3**. LBI system **500** illustrates a rotating mirror distributor generally designated by reference character **502** in accordance with the preferred embodiment. In system **500**, a rotating mirror **504** is driven in sync with the engine rotation by a motor **510**. A phase difference between the motor **510** and the engine is monitored by the engine ECU **112** to retard or advance the ignition timing.

To make laser ignition economically viable, the distribution of the pulsed output from a single Nd:YAG laser **110** is provided to multiple cylinders of a multi-cylinder engine by the rotating mirror distributor **502**. The rotating mirror distributor **502** enables the distribution of pulsed laser output from the high-power laser **110** sequentially among various channels **1**-n, and is suitable for use in an internal combustion natural gas powered reciprocating engine. Though there are low power optical multiplexing/demultiplexing systems readily available there are no such equivalents available for high power laser applications.

The rotating mirror distributor **502** has, for example, the first surface mirror **504**, with sufficient damage threshold, inclined at 45° to the incoming laser beam indicated by a dashed line **506**. This mirror **504** is rotated along the axis of the laser beam **506** as indicated at a line **508** to distribute the beam among various channels **1**-n placed along the peripheries of the distributor **502**. The distributed output from each channel **1**-n is launched into optical fibers **114** for transmission to laser plugs **102** placed in each of the engine cylinders. The rotating mirror **504** is mechanically driven by a motor **510** while maintaining phasing with the crank shaft using the electronic interface **106**.

The rotating mirror **504** is mechanically driven by motor **510** that maintains phasing with the crank shaft with the motor **510** operatively controlled by the electronic interface **106** of the preferred embodiment. Additionally the electronic interface **106** provides the firing signal for the pulsed laser **110**. Such electronic interface **106** of the preferred embodiment allows adjustment of the ignition timing for engine optimization.

Referring now to FIG. **5**B, there is shown another laser based ignition (LBI) system **530** with the same reference characters shown for identical and similar components as the LBI system **100** to FIG. **3** and LBI system **500** of FIG. **5**A. LBI system **530** provides an alternate way of achieving the same function as LBI system **500**. Though simpler and cheaper in construction, this LBI system **532** requires direct coupling of the rotating mirror **504** to the engine. LBI system **530** illustrates a rotating mirror distributor **532** including a phase inducer **534** and a coupling **536** directly coupled to the engine indicated by Crank Shaft for 2 stroke engine or Cam Shaft for 4 stroke engine. The intermediate phase inducer **534** coupled to the electronic interface **106**, and whose position is monitored by the engine ECU **112**, is used to advance or retard the ignition timing.

In the turbo-charged, lean-burn engines that are currently used, the engines are operated close the ignition limits and knock limits of the gas-air mixture in order to keep the NOx emission low while maintaining sufficient efficiencies. In such systems various factors can influence ignition in any of the engine cylinders resulting in misfiring, thereby leading to undesirable fuel loss and increased Unburnt Hydrocarbon (UHC) Emissions. In such cases it is very desirable to have a capability to detect unsuccessful ignition event, i.e., misfiring in any of the cylinders. To this end the LBI system **500** of FIG. **5**A or the LBI system **530** of FIG. **5**B advantageously is modified as shown in FIG. **6**.

FIG. **6** illustrates a laser based ignition (LBI) system **600** with the same reference characters shown for identical and similar components as the LBI system **100** to FIG. **3**. LBI system **600** illustrates an ignition event detection arrangement generally designated by reference character **602** with the rotating mirror distributor **502** of FIG. **5** in accordance with the preferred embodiment.

In such LBI system **600**, the pulsed 532 nm output from a Nd:Yag laser **110** is focused to a tight spot to achieve laser fluences in excess of 10^{12} W/cm^2. Under such laser fluences gaseous breakdown occurs resulting in a plasma which in turn initiates ignition of the natural gas-air mixture. The process of plasma formation and subsequent combustion are dominated by radiant emission in the 640 to 800 nm range. By detecting such photo emission with ignition event detection arrangement **602** it is possible to get an indication of a successful ignition event.

In accordance with features of the preferred embodiment, by detecting photo emission it is possible to get an indication of a successful ignition event and apparatus for detecting a misfiring cylinder in a multi-cylinder natural gas engine is provided. In accordance with features of the preferred embodiment, the output from the laser **110** is distributed by the rotating mirror **504** to a series of dichroic mirrors **604** that reflect the 532 nm beam and pass it through the fibers **114** to the laser plugs **102** in the engine cylinders, while transmitting in the 640 to 800 nm range. Thus a successful ignition from the pulsed 532 nm beam, results in a photo-emission between 640 and 800 nm which is transmitted back through the fiber **114** through the dichroic mirror **604** and is collected by a silicon photo detector **606**.

The ignition event detection arrangement **602** includes a series of dichroic mirrors **604**, each having an associated photo detector **606**. In LBI system **600**, the output from the laser is distributed by the rotating mirror to the series of

dichroic mirrors **604** that reflect the 532 nm beam and transmit it through the fibers **114** to the laser plugs **102** in the cylinders. When a successful ignition event occurs, it results in a photoemission between **640** and 800 nm which is transmitted back through the fiber through the dichroic mirror **604** and is collected by the silicon photo detector **606**.

Lack of the appropriate emission to the photo detector **606** indicates misfiring immediately calling for remedial action. Such a capability can be used either for indicative purpose or for feed-back control.

The principles of the present invention can be used in various other applications. One such application is drilling for oil deposits. Though ample deposits of crude oil are available at large depths, drilling through the earths crust in order to reach such deposits is difficult. The pressures at such depths lead to early erosion of mechanical drills. While drilling using pulsed CO_2 lasers is possible, the material removed is limited to the focal spot of the beam. In such applications, the material removal area can be increased by ganging the laser plugs, while the pulsed laser output is distributed among them. FIG. **7** schematically represents such an application

FIG. **7** is a schematic diagram of a laser based ignition (LBI) system **700** with the same reference characters shown for identical and similar components as the LBI system **100** to FIG. **3**. LBI system **700** illustrates a ganged laser plug arrangement generally designated by reference character **702** for drilling and machining applications in accordance with the preferred embodiment.

While the present invention has been described with reference to the details of the embodiments of the invention shown in the drawing, these details are not intended to limit the scope of the invention as claimed in the appended claims.

What is claimed is:

1. A laser based ignition (LBI) system for stationary natural gas engines comprising:

a high power pulsed laser providing a pulsed emission output;

a plurality of laser plugs coupled to said high power pulsed laser; a respective one of said plurality of laser plugs being provided in an engine cylinder; and each said laser plug focuses a laser emission output from said pulsed laser to a focal spot having a high electric field gradient at said focal spot for photoionization of a combustible mixture resulting in ignition;

a rotating mirror distributor and a fiber optic delivery system coupled between said high power pulsed laser and said plurality of laser plugs;

said optical fiber being selected one of a fused silica step index fiber having a damage threshold of $\geqq 5$ GW/cm^2; a fused silica graded index fiber having a damage threshold of $\geqq 5$ GW/cm^2; a fused silica fiber having a tapered end at the launch end; a photonic bandgap fiber; or a hallow wave guide having metal/dielectric coatings on an inside.

2. A laser based ignition (LBI) system as recited in claim **1** wherein said fiber optic delivery system includes a plurality of optical fibers coupled between said rotating mirror distributor and respective laser plugs for transmission of the pulsed laser beam output to laser plugs.

3. A laser based ignition (LBI) system for stationary natural gas engines comprising:

a high power pulsed laser providing a pulsed emission output;

a plurality of laser plugs coupled to said high power pulsed laser; a respective one of said plurality of laser plugs being provided in an engine cylinder; and each said laser plug focuses a laser emission output from said pulsed laser to a focal spot having a high electric field gradient at said focal spot for photoionization of a combustible mixture resulting in ignition;

a rotating mirror distributor and a fiber optic delivery system coupled between said high power pulsed laser and said plurality of laser plugs;

each said laser plug being coupled to an optical fiber using a single plano-convex lens.

4. A laser based ignition (LBI) system as recited in claim **1** wherein each said laser plug allows operation at high in-cylinder pressures and includes a sapphire lens sandwiched between a top member and a bottom member.

5. A laser based ignition (LBI) system as recited in claim **1** wherein said high power pulsed laser is selected one of a Q-switched Nd:YAG laser or a diode pumped solid state (DPSS) laser.

6. A laser based ignition (LBI) system as recited in claim **1** includes a rotating mirror distributor enabling the distribution of said pulsed laser output from said high-power laser sequentially to multiple channels for respective laser plugs.

7. A laser based ignition (LBI) system as recited in claim **6** wherein said rotating mirror distributor includes of a first surface mirror having a predefined damage threshold and inclined relative to an incoming laser beam; and said mirror is rotated along an axis of the laser beam to distribute said pulsed laser output from said high-power laser sequentially to multiple channels for respective laser plugs.

8. A laser based ignition (LBI) system as recited in claim **7** includes an electronic interface; said rotating mirror being arranged for a selected one of being mechanically driven by a motor or being directly coupled to the engine and where a phase difference is operatively controlled by said electronic interface and said electronic interface providing a firing signal for said high power pulsed laser.

9. A laser based ignition (LBI) system as recited in claim **7** includes a optical fiber for each of said multiple channels to distribute said pulsed laser output from said high-power laser sequentially for respective laser plugs.

10. A laser based ignition (LBI) system as recited in claim **9** includes an ignition event detector coupled to said rotating mirror distributor.

11. A laser based ignition (LBI) system as recited in claim **10** wherein said ignition event detector includes a series of dichroic mirrors, each having an associated photo detector coupled to said optical fiber.

12. A laser based ignition (LBI) system as recited in claim **11** wherein a successful ignition event results in a photoemission is transmitted back through said optical fiber through said dichroic mirror and is collected by said associated photo detector.

13. A laser based ignition (LBI) system for stationary natural gas engines comprising:

a high power pulsed laser providing a pulsed laser output;

an electronic interface coupled to said high power pulsed laser for controlling timing of said pulsed laser output;

a plurality of laser plugs; a respective one of said plurality of laser plugs being provided in an engine cylinder;

a rotating mirror distributor coupled to said electronic interface and said plurality of laser plugs by a fiber optic delivery system; said rotating mirror distributor enabling sequential distribution of said pulsed laser output from said high-power laser to said laser plugs; each said laser plug focusing a laser emission output from said pulsed laser to a focal spot having a high

electric field gradient at said focal spot for photoionization of a combustible mixture resulting in ignition;

said fiber optic delivery system including a plurality of optical fibers, each being coupled between said rotating mirror distributor and a respective laser plug for transmission of the pulsed laser beam output to laser plugs; and

an ignition event detector coupled to said rotating mirror distributor including a series of dichroic mirrors, each having an associated photo detector coupled to one said optical fiber; and wherein a successful ignition event results in a photoemission being transmitted back through said optical fiber through said dichroic mirror and being collected by said associated photo detector.

14. A laser based ignition (LBI) system as recited in claim **13** wherein said high power pulsed laser is selected one of a Q-switched Nd:YAG laser or a diode pumped solid state (DPSS) laser.

15. A laser based ignition (LBI) system as recited in claim **13** wherein each said optical fibers is a selected one of a fused silica step index fiber with 1 mm diameter core and having a damage threshold of $\geqq 1$ GW/cm^2; a fused silica core fiber with a tapered end on the launch end and of 1 mm diameter core; or a photonic crystal fiber.

16. A laser based ignition (LBI) system for stationary natural gas engines comprising:

a high power pulsed laser providing a pulsed laser output;

an electronic interface coupled to said high power pulsed laser for controlling timing of said pulsed laser output;

a plurality of laser plugs; a respective one of said plurality of laser plugs being provided in an engine cylinder;

a rotating mirror distributor coupled to said electronic interface and each of said plurality of laser plugs by an optical fiber; said rotating mirror distributor enabling sequential distribution of said pulsed laser output from said high-power laser to said laser plugs; each said laser plug focusing a laser emission output from said pulsed laser to a focal spot having a high electric field gradient at said focal spot for photoionization of a combustible mixture resulting in ignition; and

an ignition event detector coupled to said rotating mirror distributor including a series of dichroic mirrors, each having an associated photo detector coupled to said optical fiber; and wherein a successful ignition event results in a photoemission being transmitted back through said optical fiber through said dichroic mirror and being collected by said associated photo detector.

* * * * *