Coal Char Gasification in an Electrofluid Reactor

T. M. Knowlton, A. H. Pulsifer, and T. D. Wheelock

Department of Chemical Engineering and Engineering Research Institute
Iowa State University
Ames, Iowa

Introduction

The use of an electrofluid reactor for the production of synthesis gas from coal char and steam is being investigated. In this type of reactor heat is supplied electrically by passing current between electrodes which are placed in a gas-fluidized bed of conducting particles. Thus, in effect, the fluidized bed is a resistance heater. Preliminary experiments have been carried out in a 4-in.-diam, bench-scale reactor. Some typical results of the batch gasification runs are presented, together with information about the electrical characteristics of the system and a discussion of problem areas.

The previously reported work on the gasification of carbonaceous materials with steam is extensive and several reviews of this work are available (22, 23). At one atmosphere, the primary reactions are

(1) $C + H_2O = CO + H_2$

(2) $CO + H_2O = CO_2 + H_2$.

The rate of reaction 2, the water-gas shift reaction, is rapid above 1600°F and approaches equilibrium. The carbon-steam reaction, reaction 1, goes essentially to completion if allowed to reach equilibrium. The steam decomposition via this reaction, then, depends on the residence time and reaction rate. Methane-forming reactions can be ignored at atmospheric pressure since the equilibrium constants are extremely small.

The carbon-steam reaction is heterogeneous and occurs by a series of diffusional and chemical steps. The rate of the chemical steps follow a Langmuir-type rate equation of the form

$$\text{Rate} = \frac{k_1 p_{H_2O}}{1 + k_2 p_{H_2} + k_3 p_{H_2O}}$$

where k_1, k_2, k_3 = kinetic rate constants

p_{H_2O} = partial pressure of steam

p_{H_2} = partial pressure of hydrogen.

Since k_1 increases with increasing temperature, while k_2 and k_3 decrease, the apparent order of the reaction with respect to steam varies from 0 to 1 depending upon the temperature. Hydrogen has a strong inhibiting effect on the reaction and k_2 is large.

As noted, the electrofluid reactor is an electrically heated, fluidized bed of conducting solids. It offers several important advantages over other systems for carrying out reactions which are favored by high temperatures, require substantial energy inputs and, in addition, may involve reactants that are corrosive and difficult to contain. These advantages are due to the direct conversion of electrical energy to heat within the reacting system.

Johnson (8) was among the first to describe the characteristics and potential applications of the electrofluid reactor. He noted that Ohm's Law was obeyed except at high voltages where arcing occurred in the bed. Johnson and his co-workers have obtained patents on a number of processes which utilize the electrofluid reactor (9-15). These include processes for the manufacture of hydrocyanic acid, carbon disulfide, carbon monoxide and titanium tetrachloride.

The only report of a commerical application of an electrofluid reactor is in a process to produce hydrocyanic acid. In this process a bed of coke is fluidized with a mixture of ammonia and a hydrocarbon gas.

Goldberger, Hanway, and Langston (2) have reported development work on the electrofluid reactor. They suggested that its major potential uses lie in 1) the metallurgical field, 2) the chemical industry, particularly in organic chemical processing, and 3) as a high temperature gas heater. They found that the system could be rapidly heated and had excellent control properties.

A number of investigators have measured fluidized bed resistivities (3, 5, 6, 17, 20). They have concluded that the current flows along continuous chains of conducting particles. The bed resistivity increases with increasing gas velocity for settled beds. It passes through a maximum just after the incipient fluidization velocity is reached, and then decreases somewhat to a fairly constant value with further increase in gas flow rate.

Reed and Goldberger (20) studied the resistance of a fluidized bed of graphite. They found that the fluidized-bed behaved as a resistor element and that its resistance could be written as

$$R = \rho \cdot \frac{l}{A}$$

where ρ = resistivity

l = length of current path

A = cross-sectional area of current path.

Factors that caused break-up of particle chain linkages, such as vibration of the bed, were found to increase bed resistance. Arcing was observed at high current densities, greater than 2 amps per square inch, but did not affect the bed resistance in the range of variables investigated. These investigators observed a deviation in the voltage profile near the electrode and attributed this to the contact resistance. This resistance was strongly influenced by the condition of the electrode surface.

Apparatus

The apparatus consisted essentially of a batch-type, fluidized-bed reactor and a gas feeding and recycle system. The gas system could supply either steam or nitrogen or a mixture of these gases to the reactor at a measured but manually controlled rate. Nitrogen was used for fluidization during start-up and warm-up periods and in experiments where the basic characteristics of the system were being investigated. Steam, of course, was fed during the coal char gasification experiments. Since nitrogen is relatively expensive, a system was constructed to allow recycling of the nitrogen.

Figure 1 shows the equipment associated with the gasification experiments. Distilled water was fed at a constant rate through a calibrated, constant volume Zenith gear pump. It was vaporized in a double pipe heat exchanger and the resulting steam was conducted into the reactor.

The reactor was made of 4-in.-diam, 446 stainless steel pipe and is shown in more detail in Fig. 2. It was operated at atmospheric pressure. The steam entered the bottom of the reactor through a distributor. Both a porous Alundum plate and a capped, stainless steel pipe with four 1/8-in. holes drilled in it were used as gas distributors. Each of these was covered with a layer of ceramic pellets. The steam reacted with the carbon in the bed and the off-gases left at the top of the column. A sightport was situated at the top of the reactor, and a thermocouple well of Kanthal alloy projected into the bed from the bottom.

The reactor wall served as one electrode for internally heated runs and was grounded. The other electrode entered the bed through the top cover plate of the reactor and extended 12 in. into the unfluidized bed. It was centered in the reactor by a tube whose inside diameter was only slightly greater than the outside diameter of the electrode. This outside tube extended about 2 ft into the reactor.

An external furnace was provided to keep the outside wall of the reactor at the temperature of the bed so as to minimize heat losses. Kanthal tubular furnace elements and associated insulating materials were used to construct the external furnace.

The off-gases from the reactor first passed through a Pall Corporation high temperature, sintered, stainless steel filter where any entrained particles were removed. They were then cooled to about 50°F in a double pipe heat exchanger and any entrained moisture was removed in a knockout drum. The gases were then metered in a dry gas meter and vented to the atmosphere through a compressed air ejector.

Samples of the off-gases were withdrawn after the knockout drum and analyzed in a gas chromatograph. Provision was also made to take the dew point of the gases at this point.

A variable voltage transformer was used to manually control the voltage, and hence the temperature, in the reactor. An isolation transformer was installed in the line between the incoming power and the Variac. This allowed the reactor wall to be grounded.

Materials

Two different coal chars were used during this study. Five runs were conducted using a Rock Springs coal char supplied by the FMC Corporation from its COED process (18). The original coal came from the Rainbow No. 7 Mine of the Gunn-Quealy Coal Company, and was processed in a multistage fluidized-bed pyrolysis system using four levels of temperature, 600, 860, 990 and 1600°F. Three runs were made with a char produced from a Pittsburgh seam, high volatile bituminous coal. This material was supplied by the Institute of Gas Technology and was a hydrogasifier residue.

An analysis of the chars is shown in Table I and Table II shows the weight-size distribution of the two chars. The minimum fluidizing velocity of the FMC char between 1500 and 2000°F was about 0.0015 lb/min (0.024 ft/sec) of steam, while for the IGT char at 1600°F it was 0.0026 lb/min (0.0415 ft/sec).

Procedure

The reactor was first charged with coal char. A settled bed height of about 20 in. was used. The reactor was heated to the desired temperature using the external Kanthal heaters. During this time, nitrogen was circulated through the system. When the bed temperature reached the desired level, current was allowed

Table I. Analysis of coal chars.

Proximate analysis, wt %	FMC char	IGT char
Moisture	–	1.6
Volatile matter	4.0	2.9
Fixed carbon	89.8	79.1
Ash	6.2	16.4
Ultimate analysis, wt %		
Carbon	88.0	79.6
Hydrogen	1.0	1.21
Nitrogen	1.6	0.46
Sulfur	0.8	1.42
Oxygen	2.4	0.66
Ash	6.2	16.65
Ash to carbon ratio	0.071	0.209
Surface area		
Sq meters/g	40.0	500.0

(a) Proximate analysis on dry basis.

Table II. Differential screen analysis of chars.

Tyler mesh size	Wt % FMC char	Wt % IGT char
Greater than 20	5.3	15.8
20/28	12.6	22.4
28/35	12.2	21.0
35/48	16.4	15.3
48/65	16.6	12.4
65/100	15.4	7.9
100/150	11.3	2.4
150/200	6.1	2.4
Less than 200	3.6	0.5

to flow through the reactor. The power to the external heaters was then reduced to a low level. After the temperature of the bed had stabilized, the vent line was opened and the pressure at the outlet of the reactor was adjusted so that it was slightly less than atmospheric. The steam flow was then started. During the course of the run, the external heaters were adjusted to hold the wall of the reactor at a temperature near that of the bed. It was hoped that this would prevent any significant heat losses from the reactor.

During a run, the bed temperature, the off-gas flow rate, and the steam flow rate were recorded. The bed temperature was measured by the thermocouple in the bed, while the steam flow rate was calculated from the speed of the gear pump. The average off-gas flow rate was calculated from the amount of gas passing through a dry test meter in a known period of time. This rate did not include any unreacted steam as this was removed from the system before the meter. The off-gas was analyzed with the on-line chromatograph.

The current, voltage, and power supplied to the reactor were also noted. The voltage and power were measured directly on the appropriate type of electrical meter. The current varied in a rapid and erratic manner due to variations in the bed density. Therefore, the current was calculated using the measured voltage and power.

Results

Some results of a typical run which utilized fluidized bed resistance heating are shown in Figs. 3 and 4. This run was made at 1700°F with FMC char. The off-gas flow rate and composition remained essentially constant during most of the run. This was the case in all runs, even those in which all of the steam was not reacting. After 85 to 90 percent of the original carbon had reacted, the off-gas rate began to decrease. The amount of carbon dioxide and hydrogen in the gas began to increase at this point, while the percentage of carbon monoxide decreased. The percent of carbon gasified, then, increased at a constant rate during most of the run.

The resistance, current and voltage remained constant for a time after the start of the run, as shown in Fig. 4. Eventually the resistance of the bed began to increase, necessitating an increase in the voltage applied to the bed and causing a decrease in the current flow. The power input was fairly constant throughout the run. The trends exhibited in Fig. 4 are typical of the data collected in all of the runs. However, the resistance of the bed began to increase earlier in the runs made with IGT char than in those made with FMC char.

Table III summarizes the internally heated runs. Column 1 lists the eight runs and column 2 shows the type of char used. The operation of the electrofluid reactor was investigated at various temperatures and several steam flow rates and these are shown in columns 3 and 4. As noted previously, the reactor was operated in a batch-wise manner and the number of hours of operation are shown in the next column. Five electrode materials were tested, and these appear in column 6.

Column 7 shows the amount of char charged to the reactor. An initial bed height of 20 in. was used in each run and this was obtained by using either 2000 g of FMC char or 1000 g of IGT char. The next four columns give the amount of char left in the reactor and filter after the run, and its carbon composition. The char in the filter is material that was entrained in the off-gas during the course of the run. It contains a fairly high percentage of carbon and apparently is mostly fines from the original charge. In the next column is reported the percent of the original carbon that was gasified. This was calculated from the results in the previous five columns.

Column 13 shows the total amount of water removed from the off-gas in the knock-out drum during the course of the run. This was essentially all of the unreacted water since the gases contained very little water vapor beyond this point. The average fraction of the entering water being converted in the reactor is reported in column 14. The value listed was measured during the portion of the run when the off-gas rate was relatively constant (see Fig. 3).

Table III. Summary of internally heated runs.

Run number	Source of char	Bed temp (°F)	Steam flow rate (lb/min)	Hours ran	Electrode material	Char charged (g)	Char residue Reactor wt (g)	Char residue Reactor wt % (C)	Char residue Filter wt (g)	Char residue Filter wt % (C)
10	FMC	1500	0.0085	10.5	Carbon	2044	1433	88.7	27	79.8
11	FMC	1600	0.0085	7.5	Copper	1917	1232	89.8	20	89.4
9	FMC	1700	0.0085	9.8	Carbon	1967	191	58.5	114	88.1
13	FMC	1900	0.0085	8.0	Tungsten	2000	234	59.9	123	71.8
7	FMC	1960	0.0085	9.8	Carbon	2136	205	52.0	158	90.0
24	IGT	1600	0.0245	6.3	Carbon	1000	456	59.0	42	61.7
25	IGT	1600	0.0245	8.0	Tantalum	1000	320	44.0	76	69.2
28	IGT	1600	0.0245	6.0	Molybdenum	1000	459	62.6	50	78.2

Carbon gasified (%)	H_2O condensed (g)	Avg fraction of H_2O converted	Off-gas produced (SCF)	Avg off-gas rate (SCF/min)	Avg off-gas composition (vol %) H_2	CO	CO_2
27	1514	0.34	90.2	0.12	57	15	23
33	676	0.60	85.7	0.19	59	20	19
88	156	1.00	222.0	0.41	53	46	1
87	0	1.00	220.5	0.39	54	41	1
87	0	1.00	240.5	0.43	54	45	1
62	2763	0.25	74.1	0.19	57	17	26
75	3562	0.27	85.2	0.11	57	30	11
58	1467	0.65	39.2	0.11	58	23	16

The total off-gas produced during the run, excluding any unreacted water, and the average rate of production of off-gas are shown in the next two columns. The average off-gas rate is the rate during the period when it was relatively constant. The average composition of the off-gas is shown in the last three columns. Again, this is the composition during the time when the off-gas rate was constant. As can be seen, the off-gas was generally 50 to 60 percent hydrogen. At 1500°F there were equal amounts of carbon monoxide and carbon dioxide present. As the temperature was increased, the concentration of carbon dioxide in the off-gas decreased, and above 1700°F the off-gas contained less than one percent CO_2. The gas also contained very small amounts of methane and nitrogen which are not shown in the Table.

The energy losses from the reactor were large despite the fact that the external heaters were used. The energy supplied to the reactor via internal heating was 4 to 8 times the amount required by the reaction and that needed to heat the steam to the reactor temperature.

Discussion of Results

Rate of Reaction

Both the FMC and IGT chars gave about the same off-gas rate at 1600°F. This indicates that they are about equally reactive since the off-gas rate is an indication

of the reaction rate in runs in which all of the steam is not consumed. Also, since the off-gas rate was fairly constant throughout all the runs, the reaction rate apparently increased with carbon burn-off for both chars. The data shown below from run 24 bear this out.

Carbon burn-off (%)	Specific gasification rate $\left(\frac{\text{lb C gasified/hr}}{\text{lb C in bed}}\right)$
7.6	0.12
19.2	0.12
29.7	0.14
39.2	0.15
48.1	0.17
57.1	0.21

Other investigators have reported a similar increase in specific gasification rate with carbon burn-off (4, 16).

The gasification rates for the FMC and IGT chars are similar to those found in other studies where a low temperature char was gasified in a fluidized bed. May, et al. (19), obtained gasification rates at 1600°F between 0.05 and 0.12 lbs of carbon per hour per lb of carbon in the bed, while Goring, et al. (4), reported values between 0.07 and 0.10.

To determine if the passage of electric current through the bed affected the reaction rate, and hence off-gas rate, a few runs were made with external heating alone. These runs are summarized in Table IV along with the appropriate internally heated runs. The data indicate that any effect of internal heating was small as the variations between runs at the same conditions, except for method of heating, were of the order of 20 to 30 percent. These variations are similar to those found between runs using the same heating method and are within experimental error.

Table IV. Comparison of externally and internally heated runs.

Run no.	Type of heating	Bed temp (°F)	Steam flow rate (lb/min)	Hours ran	Char to bed (g)	Carbon gasified (%)	Off-gas produced (SCF)	Average off-gas rate (SCF/min)
10	INT	1500	0.0085	10.5	2044	27	90.2	0.12
15	EXT	1500	0.0085	51.5	2009	74	255.5	0.10
11	INT	1600	0.0085	7.5	1917	33	85.7	0.19
17	EXT	1600	0.0085	22.0	2005	91	289.5	0.23
24	INT	1600	0.0245	6.3	1000	62	74.1	0.19
25	INT	1600	0.0245	8.0	1000	75	85.2	0.11
28	INT	1600	0.0245	6.0	1000	58	39.2	0.11
26	EXT	1600	0.0245	8.3	1000	51	40.6	0.09

Electrical Properties

As noted, the resistance, current and voltage remained constant for a time after the start of each run. During this time, the resistance between the center electrode and the wall was about 3 ohms. It then began to increase slowly and reached a value between 8 and 10 ohms near the end of the run. This increase in bed resistance was probably caused both by an increase in the resistivity of the bed material as the carbon content of the particles was depleted, and by a decrease in bed height. (This decrease in height decreased the contact area between the electrode and bed.) As the resistance of the bed increased, the current flowing through the bed decreased. Therefore, to maintain a constant power input to the reactor, the voltage had to be increased. The data do show that the power input to the reactor was fairly constant. In some of the runs, the power required decreased late in the run as the reaction rate decreased. The resistance also increased at this point to a value near 30 ohms.

The behavior of the bed resistance during the runs resembled the variation of bed resistance measured as a nonconductor is added to a bed of conducting material (1, 21). In this latter case, fluidized beds containing 50 percent or more of nonconducting material had to be prepared before the resistance of the original graphite bed was greatly increased. Concentrations of nonconducting material greater than 50 percent caused the bed resistance to increase rapidly and nonlinearly.

The increasing concentration of the nonconducting ash, then, is one of the causes of the rise in the fluidized bed resistance. However, there is a large variation between runs in the ash to carbon ratio in the bed at the point that the bed resistance began to increase (see Table V). (The increase referred to here occurred at about 410 minutes for run 9.)

Table V. Ash to carbon ratios at time that bed resistance began to increase.

Run	Carbon burn-off (%)	Ash to carbon ratio in bed
7	54	0.16
9	66	0.23
11	23	0.09
13	46	0.13
24	29	0.29
25	31	0.30
28	17	0.25

Examination of the current and voltage plots indicate that the power factor for the system was near one. It should also be noted that although the current tended to fluctuate rapidly, no difficulties were experienced in controlling the power supplied to the reactor. This meant that the temperature of the reactor was held quite constant.

Electrode Materials

Six different electrode materials (0.5 in. diam) were tried during the course of the study. Figure 5 shows some of the electrodes used with the FMC char. Those shown are:

Electrode A: 446 stainless steel pipe, used at 1900°F for 1.5 hrs. The end melted off.

Electrode B: Copper pipe, used at 1600°F for 2.7 hrs. The pipe corroded badly and finally melted.

Electrode C: Carbon rod, used at 1960°F for 10 hrs (run 7). The attack on the rod was slight. However, all the steam was being reacted in this run.

Electrode D: Tungsten rod, used at 1900°F for 8 hrs (run 13). This electrode was not attacked. However, 100 percent of the steam was being converted.

Figure 6 shows three electrodes used in internally heated beds of IGT char. The electrodes, from top to bottom, are tantalum, carbon and molybdenum rods. Each of these rods were used in runs at 1600°F for between 6 and 8 hrs (runs 24, 25 and 28). Both the tantalum and carbon rods were severely attacked and each suffered about a 25 percent weight loss. The molybdenum rod did not lose any weight.

A rough coating was formed on the electrodes used with the IGT char. This can be seen on the carbon and molybdenum rods in Fig. 6. This coating appears to be at least partly ashy material and did not form when FMC char was used. Presumably the higher ash content of the IGT char accounts for the formation of the coating. A second run was made with the molybdenum rod at the same conditions. The overall resistance between the electrodes did not change and, despite the coating, no difficulties were encountered in using the rod.

The copper and stainless steel pipes (electrodes A and B in Fig. 5) both melted at bed temperatures well below their melting points. Evidently, the electrodes were at least several hundred degrees hotter than the bed. The temperature difference between the electrode and bed was measured as a function of the power input to the reactor and gas flow rate and the results are shown in Fig. 7. The electrode temperature was measured with a shielded thermocouple which was inserted into the ½-in. stainless steel pipe that served as the electrode during this run. Ceramic insulators were placed between the thermocouple and the electrode. The bed temperature was held constant at 1500°F during the run and was fluidized with nitrogen.

The temperature difference increased with power input almost linearly between 0 and 4 kilowatts. The gas velocity did not seem to have a significant effect on the temperature difference. The exact reason for the temperature difference is as yet unknown.

Conclusions and Future Work

The investigation to date has shown that it is technically feasible to gasify coal char with steam in an electrofluid bed reactor. The production rate of synthesis gas was high and operating temperatures in the range of 1600 to 1800°F seem feasible. The resistance of the fluidized bed of coal char allowed use of reasonable applied voltages and temperature control of the reactor was not a problem.

The investigation is being continued and a 12-in.-diam, continuous reactor is being constructed to further study and develop the process. This reactor will be 32 in. high and will operate at temperatures approaching 2000°F. Coal char will be fed to the reactor with a Vibrascrew feeder and solids will be removed from the bottom of the bed and/or through an overflow tube. The electrode arrangement in this reactor will be similar to the one previously used, although another arrangement may be used at a later date. During operation of the continuous reactor, attention

will also be given to methods of power control and to the development of suitable electrodes.

Acknowledgment

This work was supported by the Engineering Research Institute, Iowa State University, through funds made available by the Office of Coal Research, U.S. Department of Interior under contract No. 14-01-0001-479.

Literature Cited

1. Damm, F., "Electrical Resistivity of Fluidized Beds of Conducting and Non-Conducting Particles." Chemical Engineering Department, Iowa State University, Ames, Iowa (May 24, 1965).

2. Goldberger, W. M., Hanway, J. E., Jr., and Langston, B. G., CEP 61, 63 (Feb 1965).

3. Goldschmidt, D. and LeGoff, P., Chem. Eng. Sci. 18, 805 (1963).

4. Goring, G. E., Curran, G. P., Tarbox, R. P. and Gorin, E., Ind. Eng. Chem. 44, 1051 (1952).

5. Graham, W. and Harvey, E. A., Can. J. Chem. Eng. 13, 146 (June 1965).

6. Ibid., 14, 17 (1966).

7. Huebler, J. and Schora, F., CEP 62, 87 (Feb 1966).

8. Johnson, H. S., Can. J. Chem. Eng. 39, 145 (1961).

9. Johnson, H. S. Electrothermic Fluidized Bed Apparatus. U.S. Patent 3,006,838 (Oct 31, 1961).

10. Johnson, H. S. and Andersen, A. H., Process for Preparation of Hydrocyanic Acid. Canadian Patent 573,348 (March 31, 1959).

11. Ibid. Process for Preparation of Carbon Monoxide. U.S. Patent 2,921,840 (Jan 19, 1960).

12. Ibid. Process for the Preparation of Titanium Tetrachloride. U.S. Patent 2,948,587 (August 9, 1960).

13. Ibid. Process for Preparation of Hydrocyanic Acid. U.S. Patent 2,958,584 (Nov 1, 1960).

14. Ibid. Process for Preparation of Carbon Disulfide and for the Desulfurization of Coke. U.S. Patent 3,009,781 (Nov 21, 1961).

15. Johnson, H. S. and Reid, J. Process for Preparation of Carbon Disulfide. U.S. Patent 3,034,863 (May 15, 1962).

16. Jolley, L. J. and Pohl, A., J. Inst. Fuel 26, 33 (1953).

17. Jones, A. L., "Electrical Resistivity of Carbon Granules in a Fluidized Bed." Unpublished Ph.D. Thesis. Library, Iowa State University, Ames (1966).

18. Jones, J., Eddinger, R. T. and Seglin, L., CEP 62, 73 (Feb 1966).

19. May, W. G., Mueller, R. H., Sweetser, S. B., Ind. Eng. Chem. 50, 1239 (1958).

20. Reed, A. K. and Goldberger, W. M., Chem. Eng. Progr. Symposium Ser. No. 67, 62, 71 (1966).

21. Schakel, L., "Electrical Resistivity of Fluidized Beds of Conducting and Non-Conducting Particles." Chemical Engineering Department, Iowa State University, Ames (August 14, 1964).

22. Von Fredersdorff, C. G. and Elliott, M. A., Chemistry of Coal Utilization, H. H. Lowry, Ed., John Wiley and Sons, New York, 1963, Supplementary Volume, pp. 892-1022.

23. Walker, P. L., Jr., Rusinko, F., Jr., and Austin, L. G., Advances in Catalysis, O. D. Eley, P. W. Selwood, and P. B. Weisy, Ed., Academic Press, Inc., New York, 1959, Vol. XI, pp. 133-221.

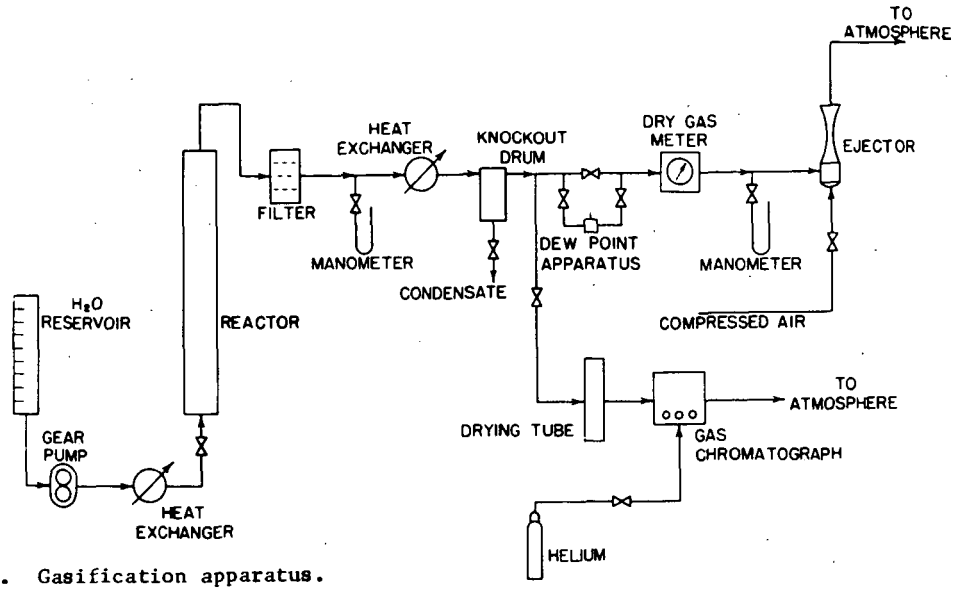

Fig. 1. Gasification apparatus.

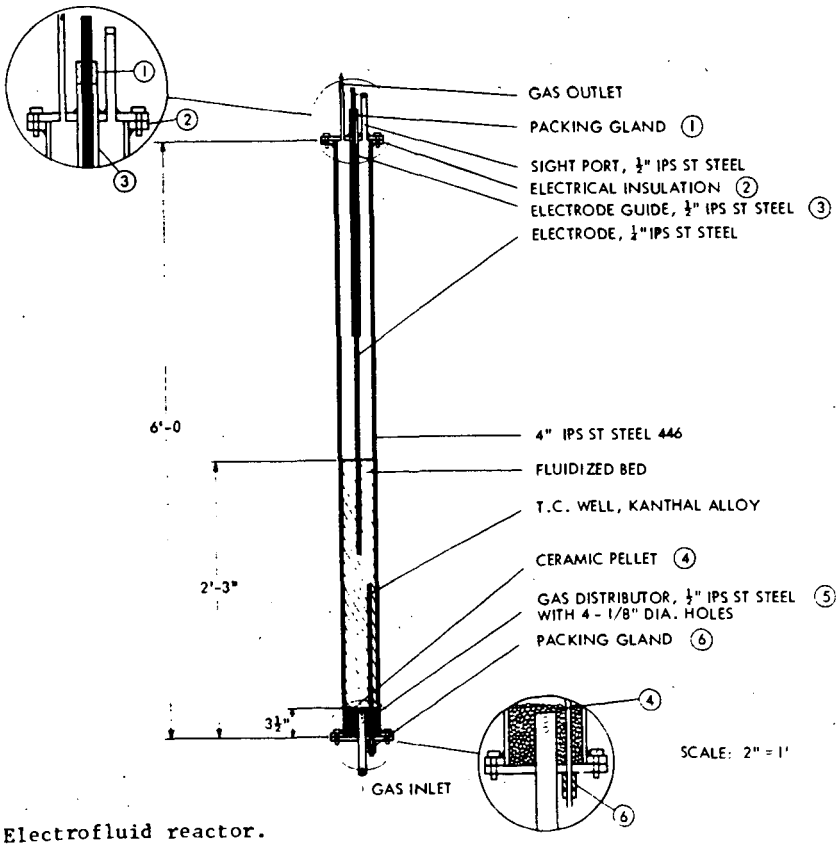

Fig. 2. Electrofluid reactor.

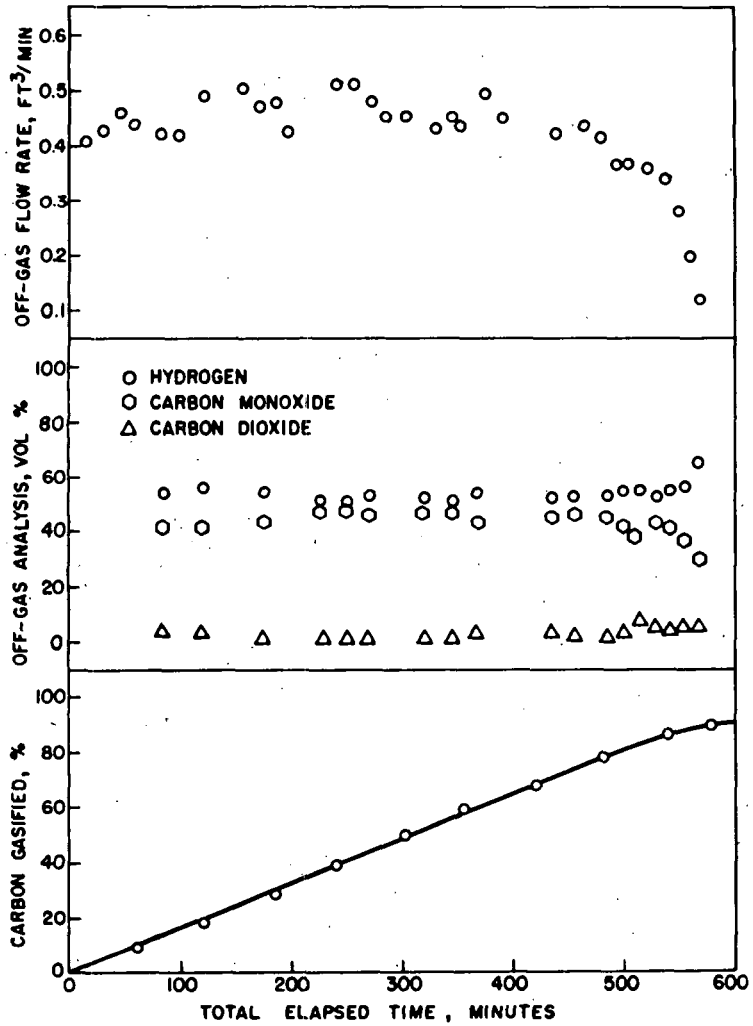

Fig. 3. Off-gas flow rate and composition and percent carbon gasified during Run 9.

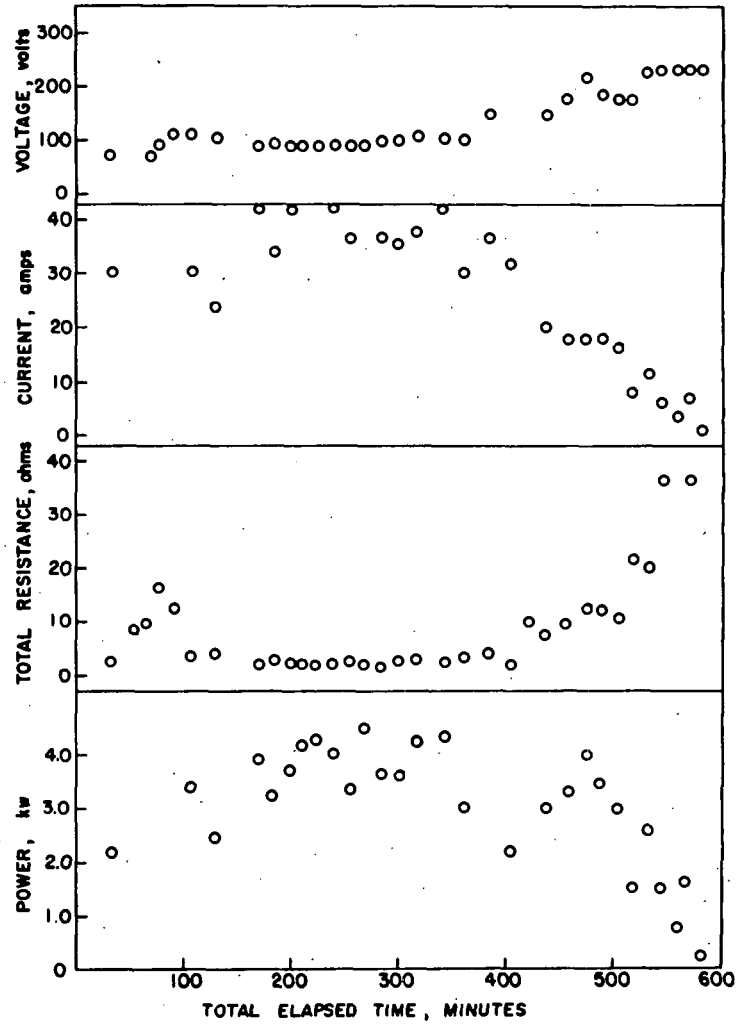

Fig. 4. Electrical properties of system during Run 9.

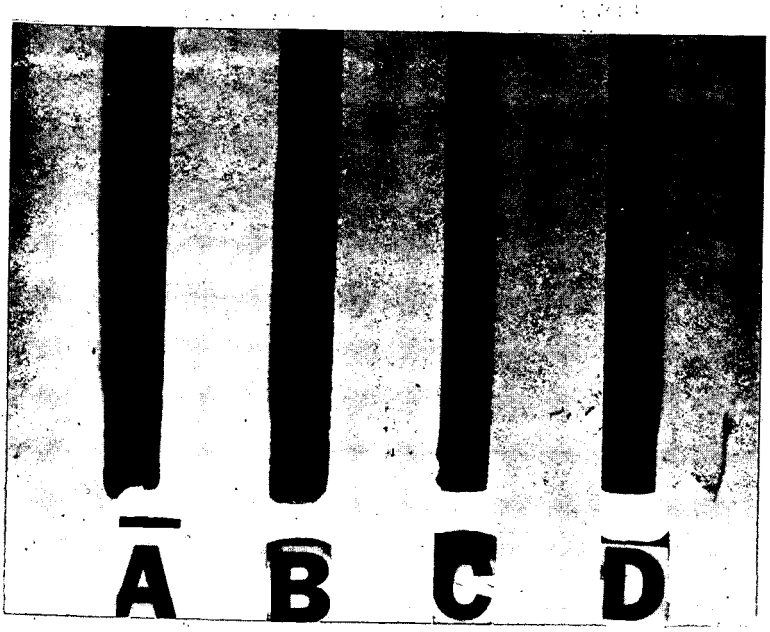

Fig. 5. Electrodes used with FMC char.

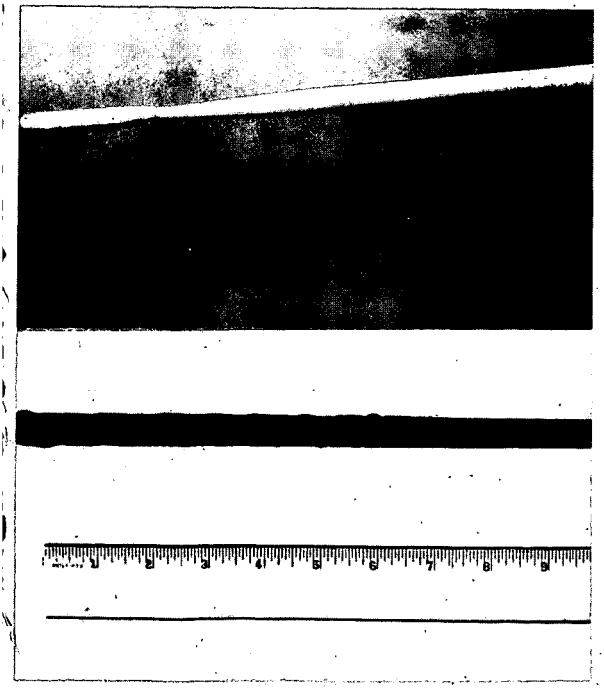

Fig. 6. Electrodes used with IGT char.

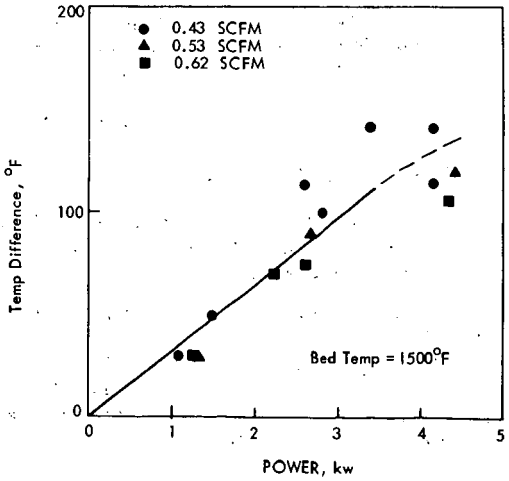

Fig. 7. Temperature difference between bed and electrode.