THE NEW COPROCESSING PILOT PLANT AT CANMET'S ENERGY RESEARCH LABORATORIES

J.D. Chase and D.D.S. Liu

Energy Research Laboratory, CANMET
c/o 555 Booth St.
Ottawa, Canada K1A 0G1

I. INTRODUCTION

Canada's large deposits of heavy oil and coal and their proximity warrants the development of coprocessing technology. Coprocessing involves treating a slurry of coal in heavy oil, bitumen or resid with high pressure hydrogen with or without other reducing gas between 400°C and 500°C. Under these conditions coal liquefies and the coal-derived liquids together with the heavy oil hydrocrack to lighter materials.

The advantages of coprocessing over coal liquefaction have been known for some time and and bench-scale research in coprocessing has been underway at CANMET since about 1980. (1,2,3). The bench-scale experiments have indicated a considerable economic potential for the simultaneous processing of coal and bitumen. To develop this process to a stage where it can be evaluated with confidence for further scale-up to demonstration size, the construction of a half-tonne per day pilot plant was initiated.

Whereas the bench-scale facilities are being used to investigate the effect of the process variables on the product yields and quality in short experimental runs, the large pilot plant will be used to solve problems that normally result from long experimental runs lasting up to 60 days. Further, the pilot plant will be able to generate more accurately yield data that is not normally possible with smaller bench scale units, and will enable the production of the much larger quantities of products needed for the detailed assessments required for commercialization.

This paper describes the coprocessing pilot plant which is now being commissioned at CANMET's Energy Research Laboratories.

II. PROCESS DESCRIPTION

(a) Design Basis

- Nominal space velocity of 1.0 reactor volumes/h (1.0 LHSV)
- Feed slurry concentrations of coal from 5 to 50 wt %
- Hydrogen recycle rate of 200 L/h at 15°C (13.9 MPa)
- Pressure capability to 21 MPa (≈3000 psi)
- Reactor temperature to 500°C.

(b) Description of Flow Diagram

The coal from producers will be ground and dried in a new coal preparation unit. This facility handles coal up to 0.63 cm (1/4 in.) in size and up to 60% moisture to produce up to 227 kg/h of dry coal (maximum 10% moisture) at a maximum particle size of 74 μm (-200 mesh). The dried coal is put in 45 gallon drums with plastic liners and sealed to exclude moisture. The ground coal is then mixed with heated heavy oil in tanks. After mixing with the recycled gas stream containing the the desired concentration of hydrogen, the hot feed slurry is pumped through a preheating section into the reactor which will be maintained at the desired reaction temperature by electrical heaters (Fig.1). The temperature profile in the reactor is measured and controlled by external heaters. Provision has been made for introduction of other process monitors such as pressure transducers and densitometers.

The effluent from the reactor is fed to a high temperature high pressure separator from which a heavy oil product (containing any undissolved coal) is withdrawn. The overhead are then fed to a low temperature-high pressure separator from which a light oil is collected. The gas is then fed to the scrubbing section which removes gaseous hydrocarbons, as well as gaseous nitrogen and sulphur compounds. This scrubbed H_2 stream is then recycled after addition of fresh make-up hydrogen to the recycle gas and then mixed with slurry entering the preheater. Off-gas streams from the product let-down systems will be measured and analyzed.

The feed and the two liquid product streams are weighed continuously, then samples of the product are distilled and analyzed. Considering the flowrates used and the accuracy in measurement, a good mass balance can be expected.

III. PILOT PLANT - ASSEMBLY OF SUB-SYSTEMS

(a) Slurry Preparation Section

The slurry preparation system consists of two tanks, two slurry recirculation pumps and two recirculation loops 4 and 50 m long respectively. The internal pipe size in these loops is 3.81 cm. Since the slurry viscosity is very dependent on temperature, the piping and tanks are equipped with heaters. The length of the larger loop was determined according to the location of the slurry preparation area, i.e., some distance from the main processing area. The high pressure reciprocating feed pump in the process area is fed by part of the recirculating slurry at one end of the large loop. The shorter loop is used for circulating slurry in the other tank when it is not in use, or when the slurry is being prepared from coal and heavy oil. Figure 2 shows a photograph of the slurry area.

Sizing of lines and the power required for recirculating the slurry were estimated for the linear velocity required to prevent settling of coal particles based on Spell's equation (4). The system was designed so that either recirculation pump could be used with either tank in the event of failure during operation. This flexibility along with other characteristics of the long loop make it ideal for the study of mixing phenomena, or in the absence of other data, a means for determining slurry viscosity from known flow and pressure drops.

During slurry preparation, the coal and heavy oil contacting will be done by: (a) an agitator within the tank, (b) recycle flows through the 4 m loop or (c) the use of an eductor within the short loop.

In the coal liquefaction literature interesting rheological behaviour is described where the temperature - viscosity relationship indicates the presence of a gel at certain temperatures (5). Since similar rheological characteristics may be encountered with coal/heavy oil slurries the preheater section has numerous temperature and pressure sensors for monitoring the rheology and flow control (6).

(b) Reactors

The pilot plant has two tubular reactors. One has a 18-L capacity, is 7.62 cm in diameter and is 3.937 m long. The other has a 10-L capacity, is 5.08 cm in diameter and is 4.876 m long. Also there is a 10-L continuous stirred tank reactor (CSTR).

The reactors and separators were designed to accommodate instruments for studying fluid dynamics and for changing reactor geometry. Reactor configuration can be altered to study residence time distributions under various conditions.

The maximum L/D ratio for the tubular reactors is 96. The ratio can be reduced by using one of many holes in the wall as the outlet. The reactors can be connected in various ways for different experiments including multi-step processes. Combinations of CSTR and tubular reactors with various L/D ratios will enable the study of the effect of the degree of mixing on the coprocessing reaction for a wide range of Peclet numbers. Such data are often required to develop or verify scale-up models (7).

The hydrodynamic phenomena of slurry bubble columns at high temperatures and pressures are not well understood. Consequently our experience derived from the use of gamma-ray interrogation techniques during CANMET's development of hydrocracking processes will be applied to coprocessing (8). Figure 3 shows the gamma-ray scanner which will be modified slightly for this new system.

The many thermocouples and sampling systems in the three reactors have resulted in complex instrumentation. This complexity is illustrated in the piping and instrument diagram shown in Fig. 4. The sampling system involves metering control valves and this is seen in the photograph in Figure 5.

(c) Product Separation

It is necessary to separate the products in the reactor effluent. The design of the hot and cold separators was based on experience obtained from hydrocracking of vacuum tower bottoms or bitumen. Although no difficulty is anticipated in the discharge of undissolved coal solids, the efficient removal of solids from reactor effluent is likely to warrant further study. Extra vessels or solids separation equipment can easily be connected to the bottom of the high temperature separator.

The gases from the cold separator initially will be scrubbed by a water and oil scrubber. These scrubbers were designed for investigation of mass transfer. Effective gas clean-up will be required if coprocessing plants are built. Eventually absorbant liquids other than water and oil will be studied.

(d) Gamma-Ray Densitometer

Techniques have been successfully developed for the study of hydrodynamic phenomena in hydrocracking reactors using gamma-ray densitometry. The techniques measure the spatial and temporal void fractions, flow regimes, and bubble size distributions in the reactor (6). These techniques which were developed in our laboratories, contribute to the development, scale-up and successful operation of a large scale Canadian hydrocracking process. The application of gamma-ray densitometry in solid sedimentation is being developed. All of these techniques will be incorporated in the new coprocessing pilot plant. The dotted vertical line in Fig. 4 represents the track for the gamma-ray densitometer.

IV. COMPUTERIZED PROCESS MONITORING SYSTEM

The plan is to have the pilot plant controlled by dedicated controllers. All plant data are collected and stored by a computerized data acquisition and process monitoring system. Field sensors such as thermocouples and pressure gauges are wired to remote processing units (RPU) which perform analogue to digital conversion and translate the sensor output to engineering units. The signals from the RPU are then sent to a plant computer which can display data in various formats including mimics, historical trends and alarm indication. All points are scanned every 10 seconds on average. The plant computer sends all data every minute to the central computer that keeps all the information on a hard disk. Minute and hourly averages are stored for up to 60 days and written every hour to tape. The data stored by the central computer can be recalled for trends, plots and reports. The central system handles data from three separate pilot plants. As a precaution, 60 of the most important points are also recorded on multichannel strip chart recorders. Those points recorded by the computer are shown in Fig. 4 by a circle within a square.

V. REFERENCES

1. Kelly, J.F., Fouda, S.A., Rahimi, P. and Ikura, M. "CANMET Coprocessing: A Status Report", in Proc. of Coal Conversion Contractors Review Meeting, Nov. 14-16, 1984, Calgary, Canada, Editor J.F. Kelly, CANMET, Energy, Mines and Resources, pp. 397-423 (1984).

2. Fouda, S.A., Ikura, M. and Kelly, J.F. "Coprocessing of Canadian Lignites and Bitumen"; Division Report 84-44(OPJ); Preprints of the Spring National Meeting of the A.I.Ch.E., March 24-28, 1985, Houston, Texas.

3. Rahimi, P.M., Fouda, S.A., and Kelly, J.F. "Coprocessing using H_2S as a Promoter", Fuel, Vol. 66, Sept. 1987, 1215.

4. Spells, K.E. Trans. Inst. Chem. Engrs. (London) Vol. 33, No. 2, pp. 79-82, 1955.

5. Thurgood, J.R., Hanks, R.W. and Youngblood, E.L. "The Rheologiocal Characterization of Coal Liquefaction Preheater Slurries", A.I.Ch.E. J., Vol. 28, No. 1, Jan. 1982, p. 111.

6. Liu, D.D.S., Hall, S.S. and Patmore, D.J. "Pulsing Flow through Small Tubes and Orifices: Simulation of Pressure Drop in Hydrocracking Pilot Plant", Submitted to the 38th CSChE. Conference at Edmonton, Alberta, Oct. 2-5, 1988.

7. Levenspiel, O., "Chemical Reaction Engineering", Second Edition Chapter 9, John Wiley and Sons Inc., 1972.

8. Liu, D.D.S., Patmore, D.J., and Lipsett, J.J. "Hydrodynamic Behaviour of Gas-Liquid Two-Phase Flows at Elevated Temperature and Pressures", Proceedings of the 35th Canadian Chemical Engineering Conference at Calgary, Alberta, Oct. 6-9, 1985, p.43.

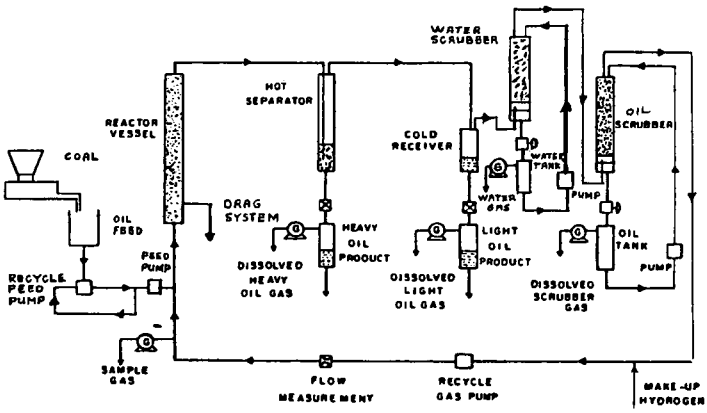

FIGURE 1. SCHEMATIC FLOW SHEET OF COPROCESSING PILOT PLANT

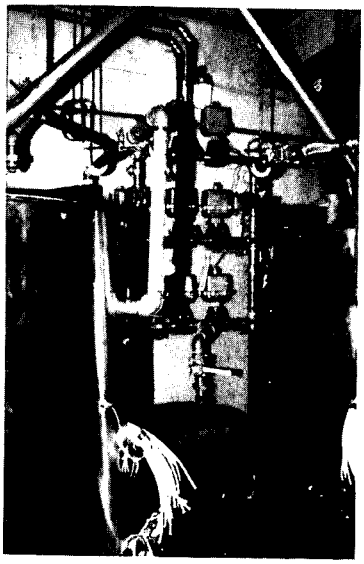

FIGURE 2. PHOTOGRAPH OF SLURRY PREPARATION AREA

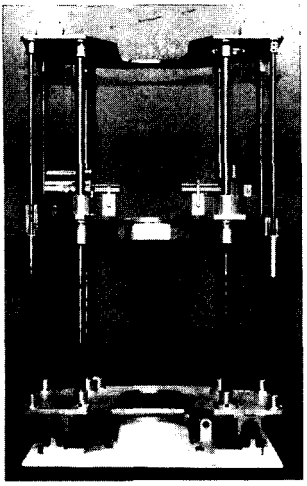

FIGURE 3. GAMMA-RAY SCANNER

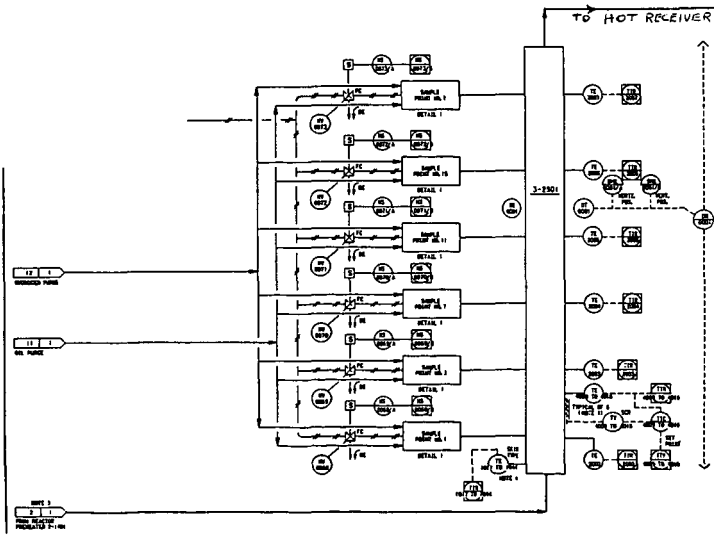

FIGURE 4. PARTIAL P&ID OF TUBULAR REACTOR

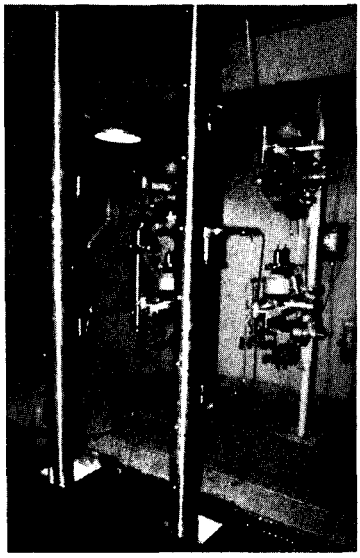

FIGURE 5. PHOTOGRAPH OF TUBULAR REACTOR